Z315E, Z325E, Z320M, Z330M, Z320R, Z330R, Residential ZTrak™ Serial Number 10001-

JOHN DEERE

OPERATOR'S MANUAL

Z315E, Z325E, Z320M, Z330M, Z320R, Z330R, Residential ZTrak™

OMUC31576 ISSUE G2 (ENGLISH)

CALIFORNIA

Proposition 65 Warning

Diesel engine exhaust and some of its constituents are known to the State of California to cause cancer, birth defects, and other reproductive harm.

If this product contains a gasoline engine:

⚠ WARNING

The engine exhaust from this product contains chemicals known to the State of California to cause cancer, birth defects or other reproductive harm.

The State of California requires the above two warnings.

John Deere Power Products
North American Edition
PRINTED IN U.S.A.

jdservicemanual.com

Introduction

Thank You for Purchasing a John Deere Product

We appreciate having you as a customer and wish you many years of safe and satisfied use of your machine.

MX00654,000020B-19-10MAY17

Using Your Operator's Manual

Read this operator's manual, watch the safety video, https://www.deere.com/en/parts-and-service/safety/ and review the safety signs on your machine before use. They all contain important safety information and operating instructions that must be followed to help keep you and others safe. Be sure everyone who uses the machine has read the manual, reviewed the safety signs, and knows how to use the machine safely and properly.

Your machine was designed and built to be operated in accordance with all the safe operating instructions. Since it was designed to cut grass, it can amputate hands and feet and throw objects. If you do not follow safety instructions, serious injury or death can occur.

This operator manual is organized in sections to help you find information quickly. You can use this manual to find answers to many of your operating and servicing questions. An index at the end of this book helps you find needed information quickly. Contact your dealer if this manual does not answer your questions.

Before using your machine:

- Know how to operate the machine. The Operating Controls section helps you understand the controls of your machine and what they do.
- Prepare your machine and the mowing area by performing required daily checks outlined in the General Instructions section.
- Follow instructions in the Preventing Injuries section, especially related to:
  - Keeping children safe by following instructions in the Protect Children section.
  - Avoiding injury on slopes and near terrain hazards by following instructions in the Operating on Slopes and Near Terrain Hazards section.
  - Follow the instructions in the Avoid Thrown Objects section and keep all guards in place, including discharge chute.
  - Cleaning machine during use and before storing as outlined in the Prevent Fires section.
- Understand how to service and inspect your machine.

If you do not understand the instructions or have questions, contact your dealer.

The machine shown in this manual can differ slightly from your machine.

RIGHT-HAND and LEFT-HAND sides are determined by facing in the direction that the machine travels when going forward. When you see a broken line (------), the item referenced is hidden from view.

Before delivering this machine, your dealer performed a predelivery inspection to ensure best performance.

This manual is an important part of your machine. Keep this manual with the machine when you sell it.

mk71445,1654877011782-19-10JUN22

Spark Arrestor

The California Public Resources Code, Section 4442.5 provides as follows:

No person shall sell, offer for sale, lease, or rent to any person any internal combustion engine subject to Section 4442 or 4443, and not subject to Section 13005 of the Health and Safety Code, unless the person provides a written notice to the purchaser or bailee, at the time of sale or at the time of entering into the lease or rental contract, stating that it is a violation of Section 4442 or 4443 to use or operate the engine on any forest-covered, brush-covered, or grass-covered land unless the engine is equipped with a spark arrestor, as defined in Section 4442, maintained in effective working order or the engine is constructed, equipped, and maintained for the prevention of fire pursuant to Section 4443. Cal. Pub. Res. Code 4442.5. Other states or jurisdictions may have similar laws. A spark arrestor for your machine may be available from your authorized dealer. An installed spark arrestor must be maintained in good working order by the operator.

OUO2005,00006F6-19-19MAY19

Special Messages

Your manual contains special messages to bring attention to potential safety concerns and machine damage, as well as helpful operating and servicing information. Please read all the information carefully to avoid injury and machine damage.

CAUTION: Avoid injury! This symbol and text highlight potential hazards or death to the operator or bystanders that may occur if the hazards or procedures are ignored.

IMPORTANT: Avoid damage! This text is used to tell the operator of actions or conditions that might result in damage to the machine.

NOTE: General information is given throughout the manual that may help the operator in the operation or service of the machine.

MX00654,000020D-19-05JUN17

Parts

We recommend John Deere quality parts and lubricants, available at your John Deere dealer.

When you order parts, your John Deere dealer needs the serial number or product identification number (PIN) for your machine or attachment. These are the numbers that you recorded in the Product Identification section of this manual.

Order Service Parts Online

Visit **https://partscatalog.deere.com/jdrc/** for your Internet connection to parts ordering and information.

TC00531,00000E9-19-17MAY22

Service Literature

If you would like to purchase a copy of the Parts Catalog or Technical Manual for this machine, visit The John Deere Technical Information Store at:

https://techpubs.deere.com/

or call:

- **U.S. & Canada:** 1-800-522-7448.
- **All Other Regions:** Your John Deere dealer.

TH84124,0000199-19-29JUN22

Contents

Introduction 2
Product Identification 3
Safety Labels with Text 4
Safety Labels without Text 7
Safety 9
Machine Cleanout 12
Operating Controls 14
Operating 14
Service Intervals 25
Service Lubrication 25
Service Engine 26
Service Transmission 33
Service Mower 35
Service Electrical 45
Service Miscellaneous 46
Troubleshooting 49
Storage 51
Specifications 52
Warranty 54
John Deere Quality Statement 57
Service Record 58
Slope Gauge 59
Index 60

Original Instructions. All information, illustrations and specifications in this manual are based on the latest information available at the time of publication. The right is reserved to make changes at any time without notice.

COPYRIGHT © 2022
DEERE & COMPANY
Moline, Illinois
All rights reserved.
Previous Editions
Copyright © 2020

Product Identification

Record Identification Numbers

Zero-Turn Mowers

When you contact an Authorized Service Center for information on servicing, always provide the product model and identification numbers.

Locate the model and serial number for the machine, engine, and transmission/transaxle of your machine and record the information in the spaces provided as follows.

DATE OF PURCHASE:

_____

DEALER NAME:

_____

DEALER PHONE:

_____

APY536232—UN—25APR22

Product Identification Number (A):

— — — — — — — — — — — — — — — — —

Engine Serial Number:

On engine blower housing.

— — — — — — — — — — — — — — — — —

Transaxle Serial Numbers (B):

S/N tag on forward side of each transaxle housing.

LEFT SIDE:

— — — — — — — — — — — — — — — — —

RIGHT SIDE:

— — — — — — — — — — — — — — — — —

GH8XT3T,00008E4-19-01MAY22

Register Your Product and Warranty Online

To register your product through the Internet, simply go to www.JohnDeereWarrantyRegistration.com. Completing the information, either online or with the product warranty card, will ensure that your product will receive all post sales, service, and important product information.

MP47322,00F45FF-19-17MAY22

Safety Labels with Text

Safety Label Location

APY69554—UN—08JUN22

A—WARNING M146577
B—DANGER M118610
C—DANGER, WARNING, CAUTION UC31082
D—DANGER M139128
E—DANGER M89504
F—CAUTION UC31403

GH8XT3T,000090A-19-09JUN22

Understanding the Machine Safety Labels

MXAL42363—UN—22MAY13

The machine safety labels shown in this section are placed in important areas on your machine to draw attention to potential safety hazards. DANGER or WARNING safety labels are located near specific hazards.

The operator's manual also explains any potential safety hazards whenever necessary in special safety messages that are identified with the word, CAUTION, and the safety-alert symbol.

On your machine safety labels, the words DANGER, WARNING, and CAUTION are used with this safety-alert symbol. DANGER identifies the most serious hazards:

- DANGER; The signal word DANGER indicates a hazardous situation which, if not avoided, will result in death or serious injury.
- WARNING; The signal word WARNING indicates a hazardous situation which, if not avoided, could result in death or serious injury.
- CAUTION; The signal word CAUTION indicates a hazardous situation which, if not avoided, could result in minor or moderate injury. CAUTION may also be used to alert against unsafe practices associated with events which could lead to personal injury.

Replace missing or damaged safety labels. Use this operator's manual for correct safety label placement.

There can be more safety information contained on parts and components sourced from suppliers that is not reproduced in this operator's manual.

French or Spanish Safety Labels and Operator's Manual

Operator's manuals and safety labels with content in French or Spanish are available for this machine through authorized John Deere dealers. See your John Deere dealer.

NOTE: Both text and no-text labels are shown. Your machine is only equipped with one of these types of labels.

MP47322,00F4601-19-26OCT21

WARNING

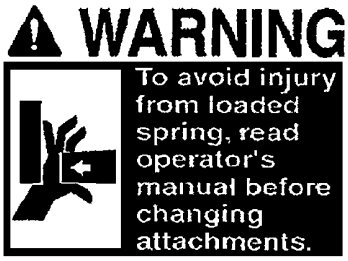

MXAL42769—UN—09APR13

To avoid injury from loaded spring, read operator's manual before changing attachments.

TH84124,000017E-19-28OCT16

DANGER

MG512220—UN—08JUN21

ROTATING BLADE

Do not put hands or feet under or into mower when engine is running.

MG39705,00005BA-19-09JUN21

DANGER

APY538839—UN—07JUN22

ROTATING BLADES CUT OFF ARMS AND LEGS

- Do not mow when children or others are around.
- Do not mow in reverse.
- Look down and behind before and while backing.
- Look in the direction the machine is traveling.
- Never carry children even while blades are off

gh8xt3t,1654610361314-19-07JUN22

WARNING

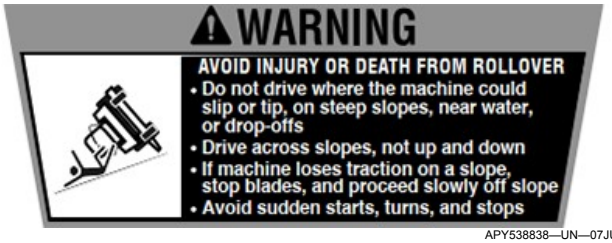

APY538838—UN—07JUN22

AVOID SERIOUS INJURY OR DEATH FROM ROLLOVER

- Do not drive where the machine could slip or tip, on steep slopes, near water, or drop-offs.
- Drive across slopes, not up and down.
- If machine loses traction on a slopes, stop blades, and proceed slowly off slope.
- Avoid sudden starts, turns, and stops.

gh8xt3t,1654610546072-19-13JUN22

CAUTION

APY538837—UN—07JUN22

- Read operator's manual and watch safety video.

- Keep safety devices (guard, shield and switches) in place and working.
- Pick up objects that can be thrown by blades.
- When leaving machine:
  - Set park brake
  - Turn off machine
  - Remove Key

gh8xt3t,1654611253838-19-09JUN22

CAUTION

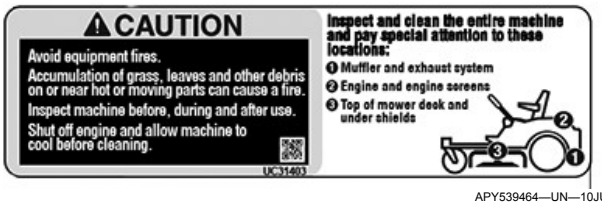

APY539464—UN—10JUN22

- Avoid Equipment fires.
- Accumulation of grass, leaves and other debris on or near hot or moving parts can cause a fire.
- Inspect machine before, during and after use.
- Shut off engine and allow machine to cool before cleaning.

Inspect and clean the entire machine and pay special attention to these location:

1. Muffler and exhaust system
2. Engine and engine screens
3. Top of mower deck and under shields

gh8xt3t,1654880564263-19-10JUN22

DANGER

MXAL42773—UN—09APR13

To avoid injury from rotating blades and thrown objects:

Keep hands and feet away from rotating blades. Keep bystanders a safe distance away. Do not operate mower without discharge chute or entire grass catcher in place.

TH84124,000017F-19-01NOV16

DANGER

MXT008505—UN—01NOV16

ROTATING BLADE

DO NOT PUT HANDS OR FEET UNDER OR INTO MOWER WHEN ENGINE IS RUNNING.

THROWN OBJECTS

BEFORE MOWING, CLEAR AREA OF OBJECTS THAT MAY BE THROWN BY BLADE.

DO NOT OPERATE MOWER WITHOUT DISCHARGE CHUTE OR ENTIRE GRASS CATCHER IN PLACE.

TH84124,0000162-19-01NOV16

Safety Labels without Text

Safety Label Location

APY69555—UN—31MAR22

A—WARNING - M146611
B—DANGER - M118041
C—DANGER - M136436
D—DANGER, WARNING, CAUTION - UC31438
E—DANGER - M138631
F—DANGER - M173018
G—CAUTION - UC26989

GH8XT3T,00008E7-19-09MAY22

jdservicemanual.com

Understanding the Machine Safety Labels without Text

TCT005498—UN—11SEP12

At several important places on this machine, safety signs are affixed which signify potential danger. The hazard is identified by a pictorial in a warning triangle. An adjacent pictorial provides information on how to avoid personal injury. These safety signs, their placement on the machine, and a brief explanatory text are shown in this Safety section.

There can be additional safety information contained on parts and components sourced from suppliers that is not reproduced in this operator's manual.

MX00654,0000389-19-26OCT21

Avoid Injury from Loaded Spring

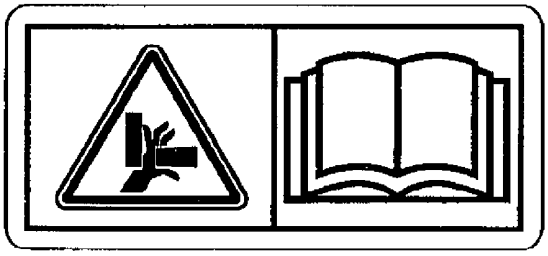

MXAL42777—UN—09APR13

- Keep fingers and hands away from pinch point.
- Read operator's manual.

MX00654,000038C-19-24APR19

Avoid Injury from Rotating Blades

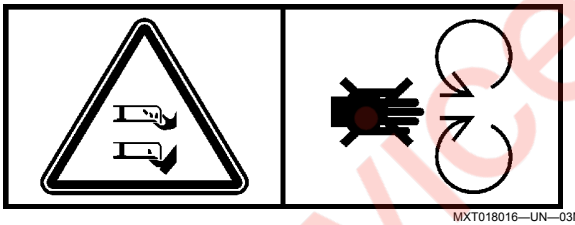

MXT018016—UN—03MAY16

- Do not put hands or feet under or into mower when engine is running.
- Do not operate mower without discharge chute/deflector or entire grass catcher in place.

MX00654,0000392-19-24APR19

Avoid Injury from Getting Caught in Belts

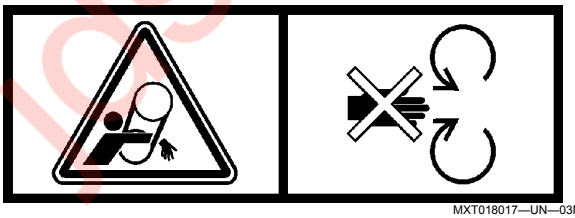

MXT018017—UN—03MAY16

- Stay clear of moving belts.
- Do not operate machine without shields in place.

MX00654,0000391-19-24APR19

Read Operator's Manual

MXT013479—UN—05MAR15

- This operator's manual contains important information necessary for safe machine operation.
- Carefully read operator's manual before operating machine. Observe all safety rules to avoid accidents.

TH84124,0000173-19-12JUN15

Keep Children Away from Mower

MXT013480—UN—05MAR15

- Mower can cause dismemberment or death.
- Stay a safe distance from the machine.
- Make sure that children stay clear of mower at all times when the engine is running.

TH84124,0000174-19-12JUN15

Avoid Injury From Tipping

APY538840—UN—07JUN22

- Do not drive where machine could slip, tip, or rollover.
- In some configurations, do not drive or operate on a slope of more than 10 degrees.
- Refer to the Operating on Slopes section for more information.

gh8xt3t,1654611616381-19-07JUN22

iqservicemanual.com

Avoid Injury from Equipment Fires

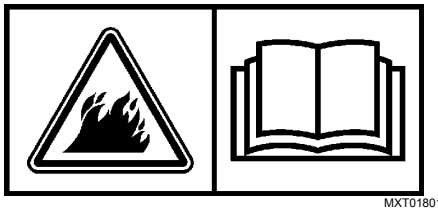

MXT018019—UN—04MAY16

- Avoid equipment fires.
- Accumulation of grass, leaves, and debris on or near hot or moving parts can cause a fire.
- Inspect and clean the entire machine before, during and after use.
- Shut off engine and allow machine to cool before cleaning.
- Carefully read operator's manual Machine Cleanout section for details.

MX00654,0000390-19-30MAR20

Avoid Injury from Thrown Objects

APY538841—UN—07JUN22

Use extreme care to avoid injury from thrown objects. Do not, under any circumstances, operate the mower-conditioner when other people are in the vicinity. Stones and other objects can be thrown very far by the rotating cutting blades.

The cutterbar curtains are very important to reduce the potential for thrown objects. Always keep these curtains down when operating the mower-conditioner. Replace the curtains if worn or damaged.

For additional operator protection from thrown objects, only use this mower-conditioner with a tractor equipped with a complete operator enclosure.

gh8xt3t,1654611841236-19-07JUN22

Safety

Use Your Mower Safely

General Instructions

- Read this operator's manual, watch the safety video, and review the safety signs on your machine before use. They all contain important safety information and operating instructions that must be followed to help keep you and others safe. Be sure everyone who uses the machine has read the manual, reviewed the safety signs, and knows how to use the machine safely and properly.
- Age, physical ability, and mental capacity can be factors in equipment-related injuries. Operators must be mentally and physically capable of operating the machine properly and safely. Never allow a child to operate the machine.
- Do not operate the machine while under the influence of alcohol or drugs or when distracted or fatigued. Proper operation requires your full attention.
- Always wear eye protection, hearing protection, close-fitting clothing, and substantial footwear while operating the machine. Never operate while wearing sandals or when barefoot.
- Do not wear radio or music headphones. Both safe operation and service require your full attention.
- Never tamper with safety devices.
- Operate the machine only in daylight or good artificial light.
- Only operate the engine in well-ventilated areas. Exhaust gasses contain carbon monoxide, a deadly poison.
- Never leave a running machine unattended.
- Look both ways when approaching roadways and use caution when turning around on public roadways. You can be struck by a vehicle and suffer serious injury or death.

Before Using Your Machine

- Know how to operate the machine. The Operating Controls section helps you understand the controls of your machine and what they do.
- Prepare your machine and the mowing area by performing required daily checks outlined in the General Instructions section.
- Follow instructions in the Preventing Injuries section, especially related to:
  - Keeping children safe by following instructions in the Protect Children section.
  - Avoiding injury on slopes and near terrain hazards by following instructions in the Operating on Slopes and Near Terrain Hazards section.
  - Follow the instructions in the Avoid Thrown Objects section, and keep all guards in place, including discharge chute.
  - Cleaning machine during use and before storing as outlined in the Prevent Fires section.
- Understand how to service and inspect your machine.

Inspection and Daily Checklist

- Inspect machine before you operate. Be sure that hardware is tight, and all guards and shields are in good condition and fastened in place. Make all necessary adjustments before you operate. Repair or replace damaged, badly worn, or missing parts.
- Visually inspect that mower blades, blade bolts, and the mower assembly are not worn or damaged. To prevent machine damage, replace worn or damaged blades and bolts in sets.
- Make sure that the fuel cap and air cleaner are in place before starting engine.

Fuel

- Use care when handling fuel. Fuel is flammable and fuel vapors can be explosive. Do not smoke when handling fuel. Only use an approved fuel container. Clean up spilled fuel immediately.
- Check fuel lines, tank, cap, and fittings frequently for cracks or leaks. Replace if necessary.

Check the Mowing Area

- Keep bystanders and pets out of the mowing area.
- Clear the area of objects such as rocks, wire, or toys, which can be thrown by the blades. Remove low-hanging branches or other obstacles, which can interfere with your travel path.
- Study the mowing area. Set up a safe mowing path. Do not mow where traction or stability is doubtful.
- Slopes and terrain hazards are major factors related to loss-of-control and tipover accidents. Operation on slopes and near terrain hazards requires extra caution. Follow instructions in the Operating on Slopes and Near Terrain Hazards section.

Weights and Attachments

- Some attachments require ballast weights. Follow recommendations for wheel weights or counterweights.
- Use only accessories and attachments approved by John Deere.

jdservicemanual.com

- If you do not understand the instructions or have questions, contact your dealer.

OUO2005,0000784-19-09MAR20

Preventing Injuries

Protect Children

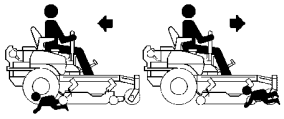

MXT005340—UN—06JUN13

- Children can be killed or seriously injured by riding mowers when operators do not follow safe operating practices.
- Do not mow in reverse. Operating with the mower engaged while backing up is discouraged.
- Never give children a ride on a mower or in a cart behind the mower, even when the blades are off. They can fall off and be run over or cut by the mower blades. Children can interfere with mower operation. Children who have been given rides in the past can suddenly appear in the mowing area for another ride. If you are not aware, they can be run over or backed over by the mower.
- Children are often attracted to lawn mowers and mowing activities, especially if they have been given rides before. They do not know if the blades are rotating or understand that they can be killed or seriously injured even if the blades are not rotating.
- Keep children indoors and out of the mowing area when the mower is being operated. Keep children under the watchful eye of a responsible adult, other than the operator. If there is not a responsible adult to ensure that children stay indoors, DO NOT mow.
- Be alert to the presence of children or others. Turn off the mower blades and stop the machine if someone enters the mowing area.
- Look in the direction the machine is traveling. Before and while backing, turn off the mower blades and look down and behind the machine carefully, especially for children.
- Use extreme care when approaching objects that block your view, such as blind corners, shrubs, or trees, especially while backing. They can hide a child.

Avoid Thrown Objects

- Clear the mowing area of all bystanders when using this machine. Thrown objects could cause serious injury or death.
- Clear the area of objects such as rocks, wire, or toys, which can be thrown by the blades.
- Never direct discharged material toward anyone.
- Avoid discharging material against a wall or obstruction such as a fence or retaining wall. Material can ricochet towards the operator.
- Avoid discharging material towards a street or roadway.
- Stop the blades when crossing gravel surfaces.

OUO2005,000078C-19-15FEB20

Operating on Slopes and Near Terrain Hazards

- Slopes are a major factor related to loss-of-control and tip-over accidents, which can result in serious injury or death. Use caution and common sense when operating on slopes.
- If you feel uneasy on a slope, do not mow or operate the machine on it.
- Mow across slopes, not up and down.
- Watch for holes, ruts, bumps, rocks, or other hidden objects. Tall grass can hide obstacles.
- Drive slowly so you do not have to stop while on a slope.
- Do not mow on wet grass. Tires can slip on wet grass even if the brakes are working normally.
- Keep all movement on slopes slow and gradual. Do not make sudden changes in speed or direction, which can cause the ride-on mower to roll over.
- If the tires lose traction, disengage the PTO and proceed slowly and carefully off the slope.
- Do not shift to neutral and coast downhill.

Identify Safe Slopes

- Before using your machine, measure slopes of all mowing areas to determine which slopes are safe for mowing with a ride-on mower. Use good judgment and common sense when performing this survey.

Measuring Slopes

- Suggested method 1: Lay a straight piece of sturdy lumber 1.2 m (4 ft) long on the slope and measure the angle with an angle gauge or protractor level.
- Suggested method 2: Refer to the slope gauge provided at the end of the manual.

Slope Limits

- Exceeding the recommended maximum slope angle increases the risk of rollover accidents that can result in serious injury or death.

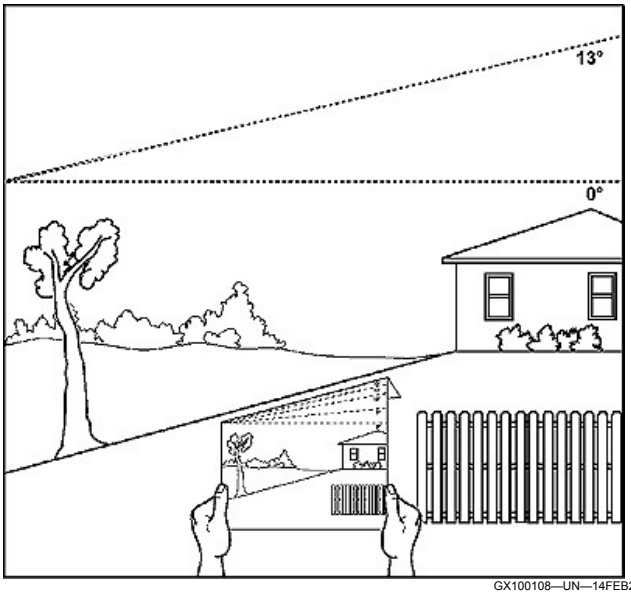

GX100108—UN—14FEB20

- Never mow or operate this ride-on mower on slope angles greater than 13° with ride-on mower in its basic configuration. The basic configuration is the ride-on mower with a mower deck and no other attachments. (A 13° slope is a slope that rises 1.4 m [4.6 ft] over a horizontal distance of 6.1 m [20 ft].)

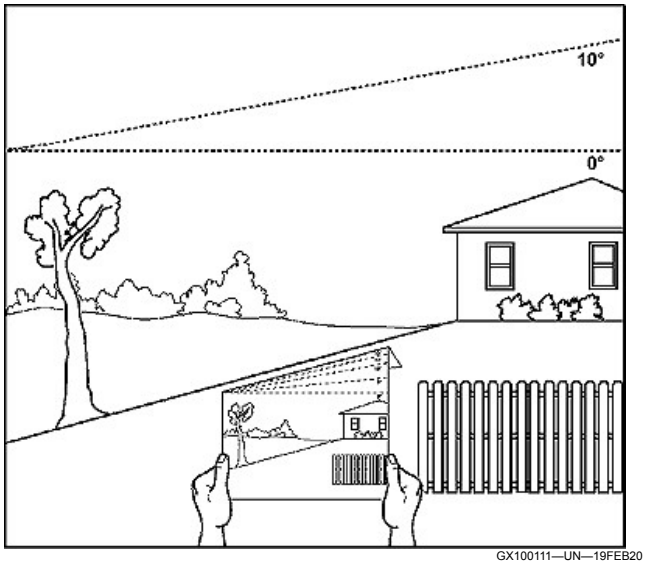

GX100111—UN—19FEB20

- Attachments such as material collection systems, weather enclosures, or other attachments increase the risk of a rollover. When using attachments, never mow or operate this ride-on mower on slope angles greater than 10°. (A 10° slope is a slope that rises 1 m [3.5 ft] over a horizontal distance of 6.1 m [20 ft].)
- The risk of rollover is low on slopes of 10° or less. As the slope angle increases to the recommended maximum, the risk increases to a medium level.

Operating Near Terrain Hazards

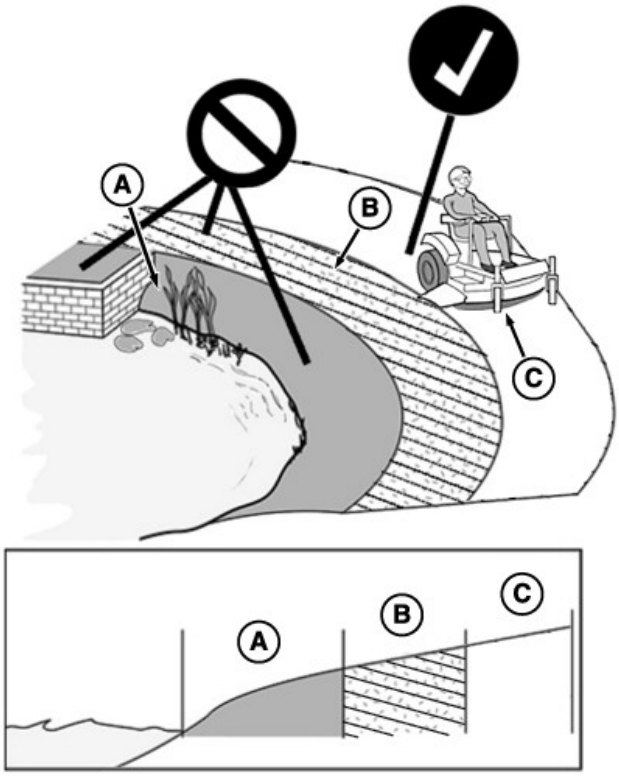

GX100105—UN—01FEB20

- Terrain hazards such as ditches and drop offs are a factor related to loss-of-control and tip-over accidents, which can result in serious injury or death. Use caution and common sense when operating near terrain hazards.
- Do not mow or operate the machine in areas adjacent to hazards that can cause the machine to roll over. If a wheel goes over an edge or if the edge breaks away, the machine can suddenly lose traction, slide, and/or roll over.
- Hazards (A) include but are not limited to ditches, drop-offs, embankments, or areas near bodies of water.
- Maintain a buffer area (B) at least as wide as the machine between hazards (A) and the mowing area (C). Do not mow or operate the machine in the hazard area or buffer area.
- Only mow or operate in the mowing area (C). Do not exceed the recommended slope operating angle. Refer to the Slope Limits section.

OUO2005,000078A-19-09MAR20

Prevent Fires

TS227—UN—15APR13

- Do not mow tall, dry grass or through piles of leaves. Combustible materials can contact hot components and increase the risk of fire.
- Debris can build up anywhere on the machine, especially on horizontal surfaces. While using your machine, periodically check for and remove debris, especially in dry or heavy debris conditions, such as when collecting leaves.
- After operating, completely remove any combustible materials from equipment before storing. Use compressed air, a leaf blower, or water to keep the machine clean.
- Allow machine to cool in an open area before storing. Do not park machine near flammable materials, such as straw, mulch, cloth, or chemicals. Do not park near an open flame or other sources of ignition, such as a water heater or furnace.
- Excess lubrication or fuel/oil leaks or spills on the machine can also provide collection sites for debris. Promptly cleaning up spills and repairing leaks reduces the potential for debris collection.
- Refer to the Machine Cleanout section for more information on checking for debris buildup and locations to inspect.
- Always park the machine safely before cleaning or servicing a machine. See the Parking Safely section.

OUO2005,0000787-19-15FEB20

Parking Safely

Always apply the park brake and remove the key before leaving the machine unattended. Children or others may attempt to move or operate an unattended machine.

- Stop the machine on a level surface.
- Disengage mower blades or other attachments.
- Lower attachments to the ground.
- Apply the park brake.
- Stop the engine.
- Remove the key.
- Wait for engine and all moving parts to stop before you leave the seat.

OUO2005,0000788-19-15FEB20

Additional Safety Information

Towing Loads Safely

- Stopping distance increases with speed and weight of towed load. Travel slowly and allow extra time and distance to stop.
- Total towed weight must not exceed Towing Capacity stated in Specifications of this manual.
- Excessive towed load can cause loss of traction and loss of control on slopes. Reduce towed weight when operating on slopes.
- Never allow children or others in or on towed equipment.
- Use only approved hitches. Tow only with a machine that has a hitch designed for towing. Do not attach towed equipment except at the approved hitch point.
- Towed equipment increases the risk of rollover on slopes. Refer to the Operating on Slopes and Near Terrain Hazards section for more information.
- Do not turn sharply. Use additional caution when turning or operating on adverse surface conditions. Use care when reversing.

Safe Transportation

Follow instructions in the Transporting Machine on Trailer section.

- Use a full-width loading ramp at least 30 cm (12 in) wider than the machine, never two separate ramps.

Service and Maintenance

- Proper service and maintenance of the machine is essential.
- Keep all parts in good condition, keep all nuts and bolts tight, and repair any damage immediately. Stop and inspect the machine immediately if you strike an object.
- Ensure that all safety devices, discharge chute, and grass catcher components are in good condition and replace when necessary.
- Understand service procedures thoroughly before working on the machine. If you do not understand the service procedures or are uncomfortable working in your machine, contact your servicing dealer.
- Disconnect the battery or all spark plug wires before servicing the machine. Disconnect negative terminal first and positive last. Install positive terminal first and negative last.
- Some components could have stored energy in springs or hydraulic components. Servicing procedures described in the Service section describe how to perform service and maintenance tasks safely.
- Support any machine elements that must be raised for service work. Use jack stands or service locks to support components when needed.

Disposing of Waste Products and Chemicals

- Waste products, such as used oil, fuel, coolant, brake fluid, and batteries can harm the environment and people.
- Do not use beverage containers for waste fluids – someone can mistakenly drink from them.
- A Safety Data Sheet (SDS) provides specific details on chemical products: Physical and health hazards, safety procedures, and emergency response techniques. The seller of the chemical products used with your machine is responsible for providing the SDS for that product.
- To learn how to recycle or properly dispose of waste products generated from service, see your local recycling center or authorized dealer. If you wish to discard the machine, contact your local recycling center or authorized dealer.

OUO2005,0000789-19-15FEB20

Machine Cleanout

General Cleaning Guidelines

Machine must be inspected periodically throughout the day. Buildup of debris must be removed to ensure proper machine function and to reduce the risk of fire. Frequency of these inspections and cleanings vary depending on a number of factors including operating conditions, machine configuration, operating speeds, and weather conditions. Inspections and cleanings may be required multiple times throughout the day particularly in dry, hot, and windy conditions.

IMPORTANT: Avoid fire! Regular and thorough cleaning of machine combined with other routine maintenance procedures listed in the Operator's Manual greatly reduce the risk of fire, downtime, and improve machine performance.

Besides proper maintenance the condition of the material being handled is the most significant factor contributing to fires. Dry, light, and fluffy materials that can create a dust cloud are the most likely to catch fire. Debris can accumulate in various areas especially on horizontal surfaces. Conditions such as wind speed and direction can change where the material accumulates. Be aware of these changing conditions and adjust your cleaning schedule and practices to ensure proper machine function and to reduce the risk of fire.

Always follow all safety procedures posted on the machine and in the Operator's Manual. Before carrying out any inspection or cleaning, always park machine safely. (See Parking Safely in the Safety Section).

The entire machine should be inspected, with extra attention given to the areas noted below.

OUMX068,0001043-19-03NOV21

Cleanout Areas

Primary areas that must be inspected and cleaned on the machine include (see machine service label):

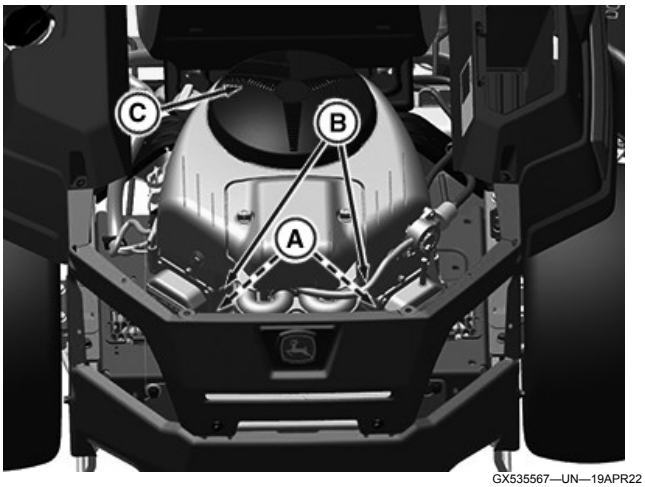

GX535567—UN—19APR22

1. Muffler components (A):
   - exhaust manifold
   - muffler pipes
   - muffler
   - muffler shield
2. Engine cooling fins (B) and intake screens (C).

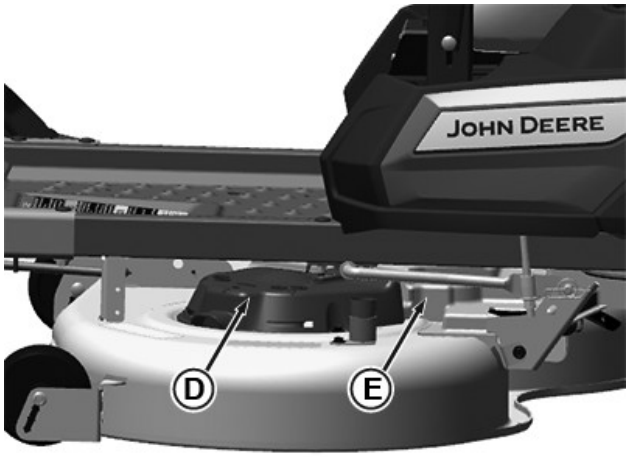

APY536701—UN—29APR22

3. Top of the mower deck, under shields (D), including spindle and belt area (E).

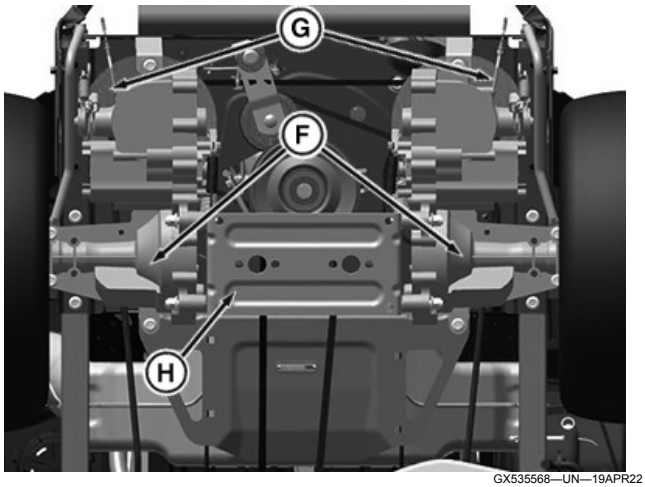

GX535568—UN—19APR22

4. On or near transaxles (F), belt drives, and fins (G) and cross-strap bracket (H).

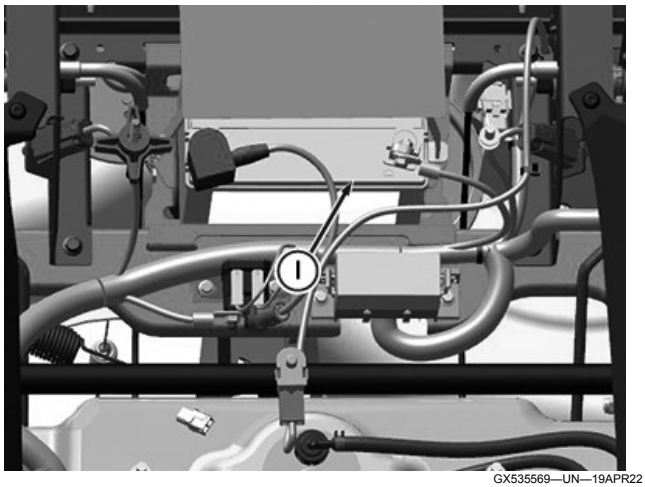

GX535569—UN—19APR22

5. Under the seat, including battery (I), and wiring harness.

GH8XT3T,00008CB-19-29APR22

Operating Controls

Operator's Station Controls

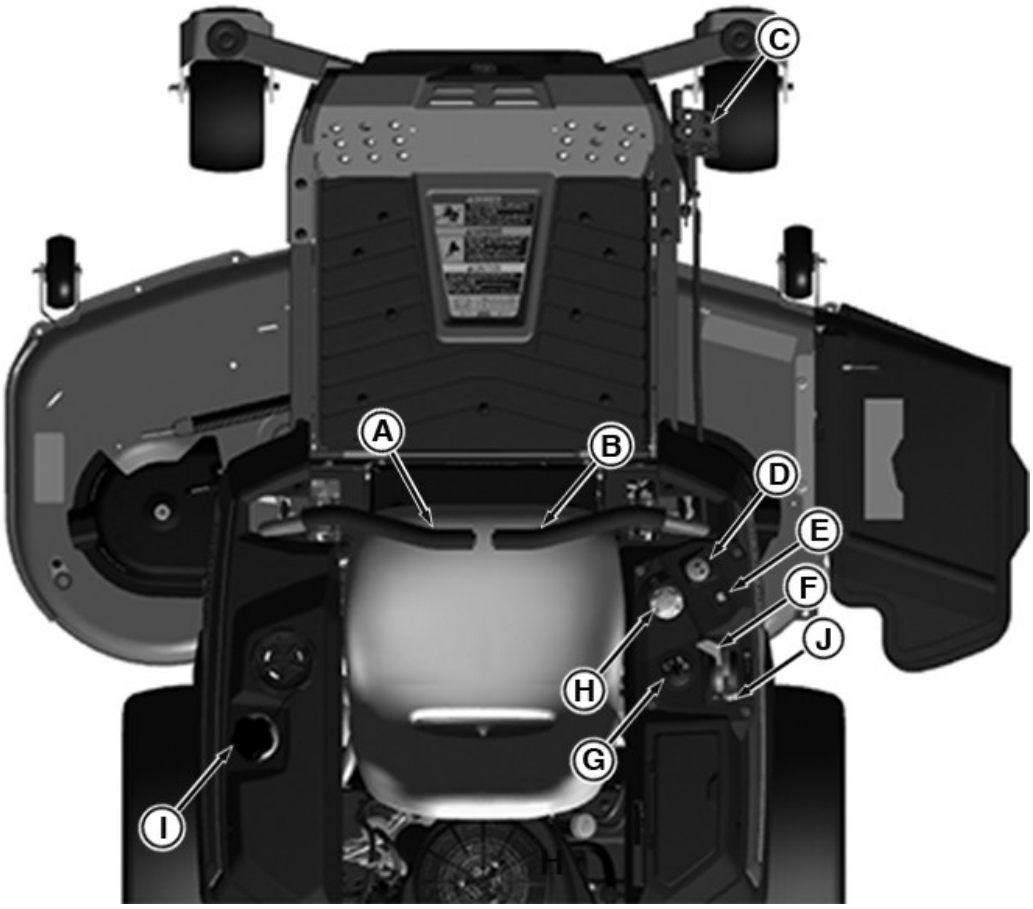

APY538561—UN—07JUN22

Operator's Station Controls for Model Z330R

A—Left Motion Control Lever
B—Right Motion Control Lever
C—Mower Deck Lift Pedal (if equipped)
D—Mower Engagement Switch
E—Hour Meter
F—Throttle Control Lever
G—Key Switch
H—Height-of-Cut Dial Adjustment
I—Fuel Tank Cap
J—Choke Lever (if equipped)

GH8XT3T,00008B6-19-09JUN22

Operating

Daily Operating Checklist

☐ Check engine oil.
☐ Clean muffler area, air intake screens, and mower deck.
☐ Check brake system.
☐ Check fuel level.
☐ Check under the machine for leaks.
☐ Check safety interlock system.
☐ Check tire pressures.
☐ Check mulch control open/close operation (if equipped).
☐ Clean mower deck using the washout port after use.

H9PQBYK,000003F-19-12APR22

Avoid Damage to Plastic and Painted Surfaces

- Do not wipe plastic parts until they are rinsed first. Using a dry cloth causes scratches.
- Insect repellent spray damages plastic and painted surfaces. Do not spray insect repellent near machine.
- Be careful not to spill fuel on the machine. Fuel damages surfaces. Wipe up spilled fuel immediately.
- Prolonged exposure to sunlight damages some surfaces.

MP47322,00F4630-19-15APR19

Mounting and Dismounting Machine

GX536018—UN—25APR22

NOTE: Do not step on the mower deck when mounting and dismounting the machine.

1. Mount the machine from the side using the foot plate (A).
2. Park machine safely before dismounting (See Parking Safely in the Safety section.)
3. Keep the foot plate clean.

H9PQBYK,0000060-19-25APR22

Adjusting Seat

Adjustable Seat

1. Tip seat forward.

APY69543—UN—25FEB22

2. Remove the knob (A).
3. Slide seat forward or backward to the desired position.
4. Reinsert the knob (A).

GH8XT3T,00008C6-19-18APR22

Adjusting Motion Control Levers

1. Park machine safely. (See Parking Safely in the Safety section.)

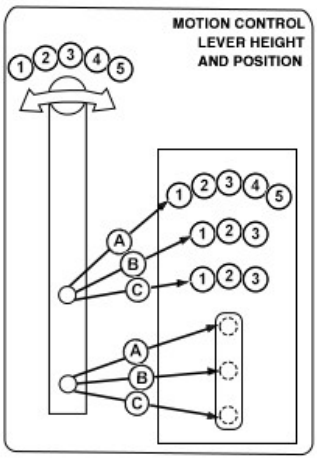

APY536236—UN—08JUN22

2. To adjust the motion control lever height, refer to the operator instruction label on the machine front panel and the instructions that follow.

GX535570—UN—19APR22

3. Remove two bolts and nuts and raise or lower each control lever to your comfort level.
   - For highest lever position, use holes (A).
   - For lowest lever position, use holes (B).
4. You can also adjust each motion control lever slightly forward or rearward (C) within slotted holes.

GH8XT3T,00009CB-19-13JUN22

Adjusting Cutting Height

Cutting height can be adjusted from approximately 31—114 mm (1.25—4.5 in). Refer to the control lever label on the front platform.

1. Park machine safely. (See Parking Safely in the Safety section.)
2. Inflate tires to the correct pressure. (See tires in the Specifications section.)

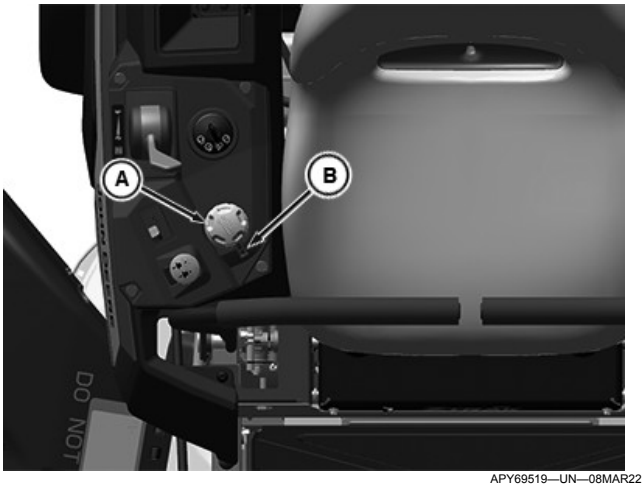

APY69519—UN—08MAR22

3. Rotate dial (A) counterclockwise to raise mower deck height.
4. Rotate dial (A) clockwise to lower mower deck height.
5. Rotate dial (A) to index mark (B) to desired mower deck height.

GH8XT3T,00008AE-19-13JUN22

Adjusting Mower Level

CAUTION: Avoid injury! Rotating blades are dangerous.

Before adjusting or servicing mower:

- **Disconnect spark plug wires or battery negative (—) cable to prevent engine from starting accidentally.**
- **Always wear gloves when handling mower blades or working near blades.**

NOTE: Mower deck wheels should not contact the ground when leveling the deck.

1. Park machine safely. (See Parking Safely in the Safety section.)
2. Inflate tires to the correct pressure. (See tires pressure in the specifications section.)
3. Position caster wheels to the forward driving position.
4. Set mower to preferred cutting height, and lower deck into the mowing position.
5. Measure mower level (side-to-side).

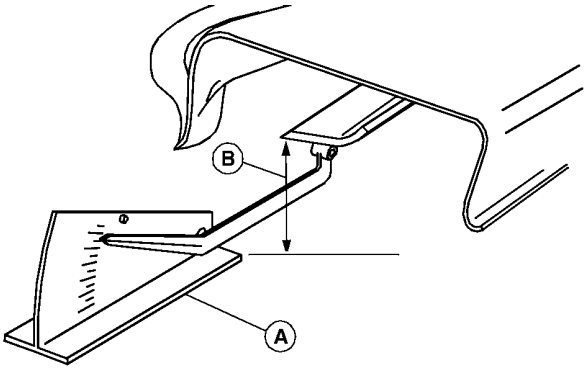

MXAL42797—UN—09APR13

A convenient leveling gauge (A) (AM130907) is available from your dealer.

a. Position mower blades as follows and measure from each outside blade tip (B) to the level surface.

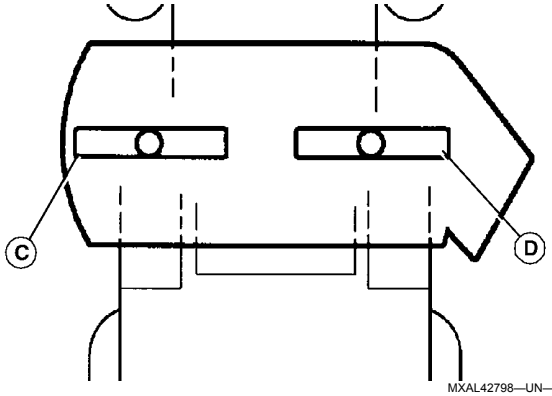

MXAL42798—UN—09APR13

b. Turn left blade (C) as shown. Hold belt and turn the right blade (D) as shown. Take measurement for both blades.

The difference between blade measurements must not be more than 3 mm (1/8 in).

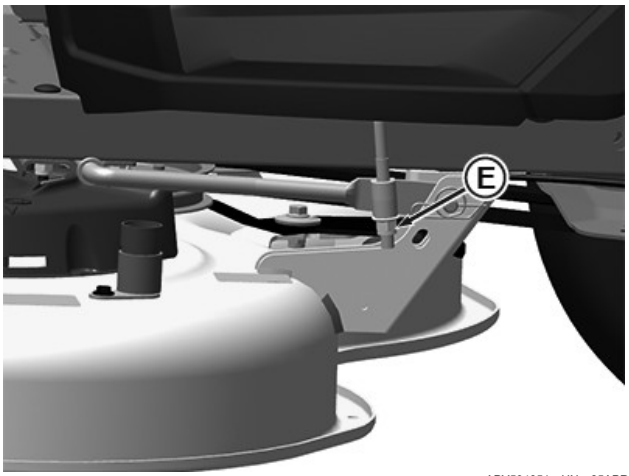

APY534851—UN—25APR22

c. Adjust the mower level, if necessary, by turning nuts clockwise (E) to raise the side of the mower deck, or counterclockwise to lower the mower deck.

NOTE: Ensure that bottom of the lock nut is fully engaged on the threaded fitting to avoid hardware loosening during operation.

6. Measure mower level (front-to-rear).

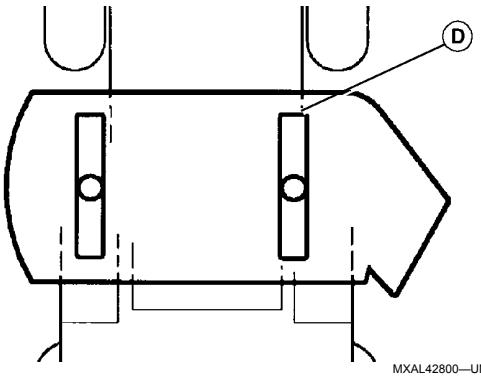

MXAL42800—UN—09APR13

a. Turn right blade (D) so that a blade tip points straight forward.
b. Measure from the blade tip to the surface. Take measurement for both blades. The front blade tips must be lower than the rear blade tips according to the specification listed.

Specification

Front-to-Rear Blade Tip Variation—Height. . . . . 3—6 mm (1/8—1/4 in)

c. **42A Mower Deck**

APY536724—UN—05MAY22

Adjust the mower front-to-rear level by loosening rear nut (G) on the front lift rod. Turn front nut (H) clockwise to raise front of mower or counterclockwise to lower it. Tighten rear nut (G) after adjustment is complete.

d. **48A and 54A Mower Decks**

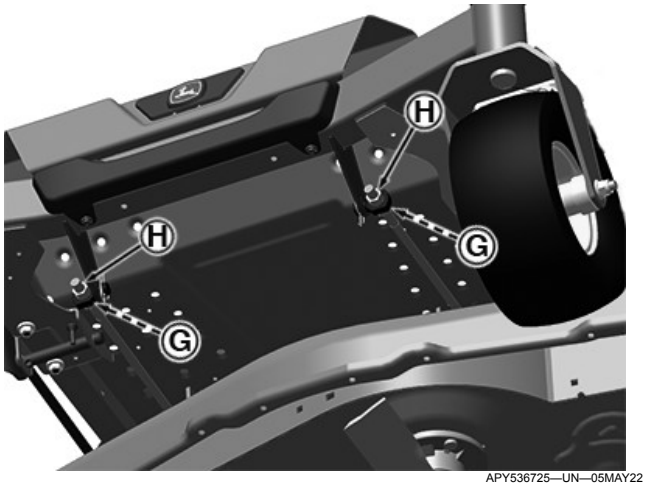

APY536725—UN—05MAY22

Adjust the mower front-to-rear level by loosening rear nuts (G) on front lift rods. Turn front nuts (H) clockwise to raise front of mower or counterclockwise to lower it. If the lift rod is not tight against both deck hooks, tighten loose side until both sides are tight against deck hooks. Shake the deck slightly to ensure that it has settled into position. Tighten rear nuts (G) after adjustment is complete.

GH8XT3T,00008D2-19-06JUN22

Adjusting Mower Wheels

CAUTION: Avoid injury! Rotating blades are dangerous. Before adjusting or servicing mower:

- **Disconnect spark plug wires or battery negative (-) cable to prevent engine from starting accidentally.**
- **Always wear gloves when handling mower blades or working near blades.**

IMPORTANT: Avoid damage! The mower deck can be damaged if mower wheels are incorrectly adjusted:

- **Wheels must not ride on ground supporting mower weight.**
- **Check wheel adjustment each time cutting height is changed.**

1. Park machine safely on a level surface. (See Parking Safely in the Safety section.)
2. Inflate tires to correct pressure.
3. Move the motion control lever outward to lock machine in start/shutdown position.
4. Adjust mower wheels to the correct height:

42A, 48A, and 54A Mower Decks

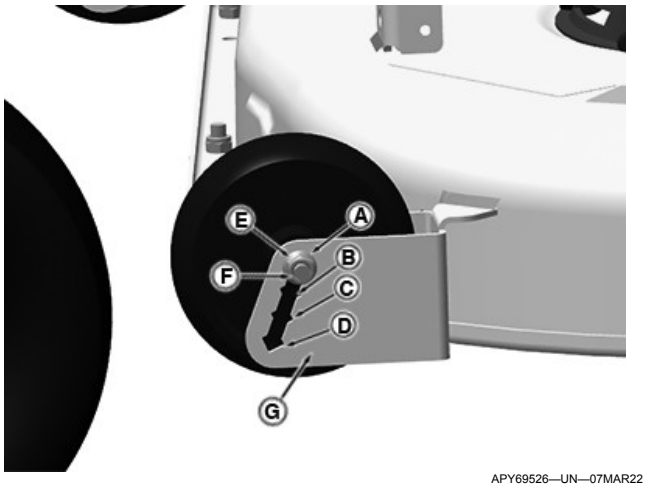

APY69526—UN—07MAR22

Position 1 (A)	31- 38 mm (1.25 — 1-1/2 in) Height of Cut
Position 2 (B)	38 - 50 mm (1-1/2 — 2 in) Height of Cut
Position 3 (C)	50 - 76 mm (2 — 3 in) Height of Cut
Position 4 (D)	76 - 101 mm (3 — 4.5 in) Height of Cut

- Remove nut (E). Pull carriage bolt (F) out until end of bolt clears the outer wall of the gauge wheel bracket (G), then slide bolt and wheel assembly to the desired position. Push bolt back through outer wall of bracket. Install nut (E) and tighten to specification.

Specification

Mower Wheel Nut—Torque. . . . . 24 N·m (18 lb·ft)

GH8XT3T,00008D3-19-06JUN22

Testing Safety Systems

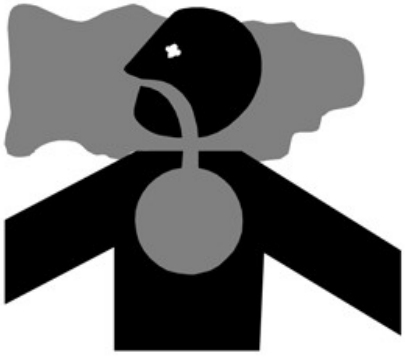

MXAL42804—UN—09APR13

CAUTION: Avoid injury! Engine exhaust fumes contain carbon monoxide and can cause serious illness or death.

Do not run an engine in an enclosed area, such as a garage, even with doors or windows opened.

Move the machine to an outside area before running the engine.

The safety systems installed on your machine should be checked before each machine use. Be sure that you have read the machine operator manual and are familiar with the operation of the machine before performing these safety system checks.

Use the following checkout procedures to check for normal operation of machine.

If there is a malfunction during one of these procedures, do not operate machine. **See your authorized dealer for service.**

Perform these tests in a clear open area. Keep bystanders away.

MP47322,00F4637-19-07JUN22

Testing Park Brake Switch

1. Park machine safely. (See Parking Safely in the Safety section.)
2. Sit on seat.
3. First test:
   a. Move right motion control lever inward to the neutral position.
   b. Turn key to the START position.
   Result: Engine must not turn over. If engine turns over, there is a problem with your safety interlock circuit.
4. Return right motion control lever to fully outward position.
5. Second Test:
   a. Move left motion control lever inward to the neutral position.
   b. Turn key to the START position.
   Result: Engine must not turn over. If engine turns over, there is a problem with your safety interlock circuit.
6. Return left motion control lever to fully outward position.

GH8XT3T,00009BA-19-13JUN22

Testing Park Brake

1. Park machine safely (See Parking Safely in the Safety section.)
2. Lock the park brake by moving the motion control levers fully outward.
3. Engage bypass valve control.
4. Try to push machine manually.

Result: Park brake must prevent machine from moving. If machine moves, see your authorized dealer for service.

NOTE: When testing is complete, disengage bypass valve control prior to returning machine to service.

GH8XT3T,00009BB-19-10JUN22

Testing Mower Engagement (PTO) Switch

1. Park machine safely. (See Parking Safely in the Safety section.)
2. Sit on seat.
3. Lock the park brake by moving motion control levers fully outward.
4. Pull mower engagement (PTO) switch up to engage.
5. Turn key switch to the START position.

Result: Engine must not turn over. If engine turns over, there is a problem with your safety interlock circuit.

H9PQBYK,0000043-19-10JUN22

Testing Seat Switch

1. Park machine safely. (See Parking Safely in the Safety section.)
2. First test:
   a. Lock the park brake by moving the motion control levers fully outward.
   b. Sit on seat.
   c. Start engine.
   d. Move motion control levers inward to neutral position.
   e. Pull mower engagement switch (PTO) up to engage.
   f. Raise up slightly off the seat. Do not get off machine.
   Result: The machine should stop. If engine does not stop, there is a problem with your safety interlock circuit.
   g. Return to sitting position in seat.
   h. Return motion control levers to the fully outward position.
   i. Push mower engagement switch (PTO) down to disengage.
   j. Turn machine off.
3. Second test:
   a. Lock the park brake by moving the motion control levers fully outward.
   b. Sit on seat.
   c. Start engine.
   d. Raise up slightly off the seat. Do not get off machine.
   Result: Engine should continue to run. If engine stops, there is a problem with your safety interlock circuit.
   e. Return to sitting position in seat.
   f. Turn machine off.

H9PQBYK,0000045-19-13JUN22

Using Park Brake

CAUTION: Avoid injury! Children or bystanders may attempt to move or operate an unattended machine. Always lock the park brake and remove the key before leaving the machine unattended.

Locking Park Brake

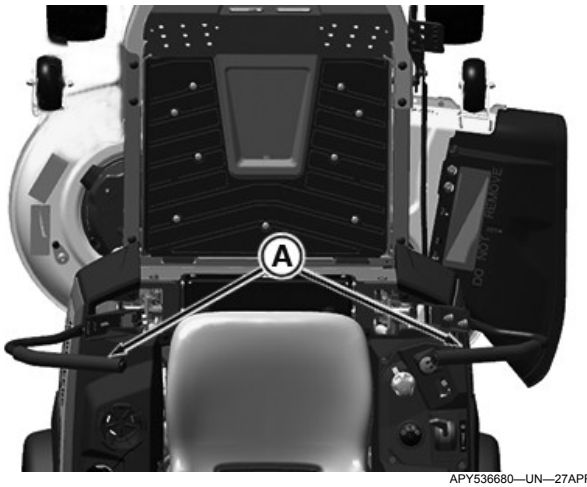

APY536680—UN—27APR22

To lock the park brake, move motion control levers (A) fully outward.

Unlocking Park Brake

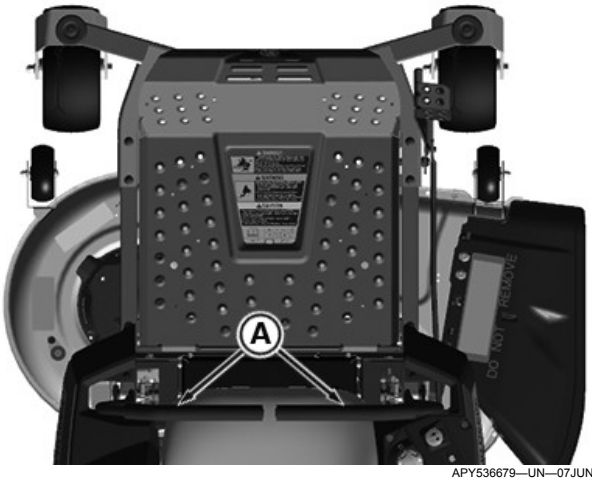

APY536679—UN—07JUN22

To unlock the park brake, move motion control levers (A) inward to neutral position.

GH8XT3T,00008B4-19-10JUN22

Using Key Switch

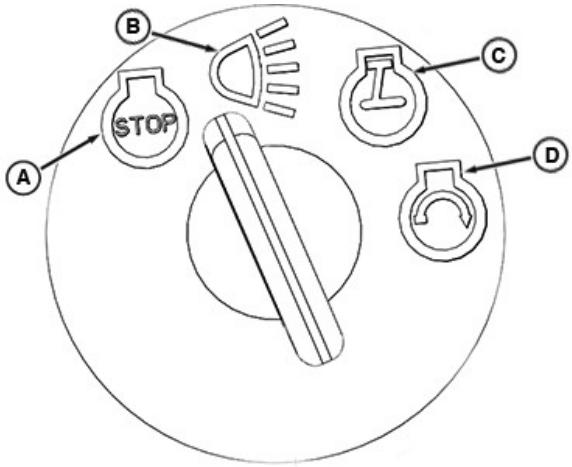

APY69525—UN—07MAR22

A—STOP Position
B—LED Light (if equipped)
C—Run Position
D—START Position

A - STOP (off) position - With key in the STOP position, all switched power is off, and engine should not run.

B - LED light - Turn key from STOP to this position. LED light will be on.

C - Run (on) position - Turn key from STOP to this position, and all switched power circuits will be on.

D - START position - Turn key to start position to crank the engine. Release key after engine has started and it will automatically return to the on position. The engine continues to run.

GH8XT3T,00008B5-19-09MAY22

Using Mower Engagement Switch

- To Engage Mower - Pull mower engagement knob up.
- To Disengage Mower - Push mower engagement knob down.

MP47322,00F463F-19-15MAR13

Using the Hour Meter

- The hour meter shows the number of hours the engine has run. The hour meter does not accumulate hours with the engine off when the key is in the run position. Use the hour meter to determine when your machine has reached the recommended service intervals.
- Turn the key to STOP position when not using the machine.
- Hour meter cannot be reset.

MP47322,00F4640-19-05JUN15

Using the Motion Control Levers

CAUTION: Avoid injury! Learn the use of the motion control levers and practice at half throttle until becoming proficient and comfortable with the operation of the machine.

Do not move motion control levers from forward to reverse or reverse to forward position rapidly. Sudden direction changes could cause loss of control or damage the machine.

Before using the machine, become familiar with the motion control levers and how they respond. It is essential to know how the machine accelerates, steers, and stops.

The functions of the motion control levers are:

- Dual function neutral position.
- Steering.
- Acceleration.
- Braking.

Start/Shutdown Position

APY536680—UN—27APR22

- Motion control levers must be placed fully outward (A). This position engages the park brake and allows the operator to start the engine.
- Forward and reverse movement of the motion control levers is prevented when levers are moved to the start/shutdown position.
- Operator can exit mower with the engine running when the mower engagement switch is disengaged and the motion control levers are fully outward.
- Motion control levers must be fully outward to safely enter and exit the operator's seat.

Neutral Position

GX536019—UN—25APR22

- Machine speed, motion, and direction can be controlled when the engine is running and motion control levers are in the neutral position (C).
- To stop the machine for an emergency, move the motion control levers quickly back to the neutral position.

Forward and Reverse Travel

Straight forward and reverse travel takes practice. If the machine does not track in a straight line when going forward or reverse, the motion control lever tracking may need adjusting.

1. Move throttle lever to the mow position.
2. Move both motion control levers from the start/shutdown position inward to the neutral position.
3. Move the motion control levers forward to begin forward travel.
4. Move the motion control levers rearward to begin reverse travel.
5. To stop travel, move motion control levers back to the neutral position.

Forward Travel

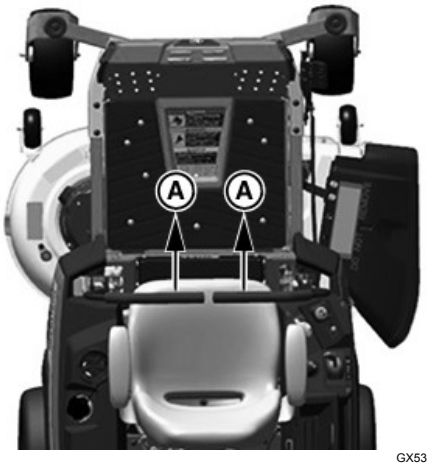

GX536021—UN—25APR22

Gradually move both motion control levers evenly forward (A) from neutral. To speed up, move the levers farther forward. To slow down smoothly, slowly move the levers toward neutral.

Reverse Travel

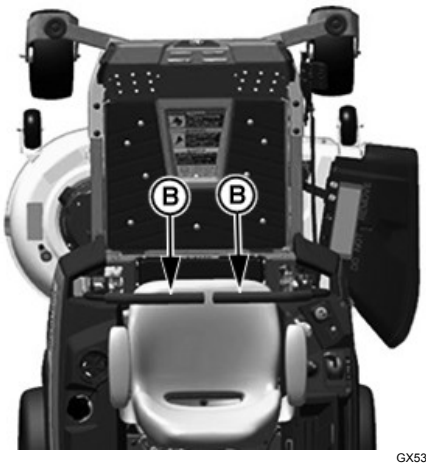

GX536020—UN—25APR22

Look down and behind, then gradually move both motion control levers evenly rearward (B) from neutral. To speed up, move the levers farther rearward. To slow down smoothly, slowly move the levers toward neutral.

Left Turn

GX536022—UN—25APR22

1. To turn slightly to the left, push right control lever (C) further forward than the left control lever (D).

APY69540—UN—28APR22

2. To turn sharply to the left, push right control lever (C) forward and pull left control lever (D) rearward at the same time.

Right Turn

GX536023—UN—25APR22

1. To turn slightly to the right, push left control lever (D) further forward than the right control lever (C).

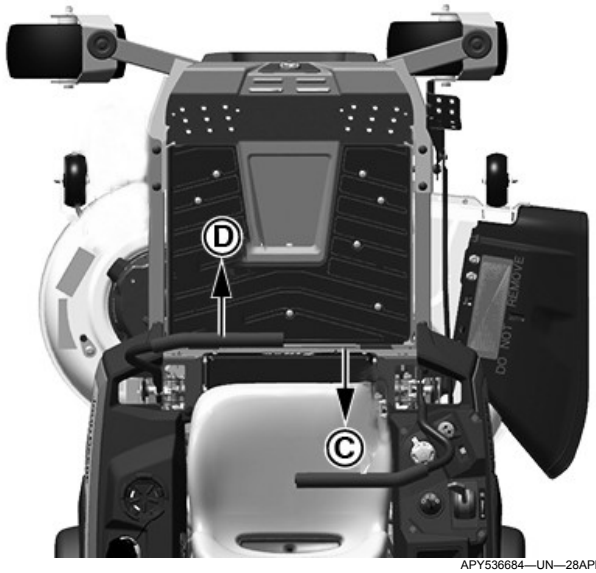

APY536684—UN—28APR22

2. To turn sharply to the right, push left control lever (D) forward and pull right control lever (C) rearward at the same time.

GH8XT3T,00009BC-19-10JUN22

Using Dual Levers (If Equipped)

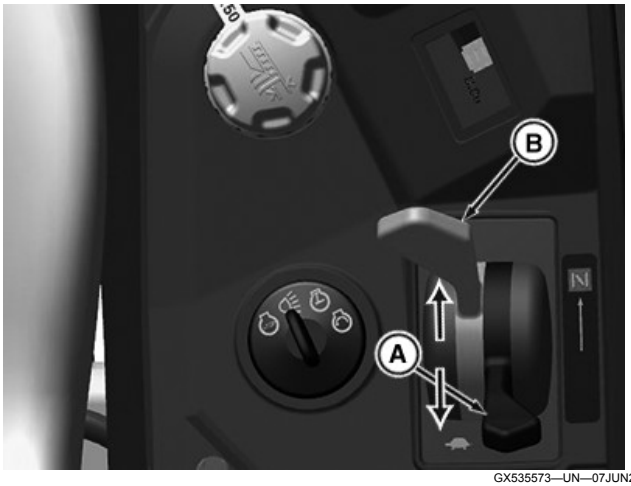

GX535573—UN—07JUN22

Dual lever for Model Z320R, Z320M

1. Pull the choke lever (A) down when starting a cold engine.
2. After engine has started, push the choke lever (A) up completely to the previous position.
3. Push the throttle lever (B) down to increase the engine speed.
4. Pull the throttle lever (B) up towards tortoise as shown in graphics to decrease the engine speed.

GH8XT3T,00008D8-19-12JUN22

Starting the Engine

CAUTION: Avoid injury! Engine exhaust fumes contain carbon monoxide and can cause serious illness or death.

Do not run an engine in an enclosed area, such as a garage, even with doors or windows opened.

Move the machine to an outside area before running the engine.

1. Sit on the operator's seat.
2. Set both motion control levers to the start/shutdown position.
3. Push the mower engagement knob down to disengage the mower.
4. Adjust throttle lever to set engine speed:
   - **Cold Start:** Set throttle control to the Start position, full throttle Use the choke control as necessary (if equipped).
   - **Warm Start:** Set throttle control to the mow position, full throttle.

IMPORTANT: Avoid damage! Starter may be damaged if the starter is operated for more than 20 seconds at a time:

NOTE: Wait two minutes before trying again if engine does not start.

5. Turn key switch to the START position.
6. After engine starts, release key switch to the RUN position, disengage the choke control (if equipped), and move throttle to the mow position, full throttle.

IMPORTANT: Avoid damage! Unnecessary engine idling may cause engine damage. Excessive idling can cause engine overheating, carbon buildup, and poor performance.

7. Allow the engine to warm up for 20 seconds.

8. Set both motion control levers to the neutral position from the start/shutdown position.

GH8XT3T,00008B1-19-09MAY22

Engaging Mower

CAUTION: Avoid injury! Clear mowing area of all bystanders when operating this machine. Thrown objects could cause serious injury or death.

Keep hands and feet away from blades and discharge opening.

Do not mow in reverse unless necessary.

1. Adjust mower to desired cutting height.
2. Start engine.
3. Move both motion control levers to the neutral position from the start/shutdown position.
4. Set throttle lever to the START/MOW position, full throttle.
5. Pull mower engagement switch up to engage mower.

NOTE: The travel speed and turn rate vary with the amount that the control levers are moved.

6. Push motion control levers forward slowly. Mow at safe travel speed.

GH8XT3T,00008B2-19-18MAR22

Using MulchControl (If Equipped)

CAUTION: Avoid injury! Rotating belts and blades are dangerous.

1. Park machine on a flat, level surface.
2. Disengage mower blades.
3. Lock the park brake.
4. Wait for all moving mower deck parts to stop before you leave the operators station.

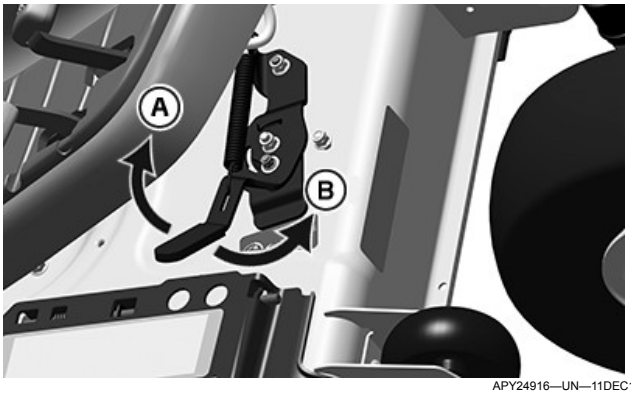

APY24916—UN—11DEC19

5. Rotate lever clockwise (A) to close or counterclockwise (B) to open.

SB31882,0000443-19-09JUN22

Unplugging Mower

CAUTION: Avoid injury! Do not attempt to unplug attachment with machine running.

Rotating blades are dangerous. Shut off the engine and remove the key before getting off the seat to inspect the machine and attachment.

Thrown objects can cause serious injury. Make sure that all machine parts are stopped before raising hopper top or removing chutes.

1. Park machine safely. Wait for all moving parts to stop before you leave the operator's station to inspect machine.
2. Check under mower deck and discharge chute for debris.
3. Clear all debris before using mower.
4. If plugging occurs, switch to open mode to allow some grass to discharge.

OUO2004,0000AF8-19-29JAN21

Stopping the Engine

1. Stop machine on a level surface, not on a slope.
2. Push the mower engagement switch down to disengage mower.
3. Throttle position must remain in the full throttle position to avoid backfiring at shutdown.
4. Lock the park brake by moving the motion control levers fully outward.
5. Turn ignition key to STOP (off) position.

CAUTION: Avoid injury! Children or bystanders may attempt to move or operate an unattended machine.

Always lock the park brake and remove the key before leaving the machine unattended.

6. Remove key.

H9PQBYK,0000047-19-10JUN22

Moving Machine by Hand

CAUTION: Avoid injury! When the bypass valve is open, the machine will have unrestricted motion.

- **Do not open the bypass valve when the machine is stopped on an incline to prevent it from going downhill out of control.**

IMPORTANT: Avoid damage! Transmission damage may occur if the machine is towed or moved incorrectly:

- **Move machine by hand only.**
- **Do not use another vehicle to move machine.**
- **Do not tow machine.**

When moving the machine without starting the engine, always use the bypass valves:

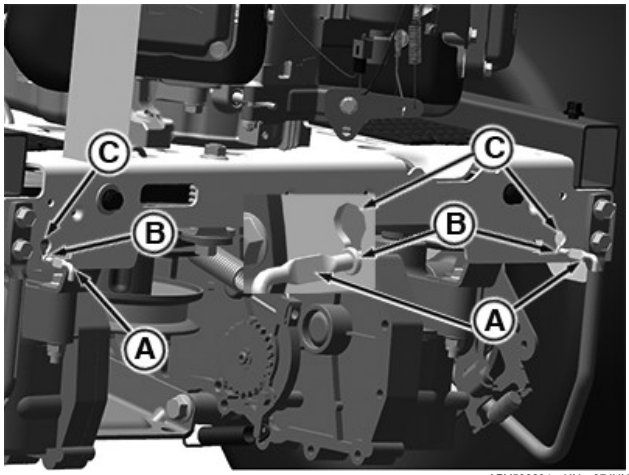

APY538834—UN—07JUN22

1. Pull bypass control rods (A) rearward through the key hole slot and place the collar (B) into the detent slot (C) to engage bypass valve.
2. Release park brake.
3. Push machine to desired location and lock park brake.

NOTE: The bypass control rods should be disengaged before starting and operating the machine.

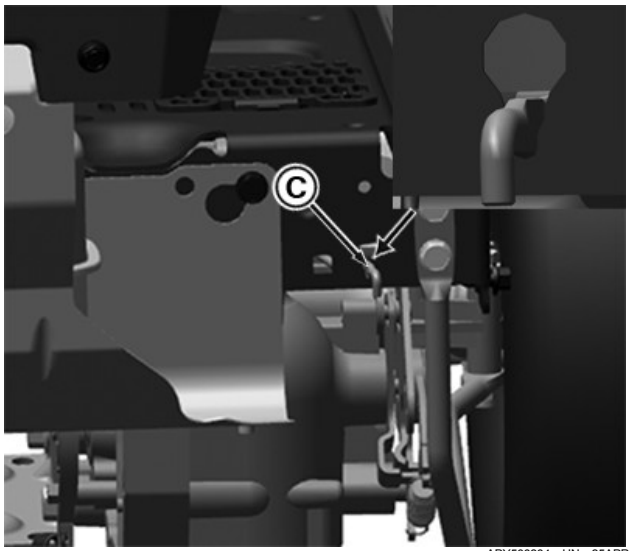

APY536234—UN—25APR22

4. Move both bypass control rods from their detent slot and push back the control rods to the original position (C).

GH8XT3T,00009BD-19-13JUN22

Unplugging Mower, Bagger, or Material Collection System

CAUTION: Avoid injury! Do not attempt to unplug attachment with the machine running.

- **Rotating blades are dangerous. Shut off the engine and remove the key before getting off the seat to inspect the machine and attachment.**
- **Thrown objects can cause serious injury. Make sure that all machine parts are stopped before raising hopper top or removing chutes.**

Checking for Plugging While Driving

If grass builds up in the front of the mower discharge chute, check for plugged chute or problems with blower assembly (if equipped).

If there is a trail of clippings behind mower or clippings blow to the side, check for plugged chute, full collector bags, or problems with blower assembly.

Removing Debris from Inspection Points:

CAUTION: Avoid injury! Do not use hands or feet to clear plugged mower deck or blower assembly. Stored energy can cause blades to rotate.

1. Park machine safely. Wait for all moving parts to stop before getting off to inspect machine.
2. Open hopper cover. Check chute outlet.
3. Remove chute from the mower deck or blower assembly. Check chute inlet.
4. Check under the mower deck for debris.

MP47322,00F4646-19-10JUL20

Using Wash Port to Clean Mower Deck

NOTE: Follow this procedure after each use to prevent buildup and remove corrosive lawn chemicals.

1. Park machine safely. (See Parking Safely in the Safety section).

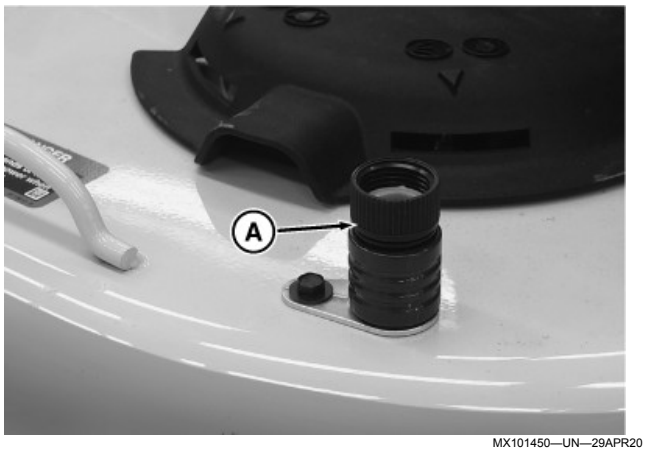

MX101450—UN—29APR20

2. Attach quick-coupler to the garden hose.
3. Attach garden hose with the quick-coupler to wash port (A) on the mower deck.
4. Turn on water.
5. Start engine.
6. Run at full throttle.
7. Engage mower blades.
8. Flush water under the deck for approximately one minute.
9. Disengage mower blades.
10. Stop engine.
11. Turn off water and remove garden hose and quick-coupler from the wash port.

SB31882,000040A-19-06MAY20

Transporting Machine on Trailer

NOTE: Trailer capacity must exceed combined machine weight and attachment weight. (See Specifications section in operator's manual.)

Be sure that trailer has all the necessary lights and signs required by law.

CAUTION: Avoid injury! Use extra care when loading or unloading the machine onto a trailer or truck. Machine wheels can go off the ramp or trailer, causing the machine to tip over.

- **To load, back slowly and in a straight line. Keep wheels away from drop-offs and edges.**
- **Do not use two separate loading ramps. Use full width loading ramp at least 30 cm (12 in) wider than machine to keep caster wheels from going off the ramp edge.**
- **Use a trailer with sides.**

1. Park trailer on level surface.
2. Fully raise mower deck before driving machine onto trailer.

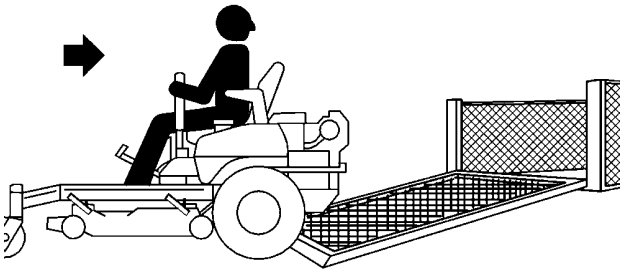

MXAL42817—UN—09APR13

3. Back machine onto heavy-duty trailer with full-width ramp.
4. Lower mower deck completely.
5. Lock park brake.
6. Turn off machine and remove key.
7. Flip seat forward.

APY536235—UN—25APR22

8. Fasten front of machine at both sides of the frame at points (A) to trailer with heavy-duty straps, chains, or cables. Straps must be directed down, forward, and outward from machine.

APY69528—UN—07MAR22

9. Fasten rear of machine at both sides of frame at points (B) to trailer with heavy-duty straps, chains, or cables. Straps must be directed down, rearward, and outward from machine.

GH8XT3T,00009BE-19-26APR22

Transporting Material Collection System (If Equipped)

If the material collection system is left on the machine during transport, follow these guidelines when trailering the unit:

- Empty the cloth bags and remove them from the hopper. Full bags add extra weight which can overstress the hopper frame on rough roads. At road travel speeds, wind can cause premature wear of the cloth bags.
- Make sure that the hopper cover is latched securely to the hopper frame.
- If the unit is transported over long distances or at high speeds, remove the rear bagger or power flow chute before transport.

TH84124,000020A-19-10APR19

Towing Loads

IMPORTANT: Avoid damage! Towing excessive trailer loads can stress drivetrain components. To avoid damage to drivetrain components, use the following guidelines.

- Do not exceed maximum towing capacity of 113.4 kg (250 lbs).
- Do not exceed maximum tongue weight of 45.4 kg (100 lbs).
- Always run tractor at full throttle when towing loads.
- Avoid inclines greater than a 10 degree slope while towing to avoid damage to the pulling machine. Use the Slope Guide located in this operator's manual to ensure proper machine towing operation. See Operating on Slopes in the Safety section for additional information.
- Avoid making tight turns. Make wide turns to avoid jack-knifing.
- Travel slowly and allow extra stopping distance.

SB31882,0000444-19-01JUN20

Mowing Tips

- Mow grass with throttle lever in the full fast / mow position.
- Mow grass when it is dry.
- Keep mower deck and discharge chute clean.
- Mow with sharp blades.
- Properly level mower deck for a smooth cut.
- Mow grass frequently.
- Use a travel speed that fits the conditions:
  - Mow tall or wet grass twice. With the first pass, cut grass

halfway to desired height. With the second pass, cut to the desired height.
- Travel slowly when mowing tall or thick grass.
- Avoid damaging grass by slipping or skidding machine drive wheels. Practice smooth control lever movements.
- When performing sharp turns, do not allow inside machine drive wheel to stop and twist on grass.

MG39705,00005BB-19-09JUN21

Blade Choices

Several types of blades are available for Z300 series mowers:

42A , 48A, and 54A Decks

- Dedicated Side discharge blades. These blades are designed for optimal performance when side discharging, and are installed on Z300 Series 42A, 48A, and 54A mowers when shipped from the factory.
- Dedicated Mulching blades. These blades are designed for optimal performance when used with a mulch cover or mulch plug installed.
- Dedicated Bagging blades (42A Deck Only). These blades are designed for optimal performance when used with a Z300 series bagger.

MX52301,0000EFF-19-28MAY20

Service Intervals

Servicing Your Machine

IMPORTANT: Avoid damage!

Operating in extreme conditions may require more frequent service intervals:

- **Engine components may become dirty or plugged when operating in extreme heat, dust or other severe conditions.**
- **Engine oil can degrade if machine is operated constantly at slow or low engine speeds or for frequent short periods of time.**

High-pressure washing can cause damage to machine components. It is recommended that your vehicle be washed by hand or with a garden hose using mild soap.

Avoid spraying water with any great force near or into the following places:

- **Air intake**
- **Electrical connections (including battery compartment)**
- **Wheel bearings**
- **Radiator (if equipped)**
- **Warning labels**
- **Other labels**
- **Ignition switch**
- **Instrument panel (gauges and switches)**
- **Breather/tube vents**
- **Mower spindles**
- **Mower idler bearings**
- **Transmission cooling fans**

Please use the following timetables to perform routine maintenance on your machine.

Park the vehicle safely. (See Park Safely in the SAFETY Section.)

OUMX068,00006EF-19-22NOV16

Service Intervals

Every 8 Hours or Daily

- Check Engine Oil.
- Clean muffler area, air intake screens, and mower deck.
- Check brake system.
- Check fuel level.
- Clean mower deck with washout port after use.
- Check under machine for leaks.
- Check safety interlock system.
- Check tire pressure.

Yearly or 50 Hours (Whichever Comes First)

- Check mower deck level. Level if necessary.
- Change engine oil. (10W30)
- Replace engine oil filter.
- Lubricate mower deck spindles and idler arm.

Every 100 Hours or Annually (Whichever Comes First)

- Replace air filter, fuel filter, and spark plugs.
- Clean engine cooling fins.
- Check mower belt. Replace if necessary.
- Sharpen / replace mower blades.
- Clean underside of mower deck.
- Check tire pressure.
- If there is debris that cannot be blown out, remove blower housing for complete cleaning.

Every 200 Hours

- Check / adjust engine valve clearance. See your John Deere dealer for this service.

gh8xt3t,1654593830569-19-07JUN22

Service Lubrication

Grease

IMPORTANT: Avoid damage! Use recommended John Deere greases to avoid component failure and premature wear.

The following grease is recommended for service:

- John Deere Multi-Purpose HD Lithium Complex Grease
- Grease-Gard™ Premium Plus

Not all grease types are compatible; John Deere does not recommend mixing greases. If using any product other than the recommended grease in service, purge any remaining grease from the system before application. If not practical, grease twice as often until all old grease is purged from the system.

OUMX068,0000642-19-20APR21

Lubricating Mower Deck Spindles

NOTE: Removal of belt shields is not necessary to lubricate the spindles.

1. Park machine safely. (See Parking Safely in the Safety section.)
2. Lower mower deck fully.
3. Remove the mower deck foot plate. (See removing and installing mower deck foot plate in the Service Mower section.)

42A Mower Deck

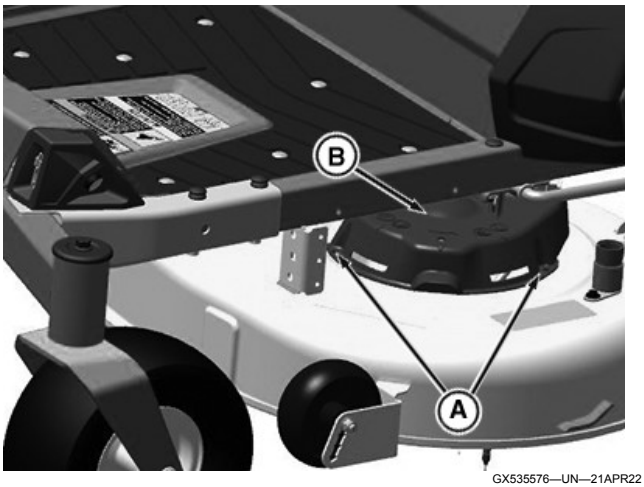

GX535576—UN—21APR22

- Remove two screws (A) and left spindle cover (B).

GX535581—UN—21APR22

- Lubricate left spindle grease fitting (C) with two pumps of grease at the specified interval.
- Install the left spindle cover with two screws.
- Repeat steps to lubricate the right mower deck spindle.

48A and 54A Mower Decks

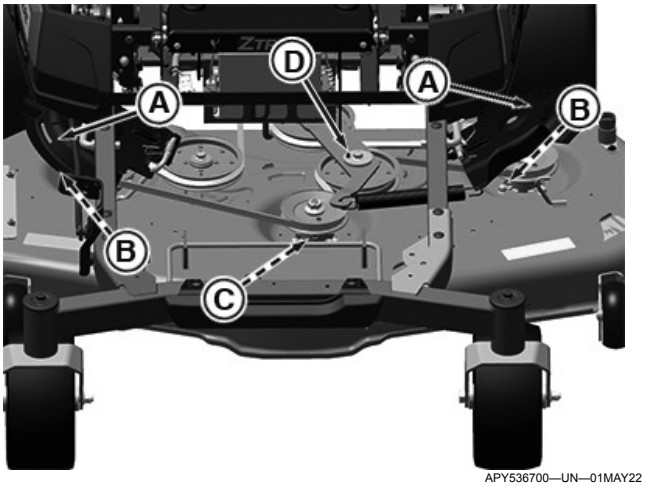

APY536700—UN—01MAY22

- Raise spindle covers (A) and lubricate spindle grease fittings (B).
- Lubricate center spindle grease fitting (C) from front of mower deck.
- Lubricate idler arm grease fitting (D).

GH8XT3T,00008DF-19-13JUN22

Service Engine

Emissions Service Information

A qualified repair shop or person of the owner's choosing may maintain, replace, or repair emission control devices and systems with original or equivalent replacement parts. However, warranty, recall and all other services paid for by John Deere must be performed at an authorized John Deere service center.

Within the warranty period, John Deere will reimburse reasonable service costs incurred at service providers outside the John Deere authorized network only in an unsafe, emergency condition if an authorized John Deere dealer is not available and the failure does not arise from the owner's misuse or failure to perform required maintenance. An emergency situation exists under this section if, after 30 days, the authorized John Deere network is unable to perform the repairs or source replacement parts.

Emission Control System Certification Label

NOTE: Tampering with emission controls and components by unauthorized personnel may result in severe fines or penalties. Emission controls and components can only be adjusted by EPA and/or CARB authorized service centers. Contact your John Deere Retailer concerning emission controls and component questions.

The presence of an emissions label signifies that the engine has been certified with the United States Environmental Protection Agency (EPA) and/or California Air Resources Board (CARB).

The emissions warranty applies only to those engines marketed by John Deere that have been certified by the EPA and/or CARB; and used in the United States and Canada in off-road mobile equipment.

Altitude Adjustment (Gasoline or Propane Converted Engines Only)

If your engine features a carburetor it is calibrated by the engine manufacturer and is not adjustable.

If your engine is operated at altitudes below 610 m (2,000 ft.), a high altitude carburetor jet kit is not required. If your engine is operated at altitudes above 610 m (2,000 ft.), a high altitude carburetor jet kit may be required for proper engine performance and emissions control. Operating the engine with the wrong carburetor configuration at a given altitude may increase the engine's emissions and decrease fuel efficiency and performance.

See a qualified service provider for details on jet kit requirements for your specific product.

TC00531,00000EC-19-28MAR16

Avoid Fumes

CAUTION: Avoid injury! Engine exhaust fumes contain carbon monoxide and can cause serious illness or death.

Do not run an engine in an enclosed area, such as a garage, even with doors or windows opened.

Move the machine to an outside area before running the engine.

MP47322,00F4652-19-13JAN15

Gasoline Engine Oil

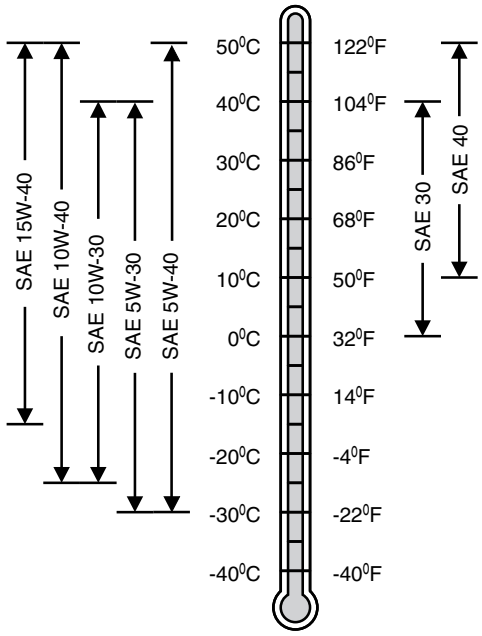

TS1744—UN—25AUG20

Oil Viscosities for Air Temperature Ranges

Use oil viscosity based on the expected air temperature range during the period between oil changes.

Using single viscosity grade oils such as SAE 30 or SAE 40 can reduce oil consumption in air cooled engines.

The following oils are approved:

- John Deere Plus-50™ II
- John Deere Turf-Gard™

Other oils may be used if they meet one or more of the following:

- ILSAC GF-6A
- API Service Category SP
- API Service Category SN
- API Service Category SM
- API Service Category SL
- API Service Category SJ
- ACEA Oil Sequence A3/B3
- ACEA Oil Sequence A3/B4
- ACEA Oil Sequence A5/B5
- ACEA Oil Sequence C5
- ACEA Oil Sequence C4
- ACEA Oil Sequence C3
- ACEA Oil Sequence C2
- ACEA Oil Sequence C1

DX,ENOIL2-19-15JUL20

Checking Engine Oil Level

IMPORTANT: Avoid damage! Failure to check the oil level regularly could lead to serious engine problems if oil level is out of the operating range:

- **Check oil level before operating.**
- **Check oil level when the engine is cold and not running.**
- **Keep oil level between the dipstick marks.**
- **Shut off engine before adding oil.**

NOTE: Check oil twice a day if you run engine over 4 hours in a day. Make sure that engine is cold when checking engine oil level.

1. Park machine safely. (See Parking Safely in the Safety section.)

IMPORTANT: Avoid damage! Dirt and contamination can enter engine when checking oil level. Clean area around dipstick before loosening or removing.

2. Clean area around the dipstick to prevent debris from falling into crankcase.

GX535578—UN—19APR22

3. Remove dipstick (A). Wipe with clean cloth.
4. Install and tighten the dipstick.
5. Remove dipstick.
6. Check oil level on dipstick. Oil must be between ADD and FULL marks.
7. If oil level is low, add oil to bring oil level no higher than FULL mark on dipstick. Do not overfill.
8. Install and tighten the dipstick.

H9PQBYK,0000059-19-21APR22

Changing Conventional Engine Oil and Filter

IMPORTANT: Avoid damage! Operating in extreme conditions may require more frequent service intervals:

- **Engine components may become dirty or plugged when operating in extreme heat, dust, or other severe conditions.**
- **Engine oil can degrade if machine is operated constantly at slow or low engine speeds or for frequent short periods of time.**

1. Run engine to warm oil.
2. Park machine safely on the level surface. (See Parking Safely in the Safety section.)

IMPORTANT: Avoid damage! Dirt and contamination can enter engine when checking oil level. Clean area around dipstick before loosening or removing.

Plus-50 is a trademark of Deere & Company
Turf-Gard is a trademark of Deere & Company

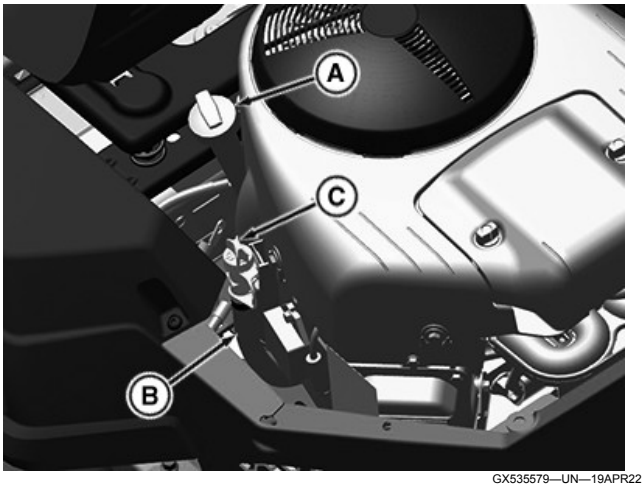

GX535579—UN—19APR22

3. Clean area around dipstick (A) to prevent debris from falling into crankcase.
4. Loosen dipstick (A). Disconnect oil drain hose (B) from the side of the engine.
5. Remove the oil drain cap (C). Carefully lower the quick oil drain into an approved container until the oil has drained completely.

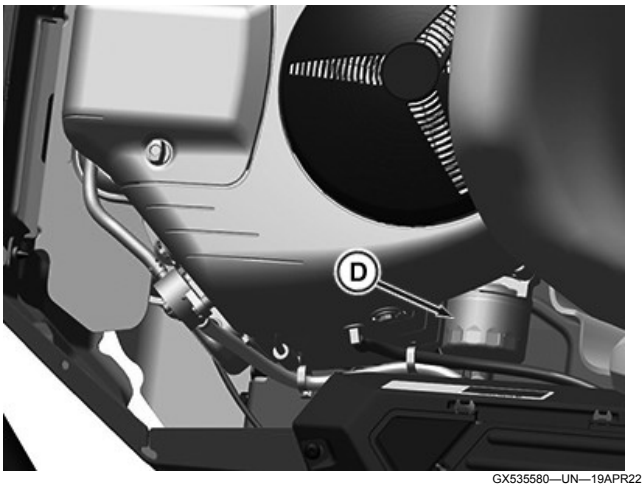

GX535580—UN—19APR22

6. Wipe dirt from around the oil filter (D). Place a drain pan under the oil filter, and remove filter.
7. Wipe up any dripped oil from the oil filter on the engine pan.
8. Put a light coat of fresh, clean oil on the new filter gasket.
9. Install replacement oil filter by turning oil filter to the right (clockwise) until the rubber gasket contacts filter base. Tighten filter an additional one-half turn.
10. After oil has drained, install the drain cap (C) and attach drain hose assembly (B) to side of engine.
11. Add oil no higher than FULL mark on dipstick. Begin with specification. Do not overfill.

Specification

Engine Oil—Capacity with filter. . . . . 1.9 L (2.0 qt) (approx.)

12. Tighten dipstick (A) .
13. Start and run engine at idle to check for leaks. Stop engine. Fix any leaks before operating.
14. Check oil level. Add oil if necessary.
15. Wipe up all surfaces of any oil drippings.

H9PQBYK,0000058-19-13JUN22

Cleaning Air Intake Screen and Engine Fins

CAUTION: Avoid injury! Compressed air can cause debris to fly a long distance.

- **Clear work area of bystanders.**
- **Wear eye protection when using compressed air for cleaning purposes.**
- **Reduce compressed air pressure to specification.**

Specification

Air—Pressure. . . . . 210 kPa (30 psi)

IMPORTANT: Avoid damage! An obstructed air intake screen can cause engine damage due to overheating. Keep air intake screen and other external surfaces of the engine, including cooling fins, clean at all times to allow adequate air intake.

1. Park machine safely. (See Parking Safely in the Safety Section.)
2. Clean air intake screen on top of engine and external surfaces with rag, brush, vacuum, or compressed air.

MP47322,00F4656-19-12JUN22

Cleaning Engine Shroud

CAUTION: Avoid injury! Compressed air can cause debris to fly a long distance.

- **Clear work area of bystanders.**
- **Wear eye protection when using compressed air for cleaning purposes.**
- **Reduce compressed air pressure to specification.**

Specification

Air—Pressure. . . . . 210 kPa (30 psi)

IMPORTANT: Avoid damage! An obstructed air intake screen can cause engine damage due to overheating. Keep Air intake screen and other external surfaces of engine, including cooling fins, clean at all times to allow adequate air intake.

CAUTION: Avoid injury! Touching hot surfaces can burn skin. The engine, components, and fluids will be hot if the engine has been running. Allow the engine to cool before servicing or working near the engine and components.

1. Park machine safely. (See Parking Safely in the Safety Section.)
2. Clean air intake screen and external engine surfaces (See Cleaning Air Intake Screen and Engine Fins in ENGINE Section).
3.

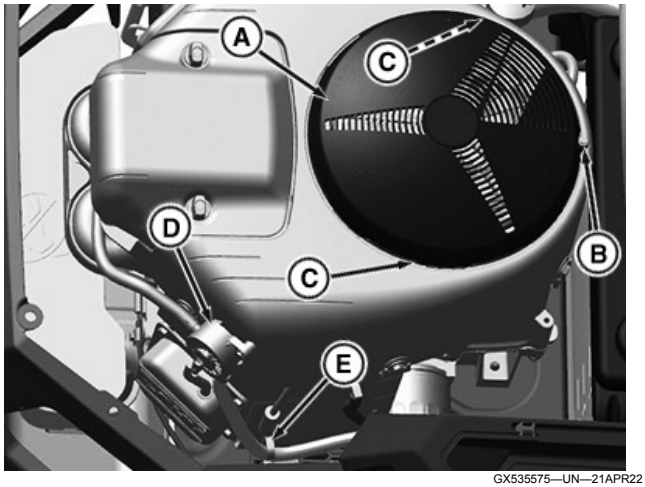

GX535575—UN—21APR22

Locate rotating screen guard (A) at the top of engine.

4. Remove screw (B) (if equipped) press in tabs (C) and lift off guard (A).
5. Clean guard and flywheel cover of debris.

IMPORTANT: Avoid damage! Be careful to maintain position of fuel pump assembly (D), clips (E) for the fuel line, and any other attached components when removing parts from the side of engine.

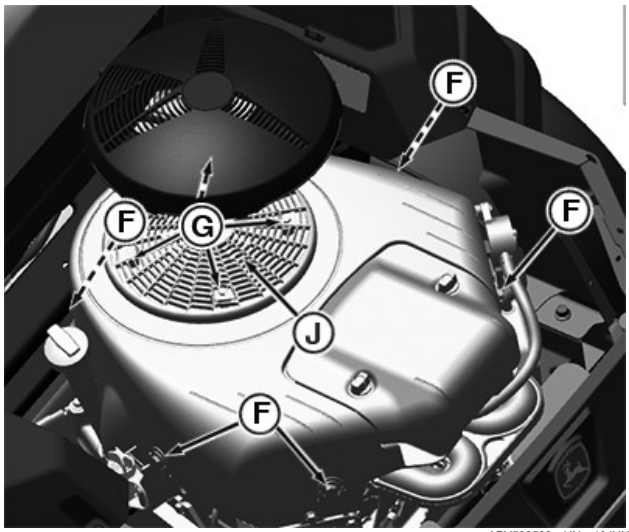

APY538562—UN—13JUN22

6. Remove five bolts (F) and engine shroud.
7. Remove four bolts (G) and rotating screen (J).

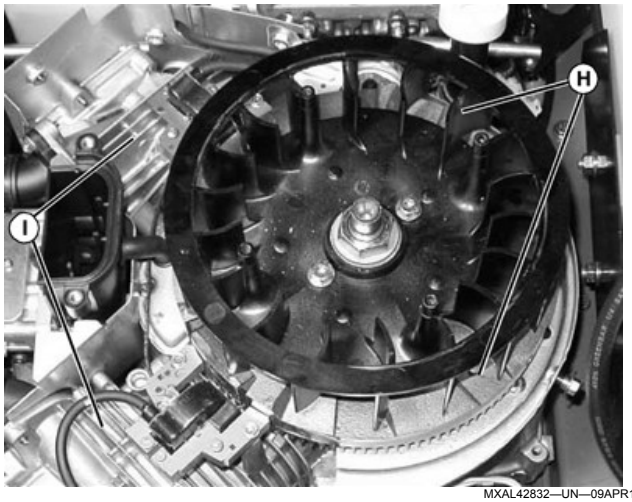

MXAL42832—UN—09APR13

8. Clean debris from:
   - Fan areas (H)
   - Cylinder head cooling fins (I)
   - Engine cooling fins
   - Area between engine and frame
9. Install rotating screen with four bolts.

IMPORTANT: Avoid damage! Engine shroud must be assembled so that the slots in the shroud align with the ridge in the air intake and mating surfaces along sides of engine. Failure to assemble correctly will prevent the air filter from sealing and may cause engine damage.

10. Install shroud with hardware.

H9PQBYK,0000057-19-13JUN22

Checking and Cleaning Air Cleaner Element

1. Park machine safely. (See Parking Safely in the Safety section.)
2. Let engine cool.

IMPORTANT: Avoid damage! To prevent engine damage, do not allow any foreign objects to fall into the carburetor air intake.

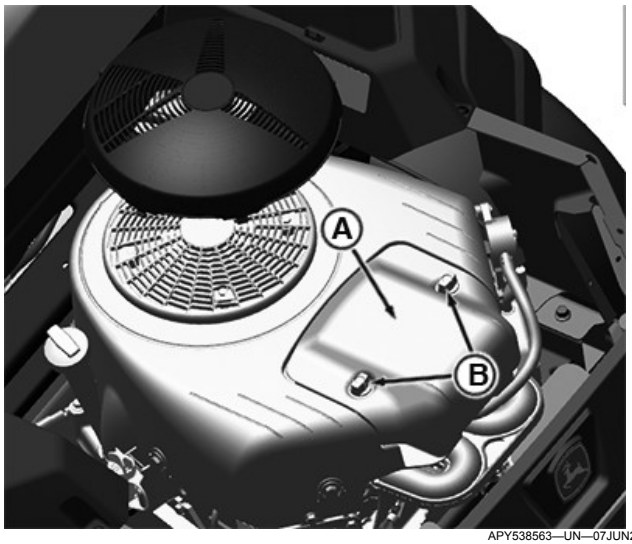

APY538563—UN—07JUN22

3. Clean dirt and debris from the air cleaner cover (A).
4. Loosen two knobs (B) and remove cover.

IMPORTANT: Avoid damage! Dirt and debris can enter the engine through a damaged filter element:

- **Do not wash paper element.**
- **Do not attempt to clean paper element by tapping against another object.**
- **Do not use pressurized air to clean element.**
- **Replace element only if it is dirty, damaged or the seal is cracked.**

NOTE: During filter cartridge removal, any material or foreign object that enters the air intake must be removed before replacement of the cartridge.

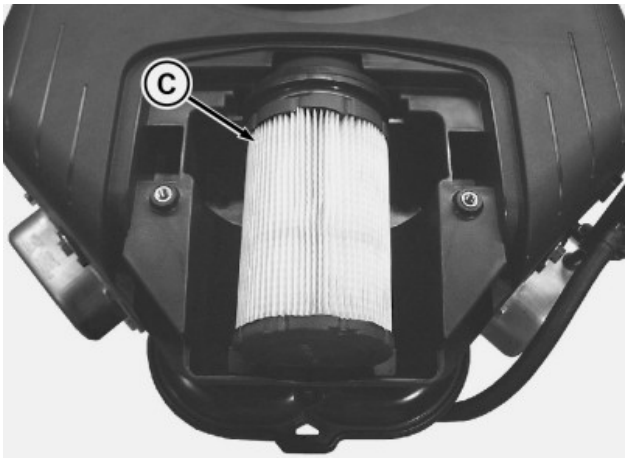

MXT010728—UN—21APR14

GXT002964—UN—18APR16

5. Lift out filter cartridge (C) and inspect it for damage.

NOTE: Do not put engine oil on precleaner. Engine oil may wick into the paper filter element and result in poor engine performance.

• Rinse precleaner thoroughly. Squeeze out excess water in a dry cloth until precleaner is dry.

• Replace the precleaner if damaged or missing.

6. If equipped, carefully clean and inspect foam precleaner (D).
   - Wash precleaner in a solution of warm water and liquid detergent.
7. Clean air cleaner housing carefully. Prevent any dirt from falling into carburetor.
8. Install cartridge. Make sure that cartridge and seal are properly seated and sealing the air intake area.
9. Install air cleaner cover and tighten knobs. Do not overtighten.

gh8xt3t,1654597995170-19-13JUN22

Checking and Cleaning Air Cleaner Element

1. Park machine safely. (See Parking Safely in Safety section.)
2. Let engine cool.

IMPORTANT: Avoid damage! To prevent engine damage, do not allow any foreign objects to fall into the carburetor air intake.

APY539461—UN—09JUN22

Engine for model Z320

3. Clean dirt and debris from the air cleaner cover and remove the cover (A).

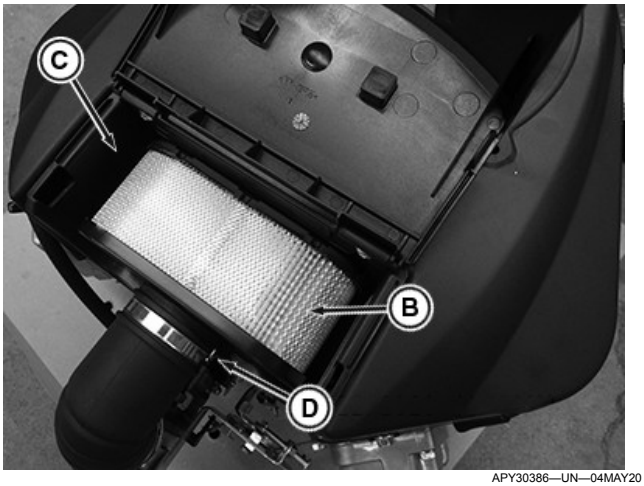

APY30386—UN—04MAY20

Engine for model Z320

4. Loosen air filter clamp by turning thumbscrews (D) counterclockwise until clamp loosens. Carefully lift the filter element (B) out of the blower housing (C)

IMPORTANT: Avoid damage! Dirt and debris can enter the engine through a damaged filter element

NOTE: During filter cartridge removal, any material or foreign object that enters the air intake must be removed before replacement of the cartridge.

APY30387—UN—04MAY20

Engine for model Z320

5. Remove the air filter (E) clean by tapping it gently on a flat surface to remove dust. If the element is very dirty, replace it with a new one.
6. Clean air cleaner base carefully, preventing any dirt from falling into the air intake tube.
7. Install cartridge. Make sure that cartridge and seal are properly seated and sealing the air intake area.
8. Install air cleaner cover.

gh8xt3t,1654623265569-19-13JUN22

Checking Spark Plug

CAUTION: Avoid injury! Touching hot surfaces can burn skin. The engine, components, and fluids are hot if the engine has been running. Allow the engine to cool before servicing or working near the engine and components.

1. Park machine safely (See Parking Safely in the Safety section).

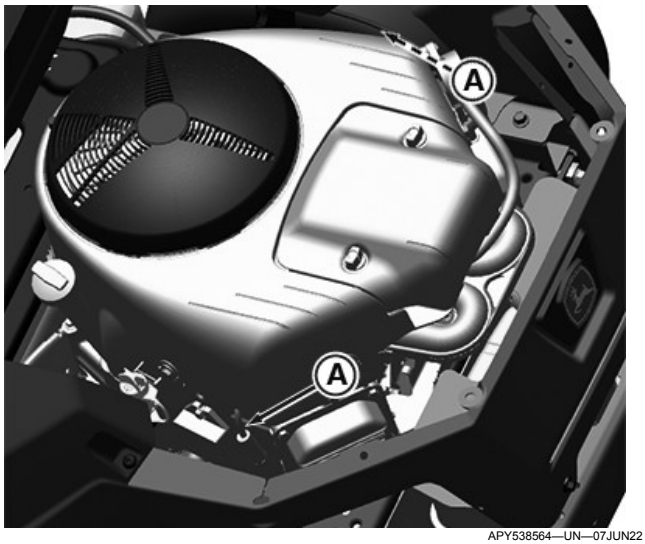

APY538564—UN—07JUN22

2. Disconnect spark plug wire (A) on each side of engine.
3. Remove each spark plug.
4. Clean spark plug carefully with a wire brush.
5. Inspect the spark plug for:
   - Cracked porcelain.
   - Pitted or damaged electrodes.
   - Other wear or damage.

NOTE: In Canada, replace the spark plug with a resistor plug only.

6. Replace the spark plugs as necessary.

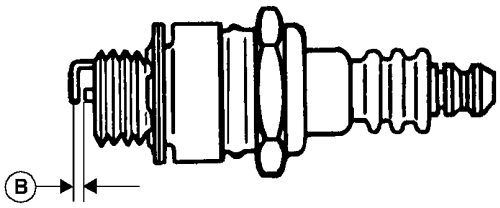

MXAL42836—UN—09APR13

7. Check plug gap (B) with a wire feeler gauge. To change gap, move the outer electrode. Gap must be to specification.

Specification

Electrode—Gap. . . . . 0.75 mm (0.030 in)

8. Install spark plugs and tighten to specification.

Specification

Spark Plug—Torque. . . . . 20 N·m (180 lb·in)

9. Connect the spark plug wires.

gh8xt3t,1654598082967-19-13JUN22

Replacing Fuel Filter

CAUTION: Avoid injury! Fuel vapors are explosive and flammable:

- **Do not smoke while handling fuel.**
- **Keep fuel away from flames or sparks.**
- **Shut off engine before servicing.**
- **Cool engine before servicing.**
- **Work in a well-ventilated area.**
- **Clean up spilled fuel immediately.**

NOTE: Change filter when fuel is low.

1. Park machine safely. (See Parking Safely in the Safety section).
2. Let engine cool.
3. Raise operator seat if necessary.
4. Put a drain pan under the fuel filter.

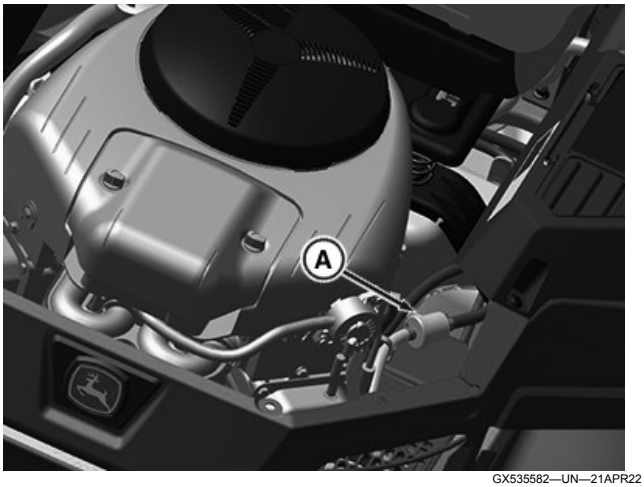

GX535582—UN—21APR22

Standard twin cylinder shown.

5. Slide hose clamps on both sides of the fuel filter (A) away from the fuel filter ends using pliers.
6. Disconnect hoses from the filter.

IMPORTANT: Avoid damage! Incorrect installation of the fuel filter may cause engine damage. Install the filter with the arrow pointing in the direction of fuel flow (towards the engine) for proper operation.

7. Connect hoses to the new filter making sure that the filter arrow is pointing in the direction of the fuel flow.
8. Install clamps and check for leaks.

H9PQBYK,0000056-19-21APR22

Cleaning Engine Screen Guard

The twin cylinder engine incorporates a removable guard over the rotating flywheel cover at the top of the engine. The guard should be removed to check for and remove any debris daily in conjunction with checking engine oil level.

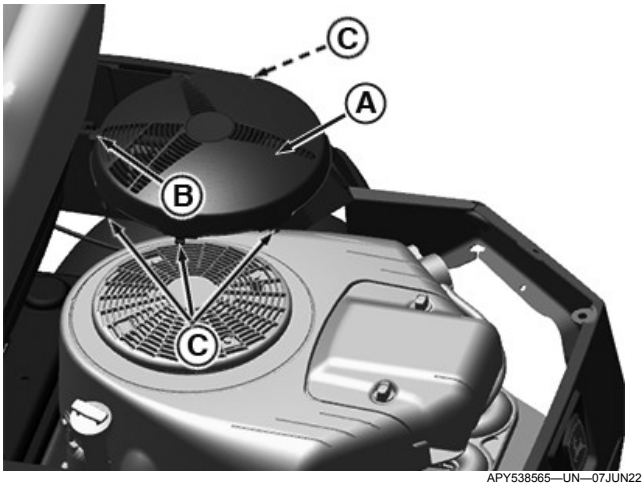

APY538565—UN—07JUN22

1. Locate rotating screen guard (A) at top of engine.
2. Remove screw (B) (if equipped), press in tabs (C) and lift off guard (A).
3. Clean guard and flywheel cover of debris.
4. Install guard after cleaning.

gh8xt3t,1654598171387-19-07JUN22

Spark Arrestor Maintenance (If Equipped)

Spark arrestor assemblies include a screen element that should be inspected and cleaned periodically. Visually inspect the screen for tears, broken wires, or loose welds. Replace the spark arrestor assembly if any of these conditions exist. If the screen is determined to be in good condition, proceed with cleaning the screen by brushing away loose dirt or carbon using a brush.

RM87422,00002DA-19-05JUL17

Cleaning Spark Arrestor

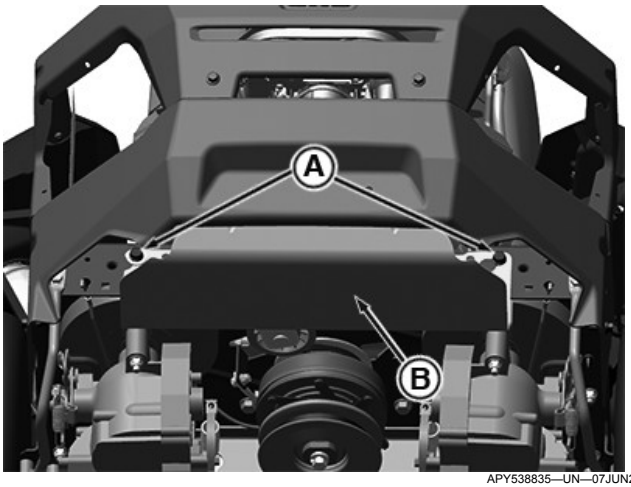

APY538835—UN—07JUN22

1. Loosen two bolts (A) and remove muffler shield (B).

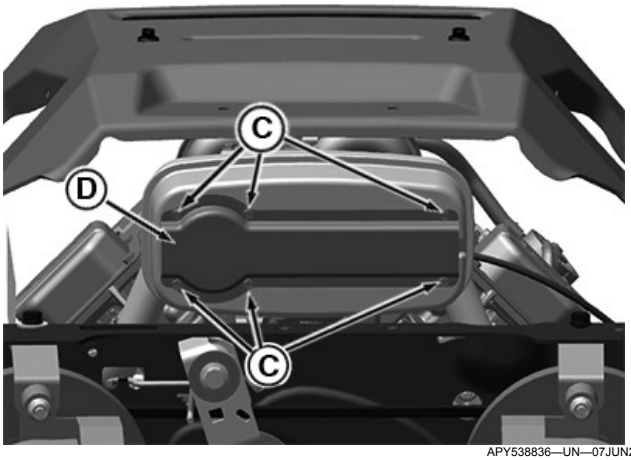

APY538836—UN—07JUN22

2. Remove screws (C), spark arrestor cover (D) and spark arrestor from engine.
3. Inspect, clean, or if necessary, replace the screen if damaged.
4. Install spark arrestor and cover on muffler and secure with original screws.
5. Install muffler shield and tighten hardware.

NOTE: If muffler sustains damage during the removal or installation process, replace muffler.

gh8xt3t,1654598266226-19-13JUN22

Service Transmission

Checking Transmission

The transmission is a sealed component. No maintenance is required on this transmission. If you suspect any transmission problems, please contact your authorized dealer.

TH84124,00001D2-19-12JUN15

Checking and Adjusting Neutral Creep

Checking Neutral Creep

Check neutral creep with engine running, motion control levers in the start/shutdown position, park brake off, and machine on level ground.

If the machine creeps forward or reverses while motion control levers are in the start/shutdown position, adjust the motion control lever linkages.

Adjusting Neutral Creep

1. Park machine safely. (See Parking Safely in the Safety section.)
2. Remove style panel for better access to adjustment components (if desired):

APY536681—UN—28APR22

a. Remove two bolts (A) to remove steering arm.

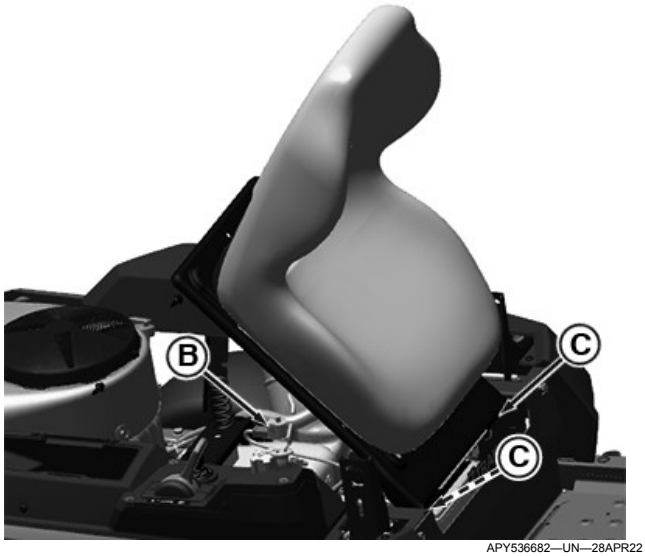

APY536682—UN—28APR22

b. Raise rear of seat and disconnect connector (B) from the seat switch wiring harness connector. And remove two bolts (C) to remove the seat.

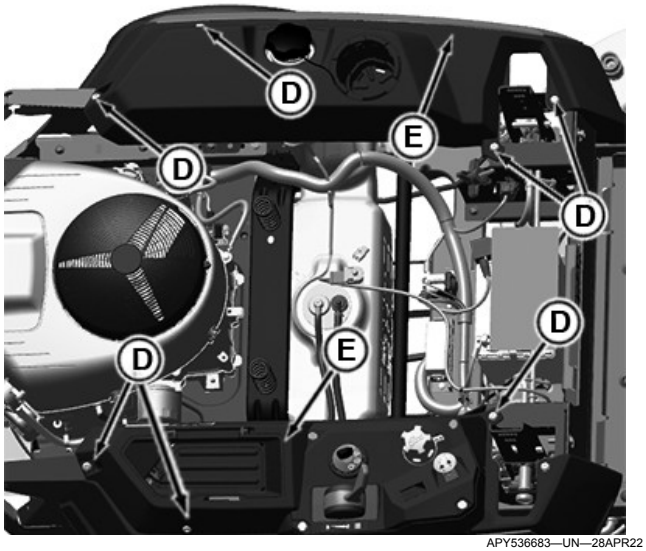

APY536683—UN—28APR22

c. Remove four push retainers (D) from left side and three push retainers (D) from right side of the style panel (E) and remove the style panel(E).

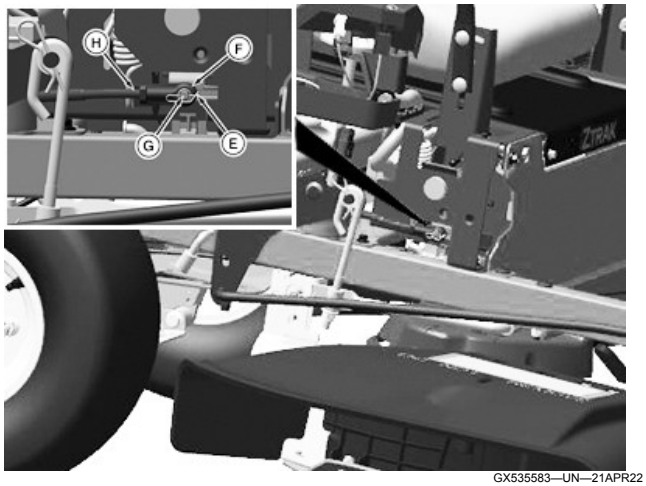

GX535583—UN—21APR22

Right Side of Machine Shown with Machine Parts Removed for a Clearer Image

3. On linkage side needing adjustment (right side shown), remove spring locking pin (E) and rod end (F) from pivot pin (G). Turn rod end (F) on rod (H) in (clockwise) to decrease forward creep and out (counterclockwise) to decrease reverse creep. Repeat procedure, as necessary, on opposite side. Install rod ends back onto arms and secure with spring locking pins.
4. Install style panel and push retainers, seat, seat switch, and steering arm if previously removed.

GH8XT3T,00009C9-19-13JUN22

Adjusting Tracking

If the machine does not track in a straight line while moving in full forward position, the tracking requires adjustment.

1. Park machine safely. (See Parking Safely in the Safety section.)
2. Use tracking adjustment socket found in the glove box of the machine.

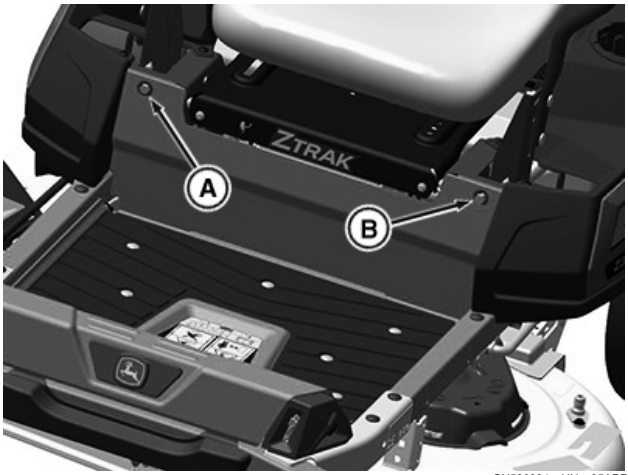

GX536024—UN—25APR22

3. Adjust tracking as follows:

NOTE: Tracking bolts limit top forward speed. If both levers hit against the tracking bolts, turn both bolts counterclockwise equally until only one bolt contacts the lever. This will achieve maximum forward speed.

- If machine tracks to the left, turn tracking bolt (A) clockwise.
- If machine tracks to the right, turn tracking bolt (B) clockwise.

H9PQBYK,0000061-19-11JUL22

Cleaning Transaxle Cooling Fans

CAUTION: Avoid injury! Compressed air can cause debris to fly a long distance.

- **Clear work area of bystanders.**
- **Wear eye protection when using compressed air for cleaning purposes.**
- **Reduce compressed air pressure to specification.**

Specification

Air—Pressure. . . . . 210 kPa (30 psi)

IMPORTANT: To ensure proper cooling, keep the transaxle cooling fins and surrounding area clean at all times. Operating the transaxle with obstructed cooling fins could cause damage due to overheating.

1. Park machine safely. (See Parking Safely in the Safety section.)

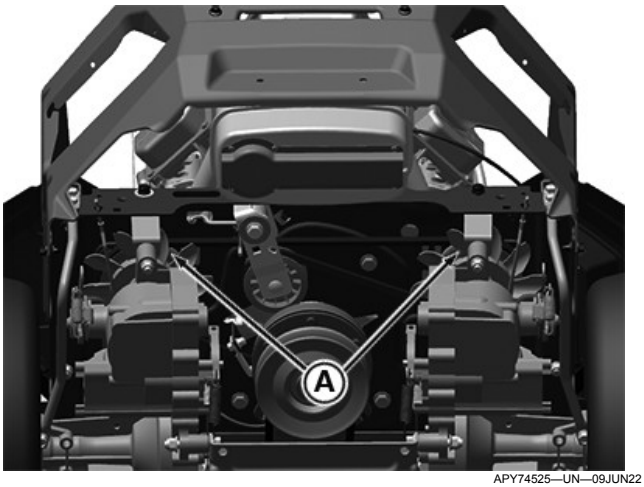

APY74525—UN—09JUN22

2. Clean transaxle fan fins (A) and around exterior of each fan with a rag, brush or compressed air.

gh8xt3t,1654601475909-19-07JUN22

Checking and Replacing Transaxle/Transmission Drive Belt

CAUTION: Avoid injury! Entanglement in a belt or sheave can cause serious injury. Stop engine and wait for all moving parts to stop.

NOTE: The transmission drive belts are self-adjusted using a spring tensioner and do not require a tension adjustment.

Checking Transaxle/Transmission Drive Belts

1. Park machine safely. (See Parking Safely in the Safety section.)

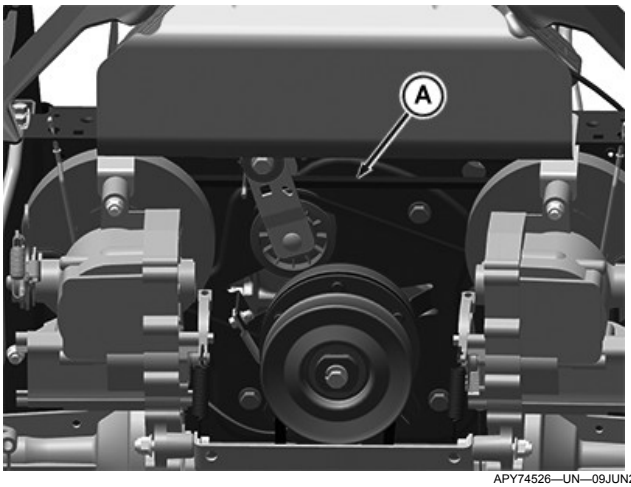

APY74526—UN—09JUN22

2. Inspect drive belt (A) for excessive wear, damage or stretching while in position on all machine sheaves.

Replacing Transaxle/Transmission Drive Belts

1. Park machine safely. (See Parking Safely in the Safety section.)
2. Remove mower deck.

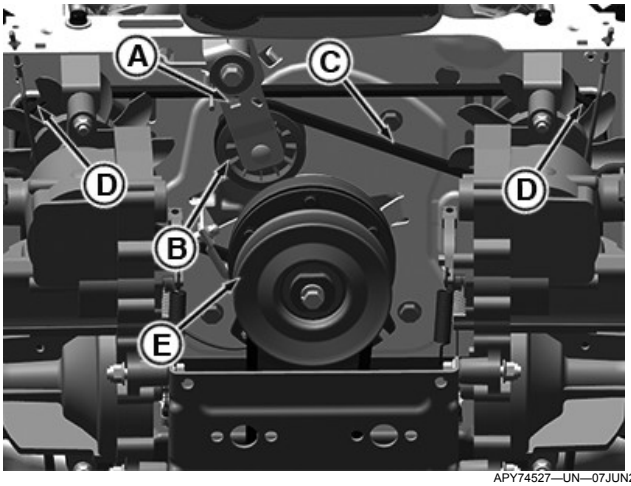

APY74527—UN—07JUN22

Components viewed from bottom.

3. Disconnect electric clutch wiring connector from main wiring harness connector.

CAUTION: Avoid injury! Components are installed under spring tension. Wear eye protection and use proper tools when installing and removing components with spring tension.

4. Insert a 3/8 in. ratchet or breaker bar into the square hole (A) on the idler arm, rotate the spring-loaded idler arm to relieve belt tension on the idler sheave (B) and remove the drive belt (C) from the idler sheave. Release the spring tension from the arm and remove the tool.
5. Remove the drive belt from both transaxle sheaves (D).
6. Remove the drive belt from the engine sheave (E).
7. Position replacement belt onto engine sheave (E), and both transaxle sheaves (D).
8. Rotate the spring-loaded idler arm (A) and install the belt on the idler sheave (B).
9. Connect electric clutch wiring harness connector (A) to main wiring harness.
10. Install mower deck.

gh8xt3t,1654601593685-19-13JUN22

Service Mower

Mower Deck Identification

Mower decks in the following instructions are identified by a code designation. The codes are as follows:

Code	Description
42A	42 inch Accel Deep™
48A	48 inch Accel Deep™
54A	54 inch Accel Deep™

Accel Deep is a trademark of Deere & Company

MX52301,0000F0A-19-28MAR16

Removing and Installing Mower Deck Foot Plate

CAUTION: Avoid injury! Always operate the mower with the foot plate installed. Operating with the foot plate removed can cause serious injury.

Removing Foot Plate

1. Park machine safely. (See Parking Safely in the Safety section.)

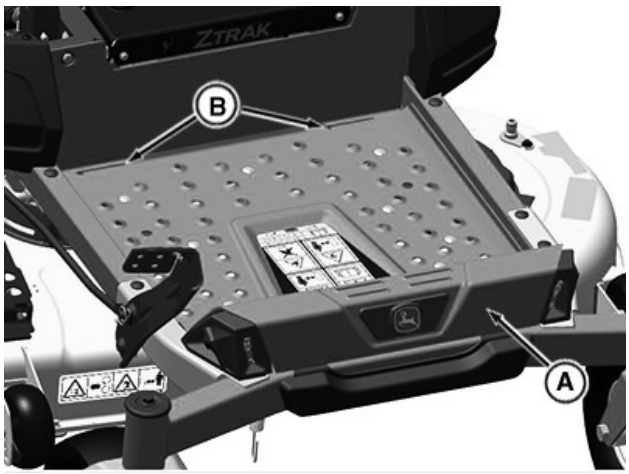

GX536025—UN—25APR22

2. Lift the front end of the foot plate (A).
3. Using both hands, pull the foot plate out of the two openings (B) in the frame.

Installing Foot Plate

1. Using both hands, position the foot plate (A) into the two openings (B) in the frame.
2. Lower the foot plate until it rests securely in place.

H9PQBYK,0000051-19-25APR22

Removing Mower Deck (42A)

1. Park machine safely. (see parking safely in the safety section.)
2. Allow engine and muffler to cool completely.

CAUTION: Avoid injury! Rotating blades are dangerous.

Before adjusting or servicing mower:

- **Disconnect spark plug wires or battery negative (-) cable to prevent engine from starting accidentally.**
- **Always wear gloves when handling mower blades or working near blades.**

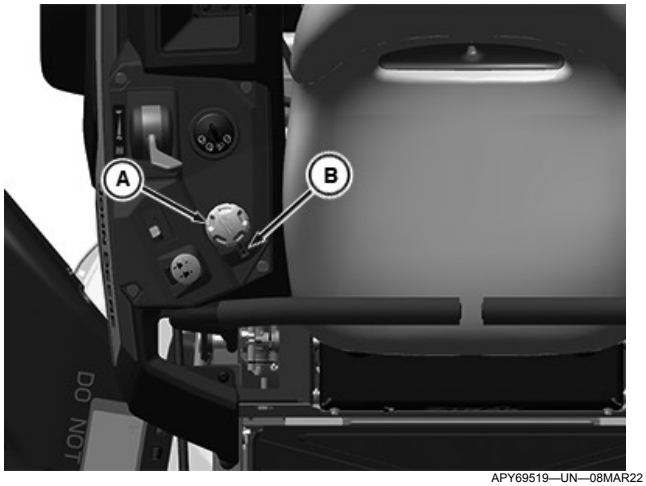

APY69519—UN—08MAR22

3. Rotate the height-of-cut dial (A) in clockwise direction to the lowest range in index mark (B) to lower deck to 1.25" height-of-cut for lockout position.

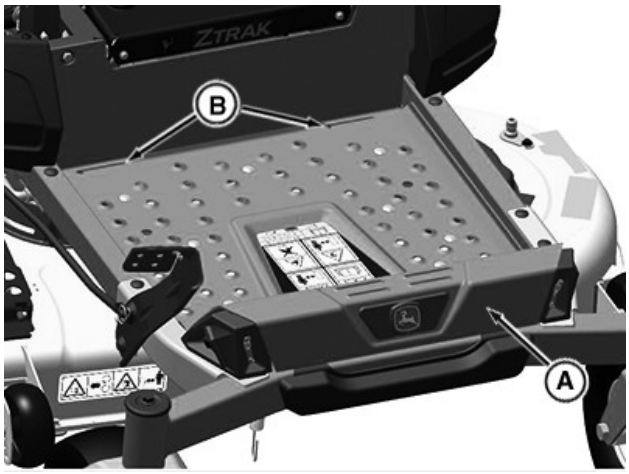

GX536026—UN—25APR22

4. Lift the front end of the foot plate (A) and remove the foot plate from the slots (B).

CAUTION: Avoid injury! Component is spring-assisted and under tension. Injury can occur if spring-assisted component is released suddenly.

5. Disconnect mower drive belt:

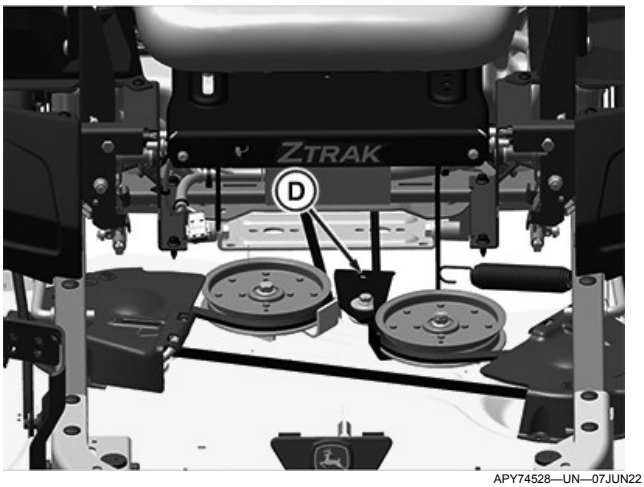

APY74528—UN—07JUN22

- Install 3/8 inch ratchet onto square hole (D) tension arm and rotate counterclockwise to release tension on the belt.

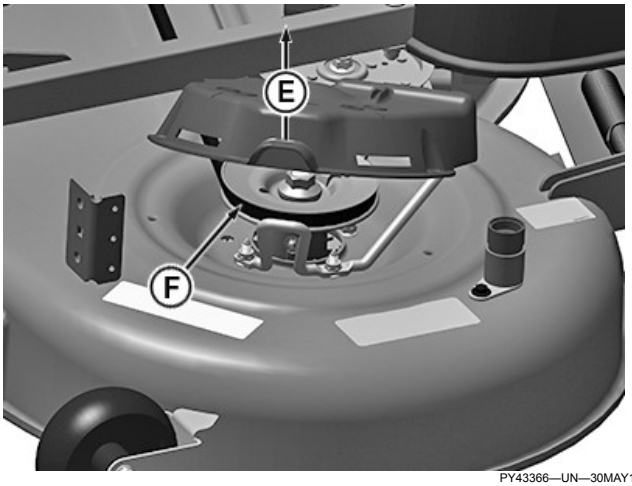

PY43366—UN—30MAY17

- Lift spindle cover (E) while removing mower belt (F) from left spindle sheave.
- Remove belt from the engine sheave.

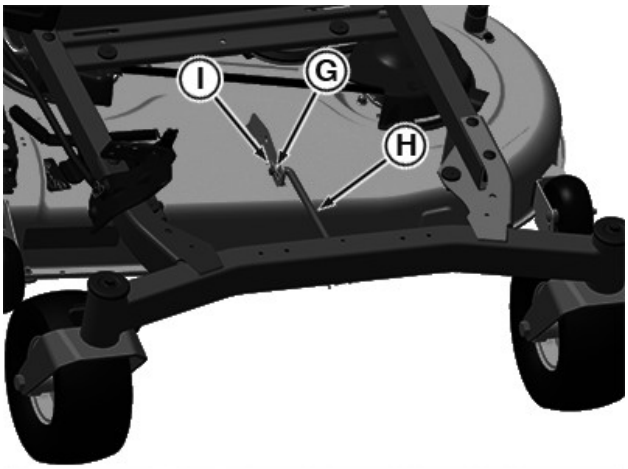

APY69553—UN—18MAR22

6. Remove locking pin and washer (G) and front lift arm (H) from the front deck bracket (I).

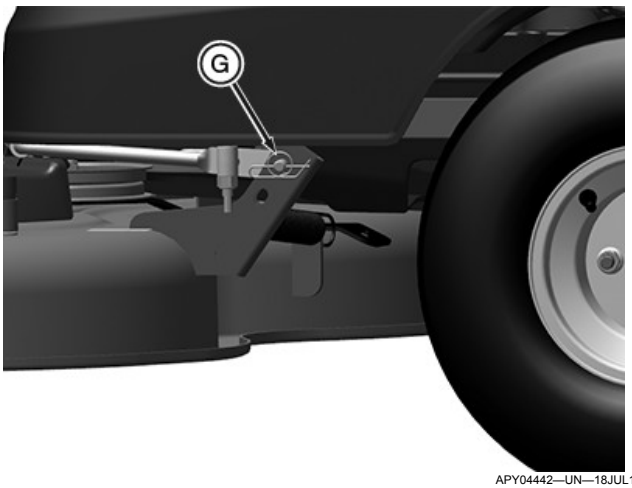

APY04442—UN—18JUL18

42A Mower Deck Left Side Shown

7. Remove spring pin (G) and pin from each side of the rear mower bracket.
8. Rotate front caster wheels to maximize clearance.
9. Slide mower out from under the machine.
   - Do not operate the machine without the mower deck: Machine may become unstable without the mower deck attached. Move machine only by hand. (See Moving Machine by Hand in Operating section.)

GH8XT3T,00008D9-19-07JUN22

Removing Mower Deck (48A and 54A)

1. Park machine safely. (See Parking Safely in the Safety Section.)
2. Allow the engine and muffler to cool completely.

CAUTION: Avoid injury! Rotating blades are dangerous. Before adjusting or servicing mower:

• Disconnect spark plug wires or battery negative (-) cable to prevent engine from starting accidentally.

• Always wear gloves when handling mower blades or working near blades.

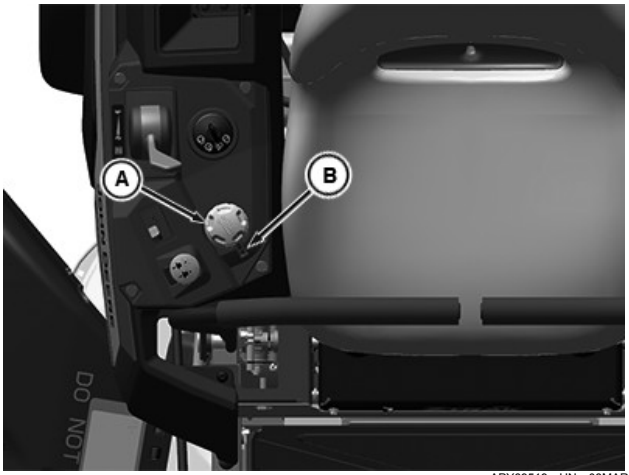

APY69519—UN—08MAR22

3. Rotate the height-of-cut dial (A) in clockwise direction to the lowest position (1.25") in the index mark (B) to lock position.

APY540989—UN—05JUL22

4. Use the tracking adjustment socket (A) found in the glove box to lock the lift system when removing the deck.

NOTE: Use of the tracking adjustment socket restrains the lift spring from rotating the rockshaft.

5. Disconnect mower drive belt:

CAUTION: Avoid injury! Component is spring-assisted and under tension. Injury can occur if spring-assisted component is released suddenly.

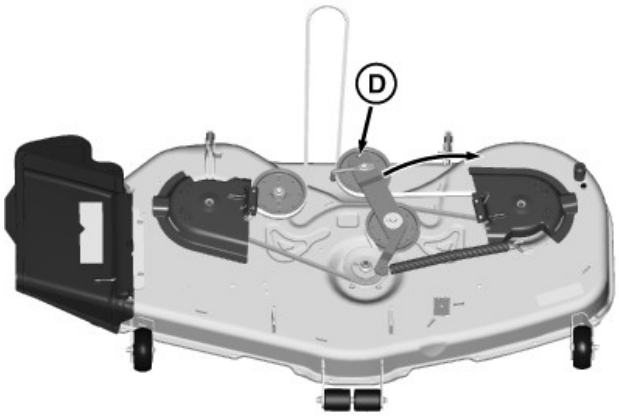

GXT002904—UN—10JUN16
Deck Shown Removed from Machine for Better View

- From the left side of machine, insert a 3/8 inch ratchet into square hole (D) in the tension arm, and pull clockwise and hold to release tension on belt.

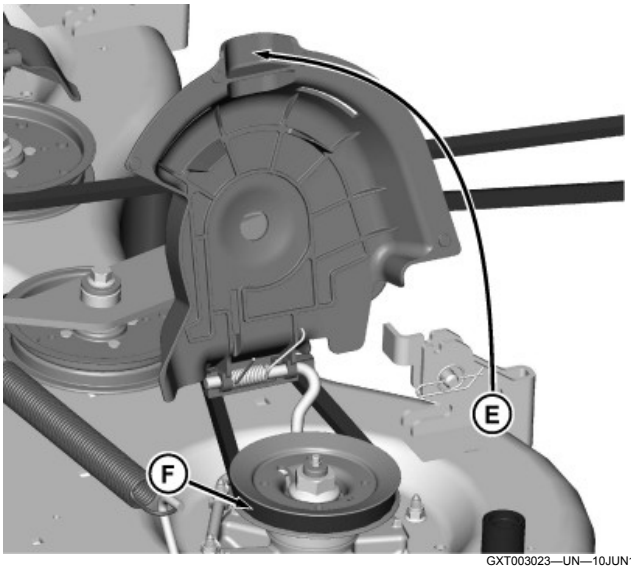

GXT003023—UN—10JUN16
Deck Shown Removed from Machine for Better View.

- Raise left spindle cover (E) and remove belt (F) from spindle.
- Remove belt from clutch sheave.

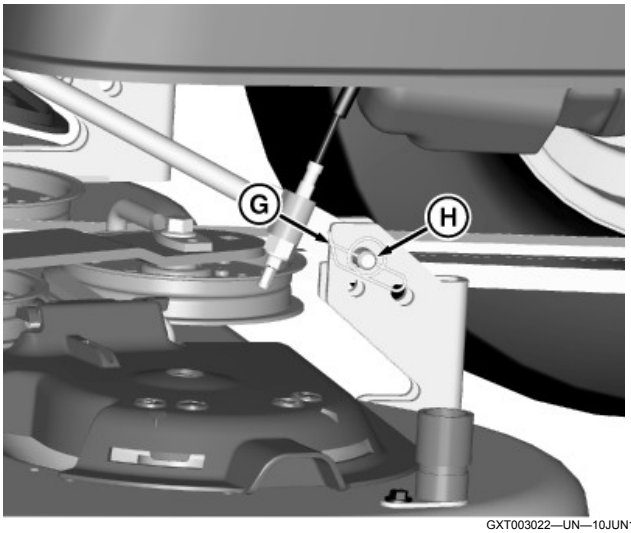

GXT003022—UN—10JUN16

6. Remove spring pin (G) and pin (H) from each side of the rear hanger bracket.

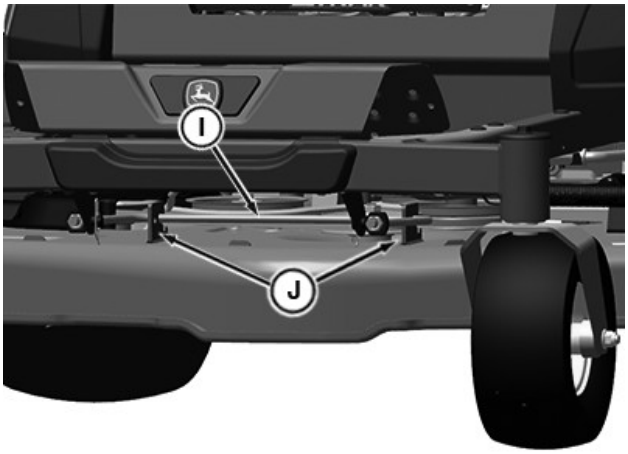

APY536726—UN—09MAY22

7. **48A and 54A Mower Decks Only:** Move mower deck forward to remove front draft link (I) from the mower deck brackets (J).
8. Rotate the height-of-cut dial (A) in counterclockwise direction to the highest range in the index mark (B) to lock deck in raise position.
9. Rotate front caster wheels to maximize clearance.
10. Slide mower out from under the machine.
    - Do not operate the machine without the mower deck, Machine may become unstable without the mower deck attached. Move machine only by hand. (see moving machine by hand in operating section.)

GH8XT3T,00008DA-19-08JUL22

Installing Mower Deck (42A)

1. Park machine safely. (See Parking Safely in the Safety section.)
2. Allow engine and muffler to cool completely.

CAUTION: Avoid injury! Rotating blades are dangerous.

Before adjusting or servicing mower:

- **Disconnect spark plug wires or battery negative (-) cable to prevent engine from starting accidentally.**
- **Always wear gloves when handling mower blades or working near blades.**

3. Rotated the height-of-cut dial counterclockwise direction to lock in raise position.
4. Remove belt from the mower right-hand spindle sheave to allow more slack for installation of the belt onto clutch.
5. Slide mower deck under machine.

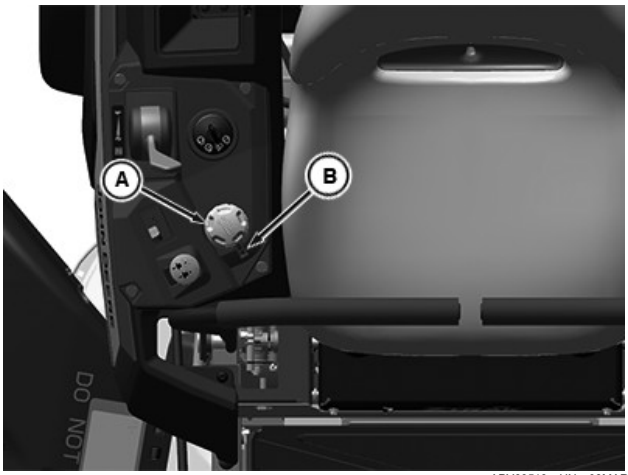

APY69519—UN—08MAR22

6. Rotate the height-of-cut dial (A) clockwise direction to the lowest range in index mark (B) to lock deck in lowered position.

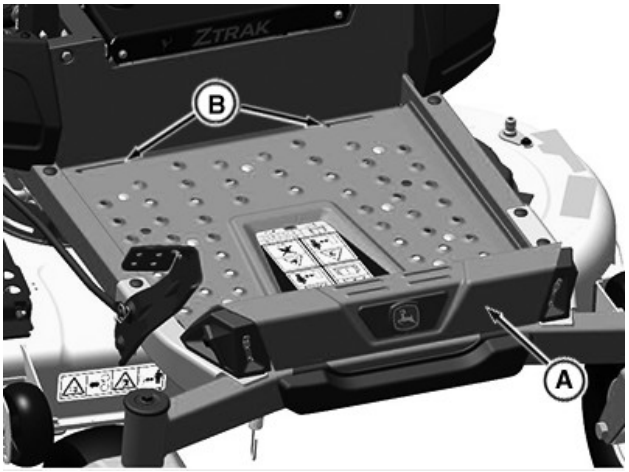

GX536025—UN—25APR22

7. Lift the front end of the foot plate (A) and remove the foot plate from the slots (B).

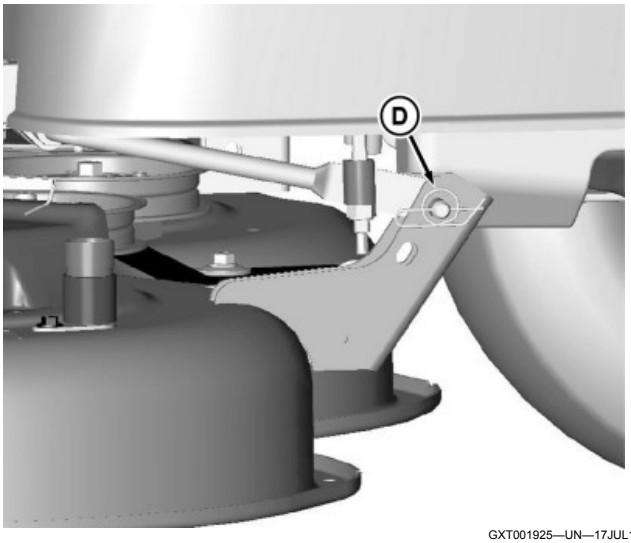

GXT001925—UN—17JUL15

8. Install pin and spring pin (D) onto each side of the rear mower bracket.

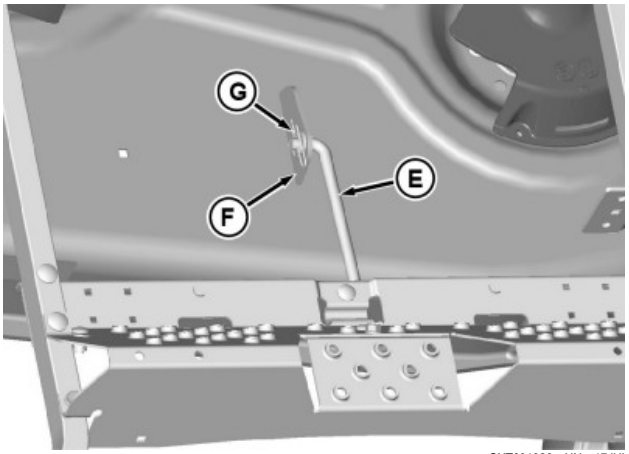

GXT001926—UN—17JUL15

9. Install front lift arm (E) onto the front deck bracket (G) and secure with washer and locking pin (F).

CAUTION: Avoid injury! Component is spring-assisted and under tension. Injury can occur if spring-assisted component is released suddenly.

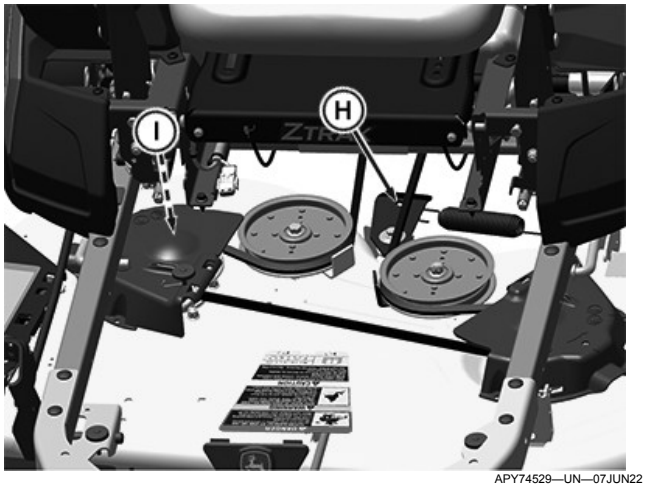

APY74529—UN—07JUN22

10. Connect mower drive belt:
    - Install belt onto the engine sheave.

    IMPORTANT: Avoid damage! Left and right spindle sheaves are hidden by belt shields. Failure to position the belt properly on sheaves may result in belt damage.

    - Install 3/8 inch ratchet onto the square hole (H) in the tension arm and rotate counterclockwise to release tension on the belt. Lift right spindle cover and install belt onto right spindle sheave (I). Make sure that belt is properly seated on all sheaves.
11. Flip up left and right spindle covers to verify that belt is properly seated in both spindle sheaves.
12. Install foot plate.

GH8XT3T,00008DB-19-13JUN22

Installing Mower Deck (48A and 54A)

1. Park machine safely. (See Parking Safely in the Safety Section.)
2. Allow engine and muffler to cool completely.

CAUTION: Avoid injury! Rotating blades are dangerous. Before adjusting or servicing mower:

• Disconnect spark plug wires or battery negative (-) cable to prevent engine from starting accidentally.

• Always wear gloves when handling mower blades or working near blades.

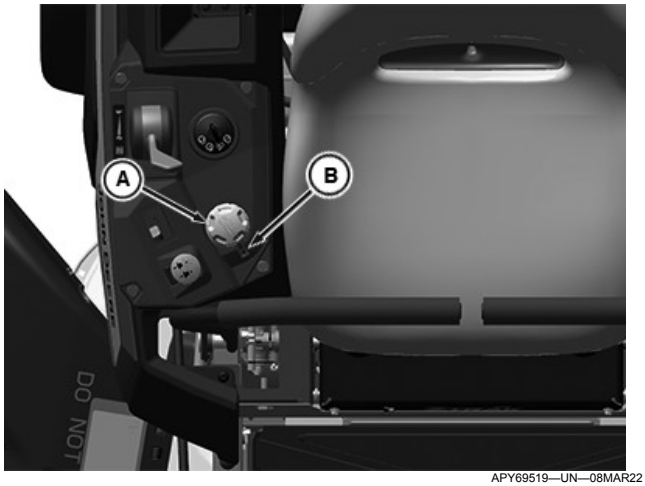

APY69519—UN—08MAR22

3. Rotate the height-of-cut dial (A) counterclockwise direction to the highest range in index mark (B) to raise mower deck.

NOTE: Ensure to remove the tracking adjustment socket used for lift system before installation of mower deck.

4. Slide mower deck under machine.

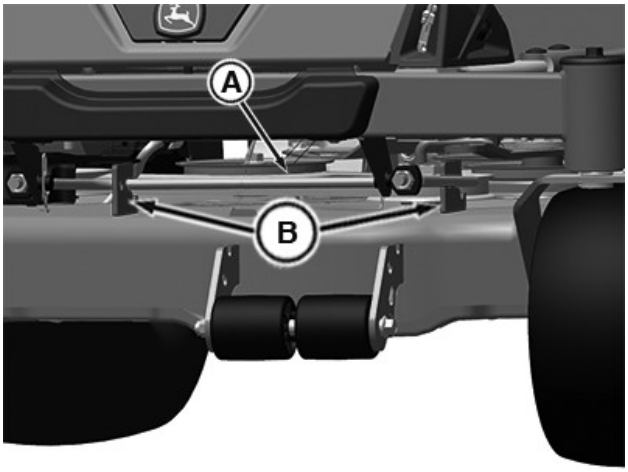

APY69550—UN—07MAR22

5. Move mower deck forward and lower front draft rod (A) into the front mower deck brackets (B).

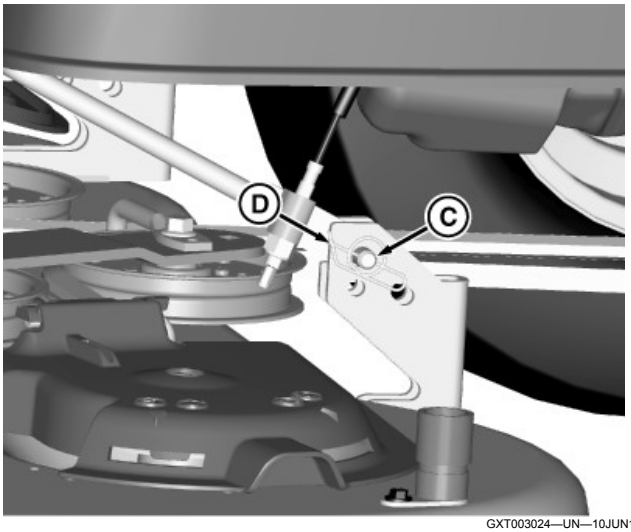

GXT003024—UN—10JUN16

6. Lower mower lift lever, and install the pin (C) and spring pin (D) onto each side of the rear mower bracket.

CAUTION: Avoid injury! Component is spring-assisted and under tension. Injury can occur if spring-assisted component is released suddenly.

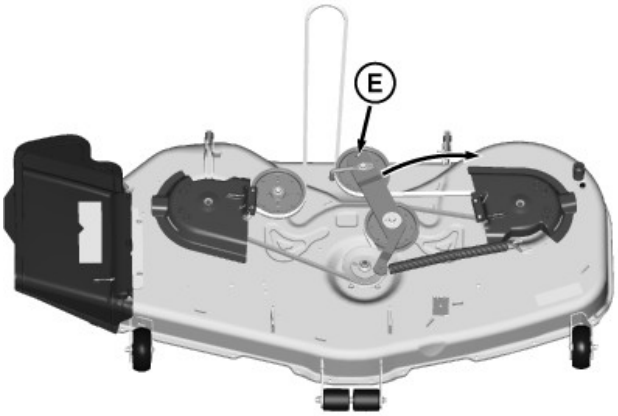

GXT003026—UN—10JUN16

48A shown

7. Connect mower drive belt:
   - Install belt onto the engine sheave.

IMPORTANT: Avoid damage! Left and right spindle sheaves are hidden by belt shields. Failure to position the belt properly on sheaves may result in belt damage.

   - Insert 3/8 inch ratchet onto the square hole (E) in the tension arm. Rotate arm clockwise and hold to release spring tension on idler sheave.

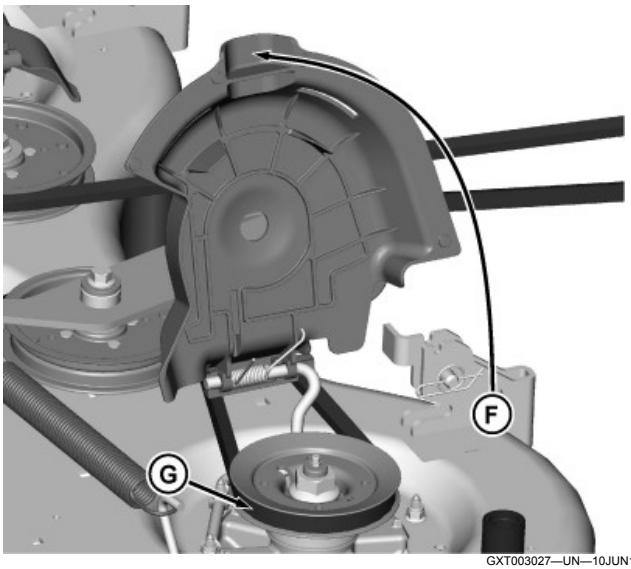

GXT003027—UN—10JUN16

   - Lift left spindle cover (F) and install mower belt (G) onto left spindle sheave. Release spindle cover and tension arm.
   - Flip up left and right spindle covers to check that belt is correctly routed on all sheaves.

GH8XT3T,00008DC-19-08JUL22

Replacing Mower Drive Belt (42A Mower)

1. Park machine safely. (See Parking Safely in Safety section.)
2. Allow engine and muffler to cool completely.
3. Remove mower deck.

CAUTION: Avoid injury! Components are installed under spring tension. Wear eye protection and use proper tools when installing and removing components with spring tension.

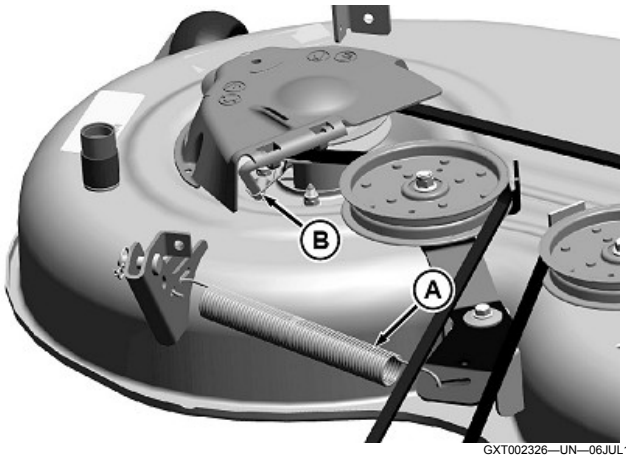

GXT002326—UN—06JUL15

4. Remove spring (A) from tension arm.

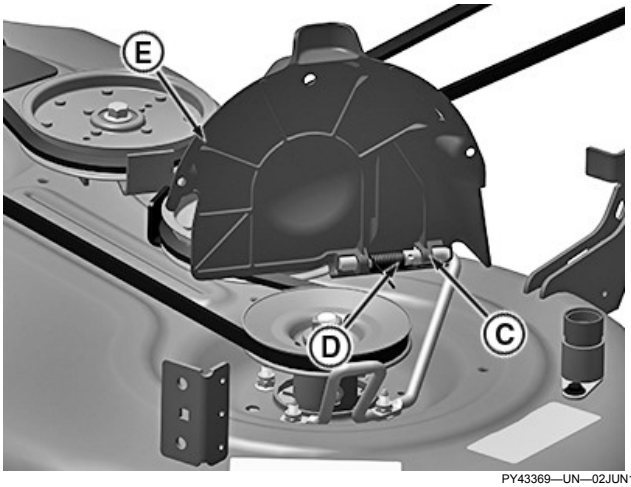

PY43369—UN—02JUN17

5. Lift left spindle cover. Align keyway in shield (C) with stake in wire form (D) and slide spindle cover (E) off wire form.
6. Repeat step 4 and 5 to remove right spindle cover.

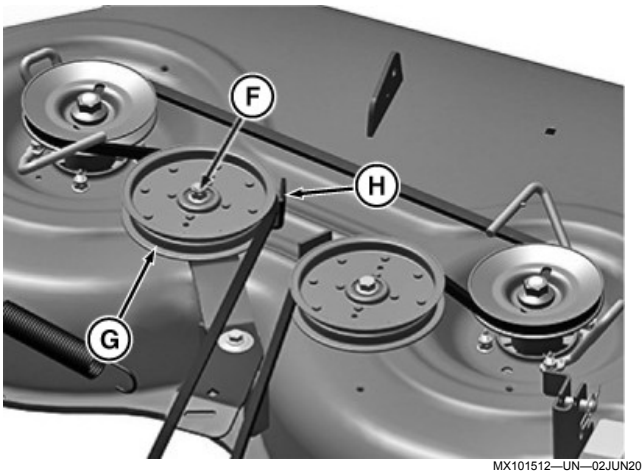

MX101512—UN—02JUN20

7. Remove nut (F) on tension arm and lift sheave (G) up to remove belt from guide (H).

8. Remove belt from deck and inspect for wear or damage; replace as necessary.
9. Clean top surface of mower deck and sheaves.
10. Install belt on mower deck as shown.

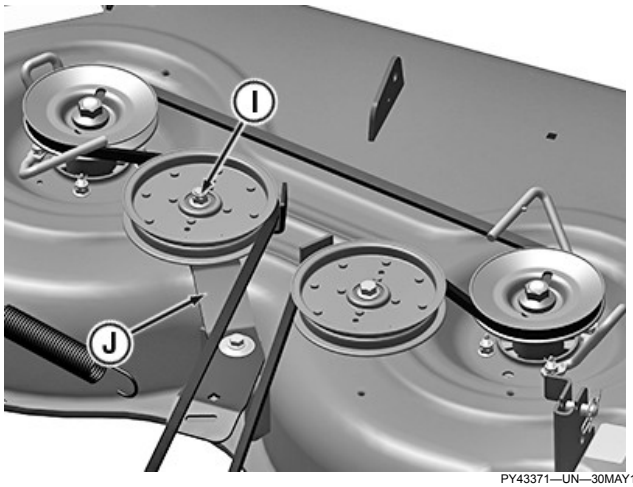

PY43371—UN—30MAY17

Shown without sheave for clarity only.

11. Make sure sheave carriage bolt (I) is fully seated into tension arm (J). Install sheave with belt on tension arm.
12. Tighten sheave hardware to specification.

Specification

Sheave—Torque. . . . . 47 N·m (35 lb·ft)

13. Make sure that belt is properly seated on all sheaves.
14. Install left and right spindle covers on wire forms.
15. Install spring on tension arm.
16. Install mower deck.

RM87422,0000747-19-02JUN20

Replacing Mower Drive Belt (48A and 54A Mower Decks)

1. Park machine safely. (See Parking Safely in Safety section.)
2. Allow engine and muffler to cool completely.
3. Remove mower deck.
4. Remove deck drive belt as follows:

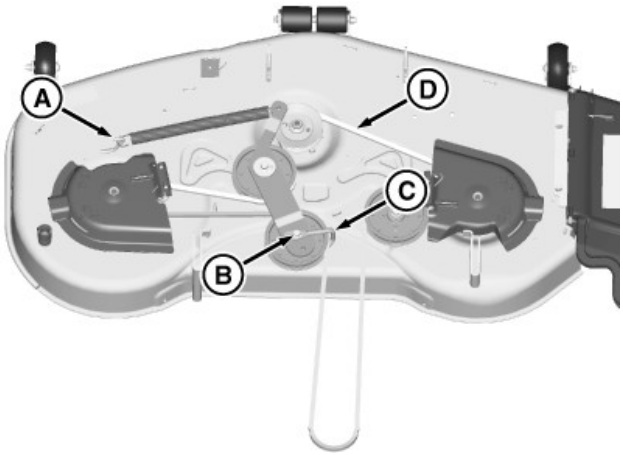

GXT002905—UN—10JUN16

- Remove spring from welded spring hook (A) on deck.
- Remove nut (B) on the tension sheave and lower bolt to remove guide (C). Remove belt (D) from all sheaves.

5. Inspect belt for wear or damage; replace as necessary.
6. Clean top surface of the mower deck and sheaves.

IMPORTANT: Avoid damage! Left and right spindle sheaves are hidden by belt shields. Failure to position the belt properly on sheaves may result in belt damage.

7. Install belt on the mower deck as shown.
8. Make sure belt guide (C) is indexed as shown and tighten nut (B) to specification.

Specification

Sheave Nut—Torque. . . . . 47 N·m (35 lb·ft)

9. Install spring on welded spring hook (A) on deck.
10. Install mower deck.

MX52301,0000F07-19-01JUN20

Installing MulchControl Discharge Plate (If Equipped)

CAUTION: Avoid injury! Machine component or attachment is heavy. Use a safe lifting device or get an assistant to help lift, install, or remove component or attachment.

NOTE: For ease of installation, place mower deck in the vertical position.

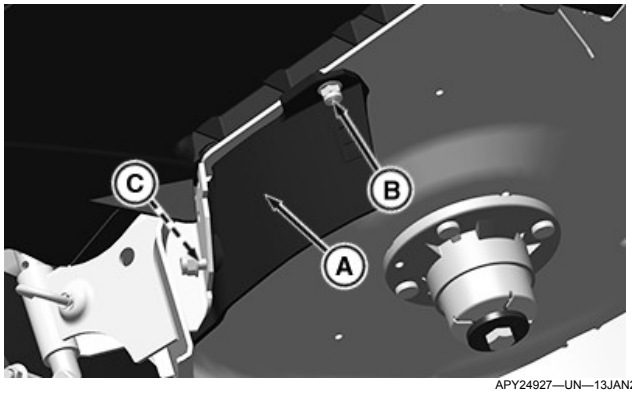

APY24927—UN—13JAN20

1. Position discharge plate (A) as shown.
2. Insert M8 x 20 carriage bolt (B) through the mower deck and into the hole in the discharge plate.
3. Install M8 lock nut on bolt (B). Do not tighten yet.
4. Insert M8 shoulder bolt (C) through the discharge plate and into the hole in the mower deck.
5. Install M8 lock nut on bolt (C).
6. Tighten nuts.

Specification

M8 Nut—Torque. . . . . 20 N·m (15 lb·ft)

SB31882,00003E0-19-02JUN20

Installing MulchControl Deflector (If Equipped)

CAUTION: Avoid injury! Machine component or attachment is heavy. Use a safe lifting device or get an assistant to help lift, install, or remove component or attachment.

NOTE: For ease of installation, place mower deck in the vertical position.

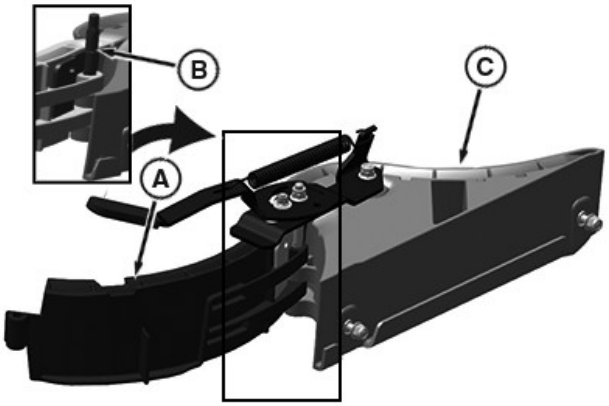

APY24928—UN—26MAY20

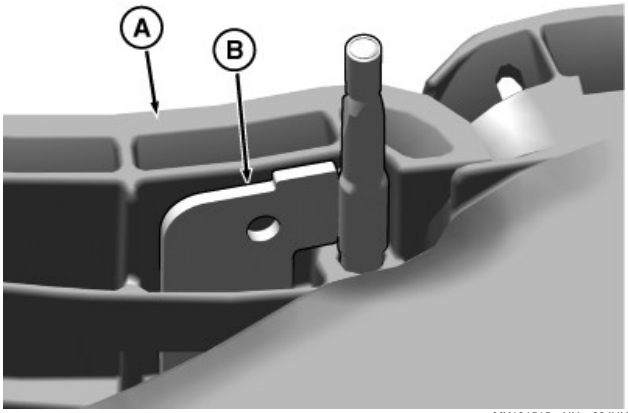

MX101515—UN—03JUN20

1. Assemble kit gate (A) and baffle (C) together as shown and insert the pin (B) in the slots.

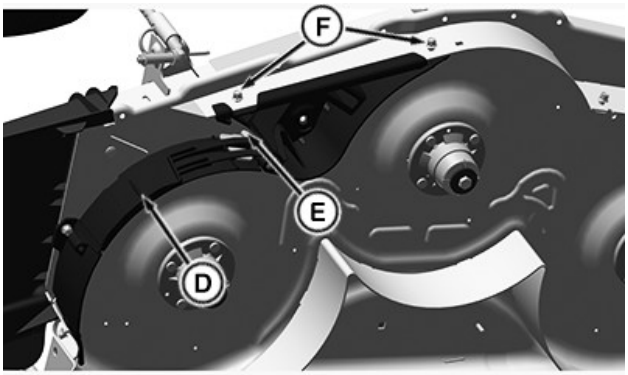

APY24929—UN—11DEC19

2. Install right deflector assembly (D) to the mower deck using M8 shoulder bolts (F) and M8 nuts.
3. Ensure the pin (E) is in the correct slot and that the gate door can open and close.
4. Tighten lock nuts.

Specification

M8 Lock Nut—Torque. . . . . 20 N·m (15 lb·ft)

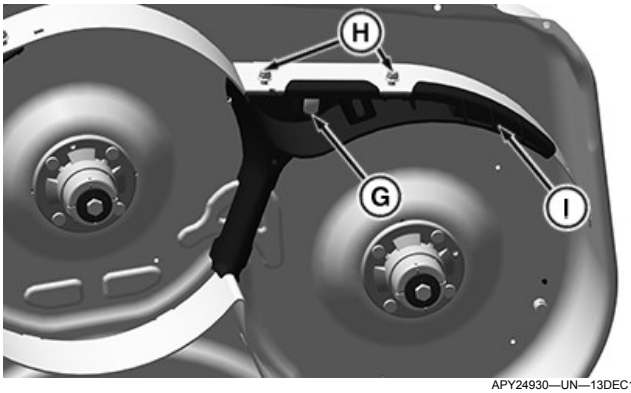

APY24930—UN—13DEC19

5. Install left deflector assembly (I) to the mower deck as shown using M8 shoulder bolts (H) and M8 nuts.
6. On the top side of deck, install M8 lock nut on shoulder bolt (G).
7. Tighten lock nuts.

Specification

M8 Lock Nut—Torque. . . . . 20 N·m (15 lb·ft)

SB31882,00003E1-19-03JUN20

Installing MulchControl Handle (If Equipped)

CAUTION: Avoid injury! Machine component or attachment is heavy. Use a safe lifting device or get an assistant to help lift, install, or remove component or attachment.

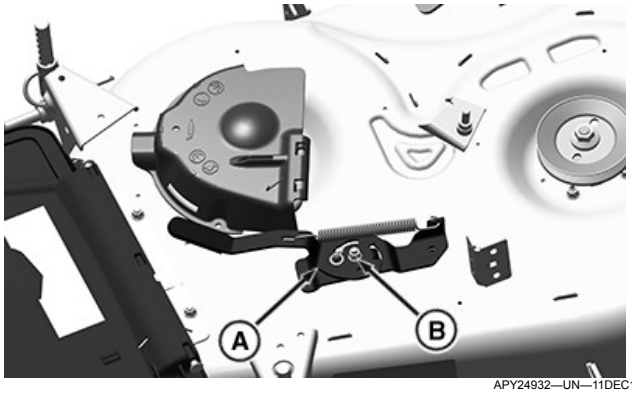

APY24932—UN—11DEC19

1. Install handle assembly (A) to hinge pin with a M8 lock nut (B). Tighten lock nut until snug on handle.

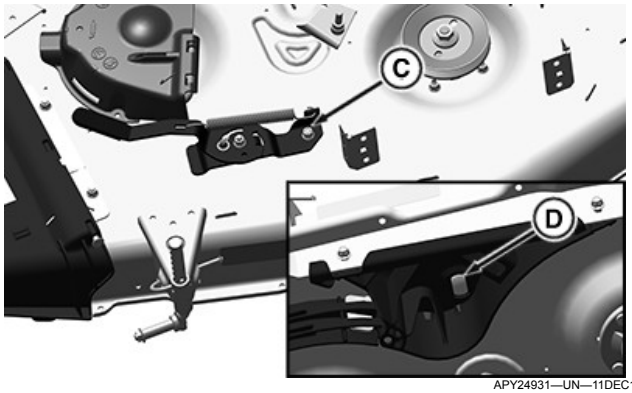

APY24931—UN—11DEC19

2. On the top side of deck, install M8 lock nut (C) on the shoulder bolt (D) to secure handle assembly.

Specification

M8 Nut—Torque. . . . . 20 N·m (15 lb·ft)

SB31882,00003E2-19-02JUN20

Removing and Storing MulchControl Deck (If Equipped)

Removing MulchControl™

1. Remove the mower deck. (See Removing Mower Deck in this section of the manual.)

CAUTION: Avoid injury! Blades are sharp. Always wear gloves when handling blades or working near blades. Replace blades if defective. Never straighten or weld them.

2. Remove mulch blades.

MulchControl is a trademark of Deere & Company

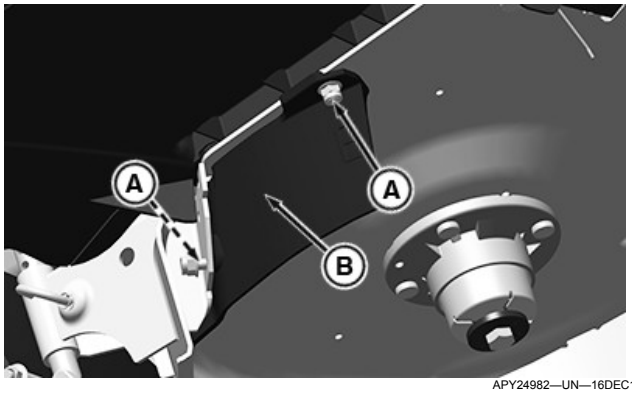

APY24982—UN—16DEC19

3. Remove discharge plate (B) from discharge area by removing the hex flange bolts (A) and hex flange nuts.

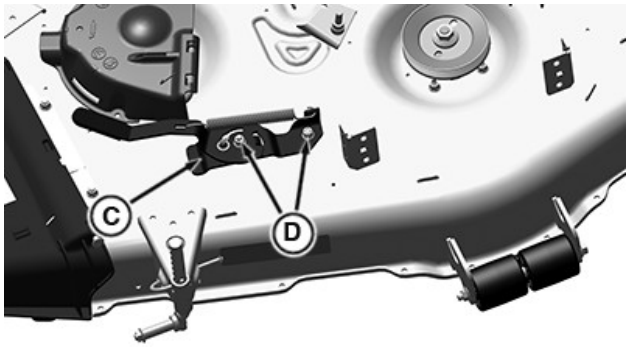

APY24977—UN—16DEC19

4. Loosen nuts (D) and remove the handle assembly (C).

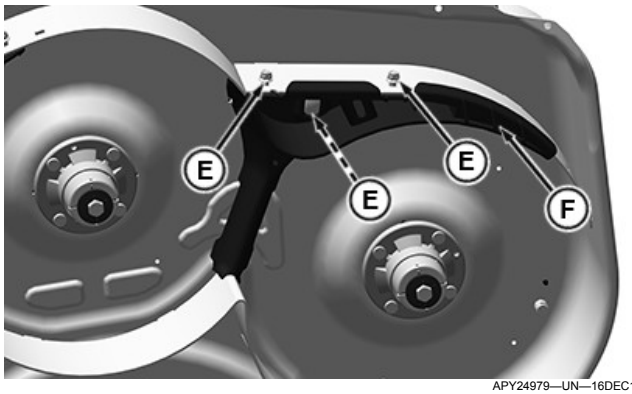

APY24979—UN—16DEC19

5. Loosen hex nuts (E) and remove M8 bolts and then remove the LHS deflector assembly (F).

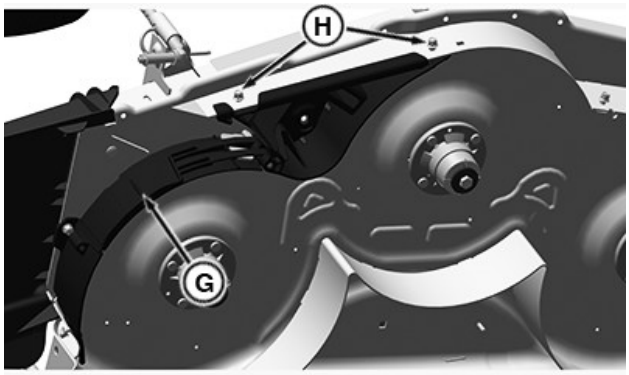

APY24980—UN—16DEC19

6. Loosen hex nuts (H) and remove M8 bolts and then remove the RHS deflector assembly (G).

Storing MulchControl™

Clean and store all MulchControl™ parts in a clean, dry place.

SB31882,00003E5-19-10JUN20

Installing Mulch Blades

CAUTION: Avoid injury! Blades are sharp. Always wear gloves when handling blades or working near blades. Replace blades if defective. Never straighten or weld them.

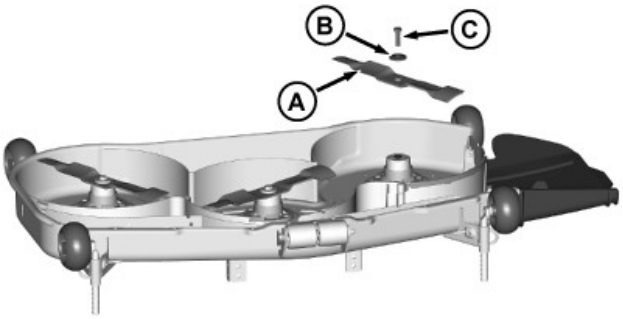

MXT015291—UN—19AUG15

1. Install blade (A) with cutting edge toward the ground.
2. Install large washer (B) and bolt (C).
3. Insert wood block between blade and mower to prevent the blade from turning when tightening bolt.
4. Tighten bolt.

Specification

Blade Bolt—Torque. . . . . 68 N·m (50 lb·ft)

5. To check blade-to-mulch baffle clearance, rotate blades by hand. If interference occurs, check that hardware is tightened.

SB31882,00003E3-19-27MAY20

Checking for Bent Mower Blades

CAUTION: Avoid Injury! Blades are sharp. Always wear gloves when handling blades or working near blades.

Replace blades if defective. Never straighten or weld them.

1. Park machine safely. (See Parking Safely in the SAFETY section.)
2. Raise mower deck to highest position to access blades.

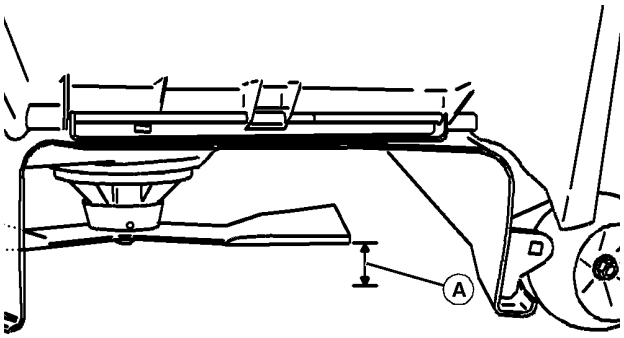

MXAL42867—UN—09APR13

Mower deck with side discharge used for illustration

3. Measure distance (A) between blade tip and flat ground surface.
4. Rotate blade 180° and measure distance between other blade tip and flat ground surface.
5. Install new blade if the difference between the two measurements is more than 3 mm (1/8 in).
6. Repeat for all blades.

MP47322,00F466C-19-25JUL18

Servicing Mower Blades

CAUTION: Avoid injury! Rotating blades are dangerous.

Before adjusting or servicing mower:

- **Disconnect spark plug wire(s) or battery negative (-) cable to prevent engine from starting accidently.**
- **Always wear gloves when handling mower blades or working near blades.**

Removing Mower Blades (42A, 48A, and 54A Mower Decks)

1. Park machine safely. (See Parking Safely in the SAFETY section.)
2. Raise mower deck to gain access to mower blades. If necessary, remove mower deck.
3. Block mower blade with a piece of wood to prevent it from spinning.

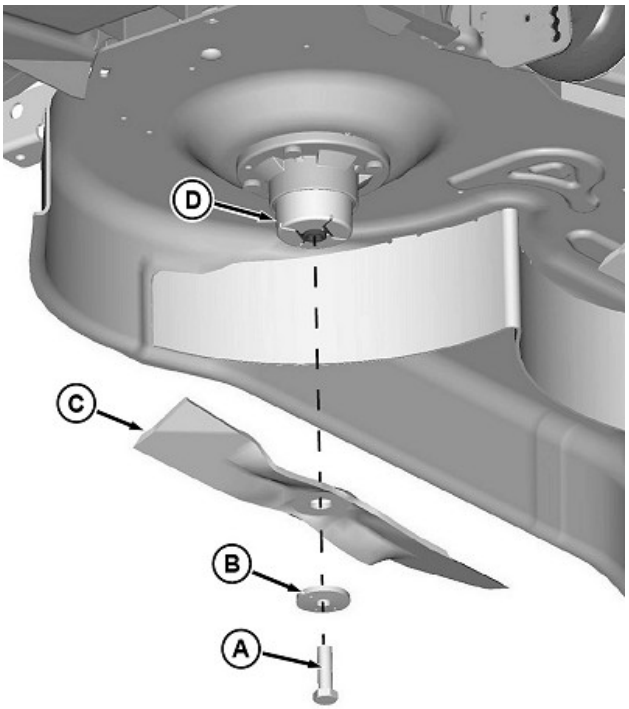

GXT001605—UN—13MAY15

4. Loosen and remove bolt (A), washer (B), and blade (C) from spindle (D).
5. Inspect blades; sharpen, balance or replace blades as necessary.

Installing Mower Blades (42A, 48A, and 54A Mower Decks)

1. Make sure deflector cup (D) is seated properly between mower spindle and blade.
2. Position mower blade (C) with cutting edge toward ground onto mower spindle.
3. Install washer (B), with cupped side towards blade, and bolt (A) to secure blade onto spindle shaft.
4. Block mower blade with a piece of wood to prevent spinning and tighten bolt to specification.

MulchControl is a trademark of Deere & Company

Specification

Mower Blade Bolt—Torque. . . . . 68 N·m (50 lb·ft)

MX52301,0000F09-19-28MAR16

Service Electrical

Electrical

WARNING: Avoid injury! Battery posts, terminals and related accessories contain lead and lead components, chemicals known to the State of California to cause cancer and reproductive harm. **Wash hands after handling.**

MP47322,00F466E-19-03MAY20

Service the Battery Safely

MXAL42869—UN—09APR13

CAUTION: Avoid injury! The battery produces a flammable and explosive gas.

To prevent the battery from exploding:

- **Do not smoke or have open flame near battery.**
- **Wear eye protection and gloves.**
- **Do not allow direct metal contact across battery posts.**
- **Remove negative cable first when disconnecting.**
- **Install negative cable last when connecting.**

MP47322,00F466F-19-13JAN15

Removing and Installing the Battery

Removing

1. Park machine safely. (See Parking Safely in the Safety section.)
2. Rotate operator seat forward.
3. Remove battery compartment cover.

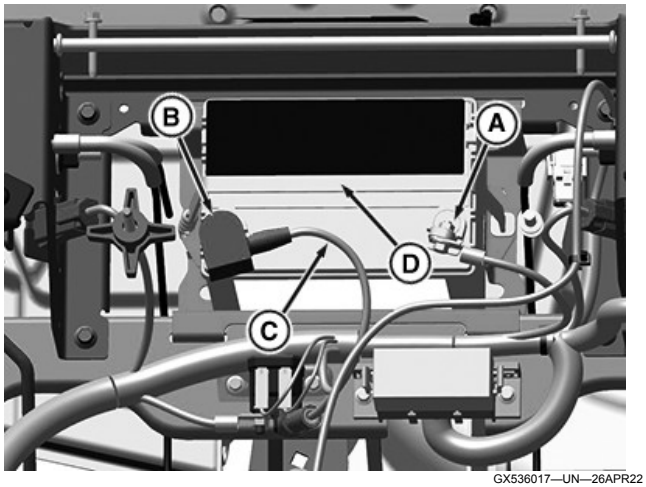

GX536017—UN—26APR22

4. Disconnect negative (-) battery cable (A).
5. Push red cover (B) away from positive (+) battery terminal and remove cable (C) from battery.
6. Remove strap (D).
7. Remove battery.

Installing

1. Place battery into the battery tray as shown.
2. Put battery strap.
3. Connect positive (+) cable to battery first, then negative (-) cable.
4. Apply general-purpose grease or silicone spray to terminals to help prevent corrosion.
5. Slide red cover over the positive battery terminal.
6. Install battery compartment cover.
7. Lower operator seat.

H9PQBYK,0000050-19-21APR22

Cleaning Battery and Terminals

1. Park machine safely. (See Parking Safely in the Safety section.)
2. Disconnect and remove battery.
3. Wash battery with solution of four tablespoons of baking soda to one gallon of water. Be careful not to get the soda solution into the cells.
4. Rinse the battery with plain water and dry.
5. Clean terminals and battery cable ends with wire brush until bright.
6. Install battery.
7. Attach cables to battery terminals, beginning with the positive cable, using washers and nuts.
8. Apply general purpose grease or silicone spray to terminals to help prevent corrosion.

MG39705,00000D8-19-13JUN22

Using Booster Battery

CAUTION: Avoid injury! The battery produces a flammable and explosive gas.

To prevent the battery from exploding:

- **Do not smoke or have open flame near battery.**
- **Wear eye protection and gloves.**
- **Do not jump-start or charge a frozen battery. Warm battery to:**

Specification

Battery—Temperature. . . . . 16°C (60°F)

- **Do not connect the negative (-) booster cable to the negative (-) terminal of the discharged battery. Connect at a good ground location away from the discharged battery.**

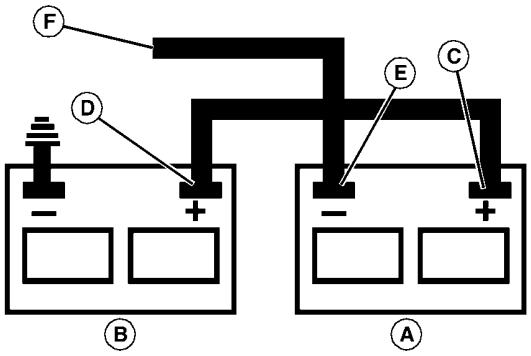

MXAL42872—UN—09APR13

A—Booster Battery
B—Disabled Vehicle Battery
C—Positive (+) Post
D—Positive (+) Post
E—Negative (-) Post
F—Negative (-) Booster Cable End

1. Connect positive (+) booster cable to booster battery (A) positive (+) post (C).
2. Connect the other end of positive (+) booster cable to the disabled vehicle battery (B) positive (+) post (D).
3. Connect negative (–) booster cable to booster battery negative (–) post (E).

IMPORTANT: Avoid damage! Electric charges from the booster battery damages machine components. Do not install negative booster cable to machine frame. Install only to the engine block.

Install negative booster cable away from moving parts in the engine compartment, such as belts and fan blades.

4. Connect the other end (F) of negative (–) booster cable to a metal part of the disabled machine engine block away from battery.
5. Start the engine of the disabled machine and run machine for several minutes.
6. Carefully disconnect the booster cables in the exact reverse order: negative cable first and then the positive cable.

MP47322,00F4672-19-03NOV21

Replacing Fuse

1. Park machine safely. (See Parking Safely in the safety section.)
2. Raise operator's seat.
3. Remove battery compartment cover.
4. Refer to the service label under the seat pan for fuse circuit identification and location.
5. Remove the fuse and check metal strip in fuse window. Discard fuse(s) if strip is broken.
6. Push new, correct amp, fuse into correct socket.
7. Lower operator's seat.

gh8xt3t,1654603461613-19-07JUN22

Replacing Fuse

1. Park machine safely. (See Parking Safely in the Safety section.)
2. Raise operator's seat.
3. Remove battery compartment cover.
4. Refer to the service label behind the operator's seat for fuse circuit identification and location.
5. Remove the fuse and check metal strip in fuse window. Discard fuse(s) if strip is broken.
6. Push new, correct amp, fuse into correct socket.
7. Lower operator's seat.

MP47322,00F4673-19-13JUN22

Service Miscellaneous

Gasoline Fuel for 4-Cycle Engines

Use unleaded gasoline with a minimum octane rating of 87 AKI (anti-knock index) or 90 RON (research octane number). Gasoline fuels specified to EN 228 or ASTM D4814 are recommended.

Fuel blends of unleaded gasoline with a maximum 10% ethanol or 15% MTBE (methyl tertiary-butyl ether) are also acceptable.

CAUTION: Reduce the risk of fire. Handle fuel carefully. DO NOT fill the fuel tank when the engine is running or hot. Stop engine and allow it to cool for several minutes before filling fuel tank. Fill fuel tank only to the bottom of the filler neck.

Refuel outdoors. DO NOT smoke while you fill the fuel tank or service the fuel system.

Store fuel in properly identified polyethylene containers.

When storing fuel, add John Deere Gasoline Conditioner and Stabilizer (or equivalent) at the specified concentration.

IMPORTANT: DO NOT use methanol or fuel blends that contain methanol.

Avoid spilling fuel. Gasoline can damage plastic and painted surfaces.

DO NOT mix oil with gasoline.

DX,FUEL2-19-15MAY13

Filling Fuel Tank

CAUTION: Avoid injury! Fuel vapors are explosive and flammable:

- **Shut engine off before filling fuel tank.**
- **Allow engine to cool before refueling.**
- **Do not smoke while handling fuel.**
- **Keep fuel away from flames or sparks.**
- **Fill fuel tank outdoors or in ventilated area.**
- **Clean up spilled fuel immediately.**
- **Prevent static electric discharge by using a clean, approved, non metal container.**

IMPORTANT: Avoid damage! Dirt and water in fuel causes engine damage:

- **Clean dirt and debris from the fuel tank opening.**
- **Use clean, fresh, stabilized fuel.**
- **Fill the fuel tank at the end of operation each day to prevent condensation and freezing during cold weather.**

- **If using a funnel, make sure it is plastic and has no screen or filter.**

1. Park machine safely. (See Parking Safely in the Safety section.)
2. Allow engine to cool.
3. Remove any debris from area around fuel tank cap.
4. Remove fuel tank cap slowly to allow any pressure built up in tank to escape.
5. Fill fuel tank only to bottom of filler neck. Do not overfill.

NOTE: On some models, the fuel tank cap will click when it is tight.

6. Install fuel tank cap and turn cap until it is tight.

MP47322,00F4675-19-24AUG21

Lifting Machine

1. Park machine safely. (See Parking Safely in the Safety section.)

CAUTION: Avoid injury! The machine can fall or slip from an unsafe lifting device or supports.

- **Use a safe lifting device rated for the load to be lifted.**
- **Lower machine onto jackstands or other stable supports and block wheels before servicing.**

NOTE: Remove any material collection system attachments prior to lifting machine.

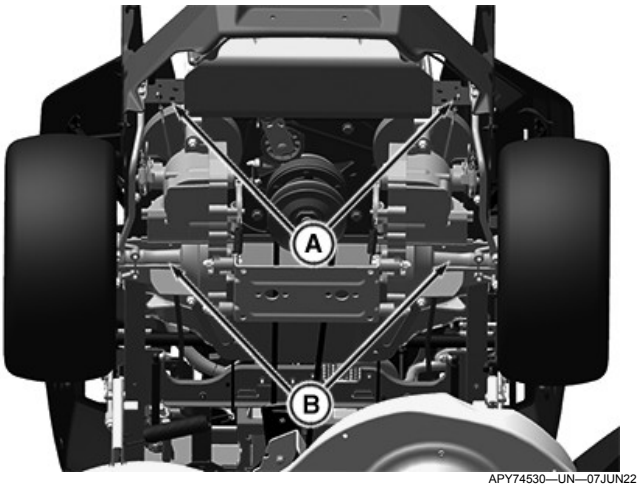

APY74530—UN—07JUN22

2. Safely lift rear of machine frame points (A). Place jackstands or other stable supports onto transaxle locations (B).

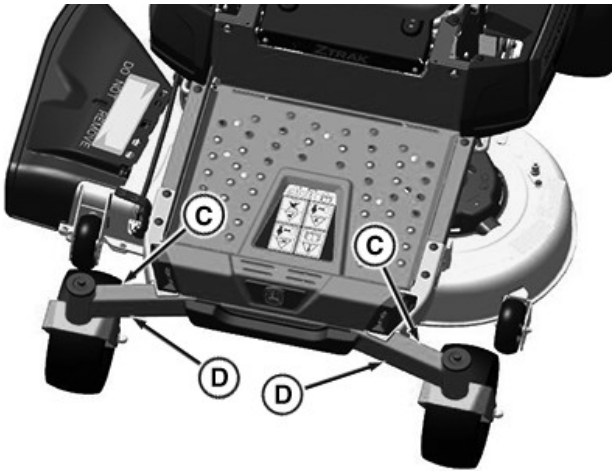

GX536028—UN—25APR22

3. Safely lift front of machine at machine frame points (C). Place jackstands or other stable supports onto machine frame locations (D).
4. If lifting only the front of machine, block rear wheels remaining on ground to avoid movement of machine.
5. To lower the machine, lift front and/or rear of machine, and remove jackstands or supports. Lower the machine.

H9PQBYK,0000062-19-13JUN22

Checking Tire Pressure

CAUTION: Avoid injury! Explosive separation of tire and rim parts is possible when they are serviced incorrectly:

- **Do not attempt to mount a tire without the proper equipment and experience to perform the job.**
- **Make sure that all tires are inflated to the recommended pressure, especially when operating on slopes. Low pressure can cause machine to become unstable on slopes.**
- **Do not weld or heat a wheel and tire assembly. Heat can cause an increase in air pressure resulting in an explosion. Welding can structurally weaken or deform the wheel.**
- **Do not stand in front or over the tire assembly when inflating. Use a clip-on chuck and extension hose long enough to allow you to stand to one side.**

1. Check tires for damage.
2. Check tire pressure with an accurate low-pressure gauge.
3. A lower pressure will improve traction and performance depending on turf conditions or if transport areas have steep inclines.
4. Add or remove air to meet specified tire pressure. (See Specifications section for recommended tire pressures.)

MP47322,00F4677-19-10JUN20

Removing and Installing Wheel Assembly

Removing

1. Park machine safely. (See Parking Safely in the Safety section.)

CAUTION: Avoid injury! The machine can fall or slip from an unsafe lifting device or supports.

- **Use a safe lifting device rated for the load to be lifted.**
- **Lower machine onto jack stands or other stable supports and block wheels before servicing.**

IMPORTANT: Avoid damage! Place jack stands under frame, not under transmission or engine, when raising or supporting machine.

2. Raise machine with a safe lifting device and lower machine onto jack stands or other stable supports. Block wheels remaining on the ground to prevent machine movement.

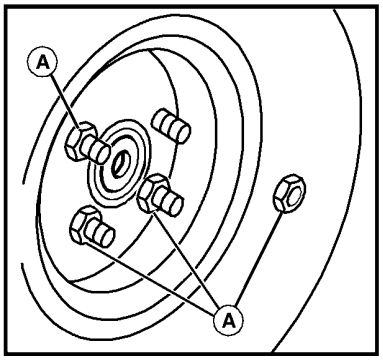

MXAL42875—UN—09APR13

3. Remove the wheel nuts (A).
4. Remove the wheel assembly.

CAUTION: Avoid injury! Explosive separation of tire and rim parts is possible when they are serviced incorrectly:

- **Do not attempt to mount a tire without the proper equipment and experience to perform the job.**

5. Take wheel assembly to an authorized service dealer for repairs.

Installing

1. Install wheel assembly with valve stem to the outside.
2. Tighten wheel nuts evenly in alternating sequence until snug.
3. Lower machine completely to the ground.
4. Tighten wheel nuts to specification.

Specification

Wheel Nuts—Torque. . . . . 102 N·m (75 lb.-ft.)

MP47322,00F4678-19-26MAY15

Removing and Installing Front Caster Wheels

Disassembly:

1. Park machine safely. (See Park Machine Safely in the Safety section.)

CAUTION: Avoid injury! The machine can fall or slip from an unsafe lifting device or supports.

- **Use a safe lifting device rated for the load to be lifted.**
- **Lower machine onto jackstands or other stable supports and block wheels before servicing.**

NOTE: Remove all attachments prior to lifting machine.

2. Jack up front of machine and place on safety stands.

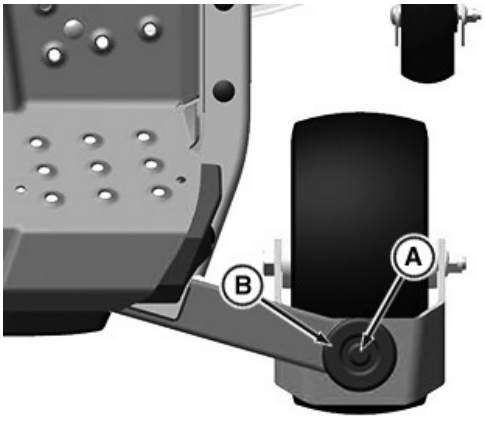

GX536029—UN—25APR22

3. Support caster assembly and remove flange bolt (A) and cap (B).
4. Remove caster from machine.
5. Inspect bearings at top and bottom of frame. Replace worn or damaged bearings.

NOTE: Inner race extends above outer race.

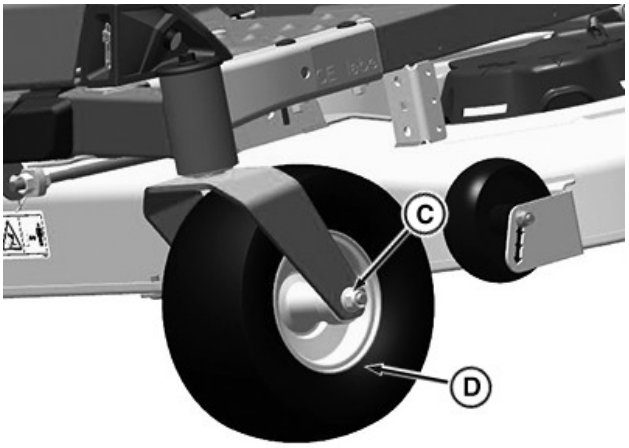

GX536030—UN—25APR22

6. Remove nut (C) and pull bolt out of caster.
7. Remove wheel assembly (D).

MXAL47140—UN—16APR13

8. Remove shield (F) and bearing (G). Inspect shields, wheel, and bearings for wear or damage. Replace worn or damaged parts.

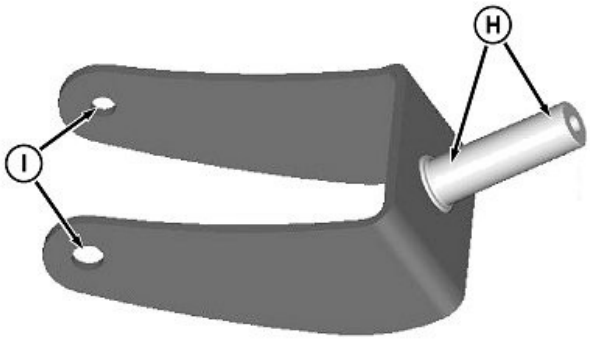

GXT002156—UN—02JUN15

9. Inspect bearing wear areas (H), and bolt holes (I) for wear or damage. Replace if necessary.

Assembly

- Apply grease to caster shaft and bolt.
- Assemble in the reverse order of disassembly.
- Tighten caster locknut and bolt to specification.

Specification

Caster Locknut—Torque. . . . . 47 N·m (35 lb·ft)

- Tighten flange bolt securing yoke to specification.

Specification

Flange Bolt—Torque. . . . . 47 N·m (35 lb·ft)

H9PQBYK,0000063-19-13JUN22

Cleaning and Repairing Metal Surfaces

Cleaning:

Follow automotive practices to care for your vehicle's painted metal surfaces. Use a high-quality automotive wax regularly to maintain the factory look of your vehicle's painted surfaces.

Repairing Minor Scratches (surface scratch):

1. Clean area to be repaired thoroughly.

IMPORTANT: Avoid damage! Do not use rubbing compound on painted surfaces.

2. Use automotive polishing compound to remove surface scratches.
3. Apply wax to entire surface.

Repairing Deep Scratches (bare metal or primer showing):

1. Clean area to be repaired with rubbing alcohol or mineral spirits.
2. Use paint stick with factory-matched colors available from your authorized dealer to fill scratches. Follow directions included on paint stick for use and for drying.
3. Smooth out surface using an automotive polishing compound. Do not use power buffer.
4. Apply wax to surface.

MP47322,00F467A-19-20SEP21

Troubleshooting

Using Troubleshooting Chart

If you are experiencing a problem that is not listed in this chart, see your Technical Manual or authorized dealer for service.

MP47322,00F467B-19-13NOV18

Engine

IF	CHECK
Poor Engine Performance	Dirt in fuel system or fuel is old. Replace fuel with fresh stabilized fuel. Obtain fuel from another supplier before suspecting machine problems. Suppliers blend fuels differently and changing suppliers will generally solve any performance problems Fuel blended with alcohol or ether may contribute to performance problems by causing gum and varnish deposits, especially if fuel is stored for several weeks or more. Obtain fresh fuel.
Engine Will Not Start - No Crank	Park brake not locked. Motion control levers not in outward position. Mower is engaged. Defective brake, mower engagement, or key switch. Electrical problem - See Electrical Troubleshooting Section
Engine Cranks But Will Not Start	Spark plug wire is loose or disconnected. Improper fuel. Plugged fuel filter. Electrical problem - See Electrical Troubleshooting Section
Engine Is Hard To Start	Carburetor is not adjusted properly or dirty. Choke not fully closing. Plugged fuel filter. Faulty spark plug. Stale or improper fuel. Loose or corroded electrical connections. Engine oil viscosity.
Engine Runs Unevenly	Cooling fins plugged. Loose electrical connections. Choke or throttle cable sticking. Choke not fully open. Fuel line or fuel filter plugged. Stale or dirty fuel. Improper fuel. Air cleaner element plugged.
Engine Misses Under Load	Faulty spark plug. Stale or dirty fuel. Plugged fuel filter.
Engine Vapor Locks	Fuel tank vent plugged. Dirt in fuel filter. Cooling fins plugged.

IF	CHECK
	Loose hose connection at fuel filter or fuel pump.
Engine Overheats	Engine air intake screen plugged. Cooling fins plugged. Engine oil low or too high. Engine operated too long at a slow idle speed.
Engine Will Not Idle	Spark plug not gapped correctly. Faulty spark plug. Operator raising off the seat.
Engine Knocks	Stale or low octane fuel. Engine overloaded. Low engine speed. Oil level low.
Engine Stops Or Misses When Operating On Hillsides	Fuel tank less than half full of fuel. Operator raising off of the seat.
Engine Backfires	Faulty spark plug. Operator raising off of the seat.
Engine Loses Power	Engine overheating. Too much oil in engine. Dirty air cleaner. Faulty spark plug. Travel speed is too fast for conditions. Improper fuel.
Excessive Fuel Consumption	Choke is not fully open.
Black Exhaust Smoke	Air filter is dirty or oil soaked.

TH84124,0000246-19-06JUL15

Electrical

IF	CHECK
Starter Does Not Work Or Will Not Turn Engine	Park brake not locked. Mower is engaged. Battery terminals are corroded. Battery not charged. Motion control levers not in Start/Shutdown position. Blown fuse. Defective key switch
Battery Will Not Charge	Dead cell in the battery. Blown charging fuse. Battery cables and terminals are dirty. Low engine speed or excessive idling.
Lights Do Not Work	Light plug disconnected. Loose or burned out bulb. Blown headlight fuse.

MP47322,00F467D-19-15MAR13

Machine

IF	CHECK
Machine Vibrates Too Much Or Rattles Excessively	Attachment drive belts worn or damaged. Mower blades not balanced. Traction drive belt damaged or worn. Dirt on drive sheaves.
Machine Will Not Move With Engine Running	Transmission hydraulic oil level low. Transmission belt broke. Bypass valve levers are engaged.
Front of machine squeaks while driving	Lubricate mower front draft rod at front and rear pivot points.

GH8XT3T,00009D8-19-05MAY22

Mower

IF	CHECK
Discharge Chute Plugged	Travel speed too fast. Grass too long. Grass too wet. Engine rpm not at mow position. Restricted air flow. Belt installed incorrectly. Adjust cutting height to remove only 1/3 of grass at a time.
Patches Of Grass Uncut	Travel speed too fast. Engine rpm not at mow position. Mower deck needs cleaning.
Belt Slipping	Debris in sheaves. Worn belt. Belt tension is incorrect.
Too Much Vibration	Debris on mower deck or in sheaves. Damaged drive belt. Damaged sheaves or sheaves out of alignment. Blades out of balance.
Blades Scalping Grass	Cutting too low. Mower wheels not adjusted correctly. Turning speed too fast. Ridges in terrain. Rough or uneven terrain. Low tire pressure.
Mower Loads Down Tractor	Engine rpm too low. Travel speed too fast. Debris wrapped around mower spindles. Adjust cutting height to remove only 1/3 of grass at a time.
Uneven Cut	Mower deck not leveled properly. Travel speed too fast. Blades dull. Mower wheels not adjusted correctly. Tire pressure unequal. Adjust cutting height to remove only 1/3 of grass at a time.
Excessive Clippings are Expelled from Front of Mower Deck	Conditions may be too dry or terrain too uneven to provide good seal between front of deck and grass. Visit http://JDParts.

IF	CHECK
	deere.com or contact dealer to purchase dry condition kit.

TH84124,00001B2-19-18JUN15

MulchControl (If Equipped)

IF	Check
MulchControl™ gate will not open	Plugging of mower deck/baffles.
MulchControl™ gate will not close	Plugging of mower deck/baffles
MulchControl™ gate not holding setting (open or closed)	Check for handle seated firmly onto pin taper and properly aligned.
MulchControl™ causing blowout in closed position	Check that gate stop is installed (after removal of cut and throw - 42 inch Accel Deep™ only) Ensure that system is in closed position
MulchControl™ Material Dispersion Not Satisfactory	Clean debris buildup from underside of deck Check blades for sharpness and damage Ensure that correct blades are installed (MulchControl™ is designed to use mulch blades, not standard blades) Change blades Check discharge chute for damage Check procedures on Adjusting Mower Level Side-to-Side and Front-to-Rear. Adjust system for proper door position Run engine at fast throttle Mowing too fast for grass conditions

MulchControl is a trademark of Deere & Company
Accel Deep is a trademark of Deere & Company

SB31882,00003DC-19-28MAY20

Storage

Storing Safety

CAUTION: Avoid injury! Fuel vapors are explosive and flammable.

Engine exhaust fumes contain carbon monoxide and cause serious illness or death:

- **Run the engine only long enough to move the machine to or from storage.**
- **If a machine is stored before allowing it to cool, machine fires and structure fires can occur. Fires can occur if debris is not removed from around the engine and muffler, or if stored near combustible materials.**
- **Do not store vehicle with fuel in the tank inside a building where fumes reach an open flame or spark.**
- **Allow the engine to cool before storing the machine in any enclosure.**

MP47322,00F4680-19-06MAY15

Preparing Machine for Storage

1. Repair any worn or damaged parts. Replace parts if necessary. Tighten loose hardware.
2. To prevent rust, repair scratched or chipped metal surfaces.
3. Remove grass and debris from machine.
4. Clean under the rotary deck and remove grass and debris from inside chute and bagger, if applicable.
5. Wash the machine and apply wax to metal and plastic surfaces.
6. To dry belts and pulleys, run machine for five minutes.
7. To prevent rust, apply light coat of engine oil on pivot and wear points.
8. Lubricate grease points and check tire pressure.

MP47322,00F4681-19-13JUL16

Preparing Fuel and Engine For Storage

Fuel:

If you have been using “Stabilized Fuel,” add stabilized fuel to tank until the tank is full.

NOTE: Filling the fuel tank reduces the amount of air in the fuel tank and helps reduce deterioration of fuel.

If you are not using “Stabilized Fuel”:

1. Park machine safely in a well-ventilated area. (See Parking Safely in the Safety section.)

NOTE: Try to anticipate the last time the machine will be used for the season so very little fuel is left in the fuel tank.

2. Turn on engine and allow to run until it runs out of fuel.
3. For machines equipped with key switch, turn key to off position.

IMPORTANT: Avoid damage! Stale fuel can produce varnish and plug carburetor or injector components and affect engine performance.

- **Add fuel conditioner or stabilizer to fresh fuel before filling tank.**

4. Mix fresh fuel and fuel stabilizer in separate container. Follow stabilizer instructions for mixing.
5. Fill fuel tank with stabilized fuel.
6. Run engine for a few minutes to allow fuel mixture to circulate through carburetor on gas engine or fuel injectors on diesel engine.

Engine:

Engine storage procedure should be used when vehicle is not to be used for longer than 60 days.

1. Change engine oil and filter while engine is warm.
2. Service air filter if necessary.
3. Clean debris from engine air intake screen.
4. On gas engines:
   - Remove spark plugs. Put 30 mL (1 oz) of clean engine oil in cylinders.
   - Install spark plugs, but do not connect spark plug wires.
   - Crank the engine 5 or 6 times to allow oil to be distributed.
5. Clean the engine and engine compartment.
6. Remove battery.
7. Clean the battery and battery posts. Check the electrolyte level if your battery is not maintenance free.

8. Close fuel shutoff valve if your machine is equipped.
9. Store the battery in a cool, dry place where it will not freeze.

NOTE: The stored battery should be recharged every 90 days.

10. Charge the battery.

IMPORTANT: Avoid damage! Prolonged exposure to sunlight could damage surfaces. Store machine inside or use a cover if stored outside.

11. Store the vehicle in a dry, protected place. If vehicle is stored outside, put a waterproof cover over it.

OUMX068,000077B-19-05JUL17

Removing Machine From Storage

1. Check tire pressure.
2. Check engine oil level.
3. Check battery electrolyte level if your battery is not maintenance free. Charge battery if necessary.
4. Install battery.
5. On gas engines: check spark plug gap. Install and tighten plugs to specified torque.
6. Lubricate all grease points.
7. Open fuel shut-off valve if your machine is equipped.
8. Run the engine 5 minutes without the mower or any attachments running to allow oil to be distributed throughout engine.
9. Be sure all shields and guards or deflectors are in place.

MP47322,00F4683-19-05JUL17

Specifications

Engine

Z315E Engine

Make	Briggs & Stratton
Engine Model	40EXi
Power Rating Information	http://www.briggsandstratton.com/
Bore	75.4 mm (2.97 in)
Stroke	73.4 mm (2.89 in)
Displacement	656 cm^3 (40.03 in^3)
Cylinders	Twin
Cycle	Four
Valve Clearance - Intake	0.10 - 0.15 mm (0.004 - 0.006 in)
Valve Clearance - Exhaust	0.10 - 0.15 mm (0.004 - 0.006 in)
Spark Plug Gap	0.75 mm (0.030 in)
Spark Plug Torque	20 N·m (180 lb·in)

Z320MEngine

Make	Kawasaki
Engine Model	FR651V
Power Rating Information	http://www.kawasakienginesusa.com/
Bore	78 mm (3.07 in)
Stroke	76 mm (2.99 in)
Displacement	726 cm^3 (44.30 in^3)
Cylinders	Twin
Cycle	Four
Valve Clearance - Intake	0.075 - 0.125 mm (0.002 - 0.005 in)
Valve Clearance - Exhaust	0.075 - 0.125 mm (0.002 - 0.005 in)
Spark Plug Gap	0.75 mm (0.030 in)
Spark Plug Torque	20 N·m (180 lb·in)

Z320R Engine

Make	Kawasaki
Engine Model	FR651V
Power Rating Information	http://www.kawasakienginesusa.com/
Bore	78 mm (3.07 in)
Stroke	76 mm (2.99 in)
Displacement	726 cm^3 (44.30 in^3)
Cylinders	Twin
Cycle	Four
Valve Clearance - Intake	0.075 - 0.125 mm (0.002 - 0.005 in)
Valve Clearance - Exhaust	0.075 - 0.125 mm (0.002 - 0.005 in)
Spark Plug Gap	0.75 mm (0.030 in)
Spark Plug Torque	20 N·m (180 lb·in)

Z325E Engine

Make	Briggs & Stratton
Engine Model	44 EXi
Power Rating Information	http://www.briggsandstratton.com/
Bore	79.25 mm (3.12 in)
Stroke	73.4 mm (2.89 in)
Displacement	724 cm^3 (44.18 in^3)
Cylinders	Twin
Cycle	Four
Valve Clearance - Intake	0.10 - 0.15 mm (0.004 - 0.006 in)
Valve Clearance - Exhaust	0.10 - 0.15 mm (0.004 - 0.006 in)
Spark Plug Gap	0.75 mm (0.030 in)
Spark Plug Torque	20 N·m (180 lb·in)

Z330M Engine

Make	Kawasaki
Engine Model	FR691V
Power Rating Information	http://www.kawasakienginesusa.com/
Bore	78 mm (3.07 in)
Stroke	76 mm (2.99 in)
Displacement	726 cm^3 (44.30 in^3)
Cylinders	Twin
Cycle	Four
Valve Clearance - Intake	0.075 - 0.125 mm (0.002 - 0.005 in)
Valve Clearance - Exhaust	0.075 - 0.125 mm (0.002 - 0.005 in)
Spark Plug Gap	0.75 mm (0.030 in)
Spark Plug Torque	20 N·m (180 lb·in)

Z330R Engine

Make	Kawasaki
Engine Model	FR691V

Power Rating Information	http://www.kawasakienginesusa.com/
Bore	78 mm (3.07 in)
Stroke	76 mm (2.99 in)
Displacement	726 cm^3 (44.30 in^3)
Cylinders	Twin
Cycle	Four
Valve Clearance - Intake	0.075 - 0.125 mm (0.002 - 0.005 in)
Valve Clearance - Exhaust	0.075 - 0.125 mm (0.002 - 0.005 in)
Spark Plug Gap	0.75 mm (0.030 in)
Spark Plug Torque	20 N·m (180 lb·in)

GH8XT3T,00008D4-19-13JUL22

Drivetrain

Transaxle Motors (Z315E, Z320M, Z320R) 42A deck	Hydro-Gear EZT-C
Transaxle Motors (Z325E, Z330M, Z330R) 48A/54A deck	Hydro-Gear EZT-D
Number of Speeds	Hydrostatic, Variable Speed

GH8XT3T,00008D5-19-10MAY22

Travel Speeds at Full Engine RPM

Forward	0-11.3 km/h (0-7.0 mph)
Reverse	0-5.6 km/h (0-3.5 mph)

SB31882,00003D9-19-14APR20

Electrical System

Battery Type	12 Volt
Cold Cranking Capacity	300 Amps

TH84124,00001B5-19-12JUN15

Fuel System

Fuel Types (Recommended):	
	Regular Grade 87 Octane Unleaded Fuel
	Ethanol Blended Fuel (Up to 10%)
	MTBE Reformulated Fuel (Up to 15%)
Fuel Filter	Replaceable - paper element
Fuel Pump	Pulse
Fuel Delivery	Carburetor

GH8XT3T,00009F8-19-11MAY22

Tires

Front	11x6-5
Rear (Z325E, Z330M, Z330R)	20x10-8 (Turf)
Rear (Z315E, Z320M, Z320R)	18x8.5-8 (Turf)
Inflation - Front	103 kPa (15 psi)
Inflation - Rear	69 kPa (10 psi)

GH8XT3T,00008C7-19-14JUL22

Capacities

Crankcase with oil filter (Z315E, Z325E)	1.9 L (2.0 qt)
Crankcase with oil filter (Z320M, Z320R, Z330R)	2.1 L (2.2 qt)
Fuel Tank	13.63 L (3.0 gal)

Towing Capacity (All Models)	113.39 kg (250 lb)
Maximum Tongue Load	45.4 kg (100 lb)

gh8xt3t,1657776738887-19-14JUL22

Dimensions

Z315E with 42A	
Height	1056 mm (36.4 in)
Width	1280 mm (50.4 in)
Length	1915 mm (75.4 in)
Weight with Mower and Full Fuel	252 kg (554.4 lb)
Z320M with 42A	
Height	1100 mm (43.3 in)
Width/Hitch	1280 mm (50.4 in)
Length	1975 mm (77.8 in)
Weight with Mower and Full Fuel	255 kg (561 lb)
Z320R with 42A	
Height	1100 mm (43.3 in)
Width/Hitch	1280 mm (50.4 in)
Length	1836 mm (72.3 in)
Weight with Mower and Full Fuel	260 kg (572 lb)
Z325E with 48A	
Height	1080 mm (42.5 in)
Width	1590 mm (62.6 in)
Length	1915 mm (75.4 in)
Weight With Mower and Full Fuel	270 kg (594 lb)
Z325E with 54A	
Height	1080 mm (42.5 in)
Width	1735 mm (68.5 in)
Length	1915 mm (75.4 in)
Weight with Mower and Full Fuel	275 kg (605 lb)
Z330M with 48A	
Height	1123 mm (44.2 in)
Width	1590 mm (62.6 in)
Length	1975 mm (77.8 in)
Weight with Mower and Full Fuel	272 kg (598 lb)
Z330M with 54A	
Height	1123 mm (44.2 in)
Width	1740 mm (68.5 in)
Length	1975 mm (77.8 in)
Weight with Mower and Full Fuel	265 kg (584 lb)
Z330R with 48A	
Height	1123 mm (44.2 in)
Width	1590 mm (62.6 in)
Length	1975 mm (77.8 in)
Weight with Mower and Full Fuel	278 kg (611 lb)
Z330R with 54A	

Height	1123 mm (44.2 in)
Width	1740 mm (68.5 in)
Length	1975 mm (77.8 in)
Weight with Mower and Full Fuel	283 kg (623 lb)

GH8XT3T,00008D6-19-06MAY22

Recommended Lubricants

Engine Oil	TURF-GARD® OR PLUS-4®
Grease	
	GREASE-GARD™ Premium Plus
	John Deere Multi-Purpose HD Lithium Complex Grease

(Specifications and design subject to change without notice.)

TH84124,000016C-19-03MAR15

Mower Decks

42A Mower	
Cutting Width	1.07 m (42 in)
Blades-Rotary	2
Blade Bolt Torque	68 N•m (50 lb·ft)
Cutting Height (Approximately)	32 - 114 mm (1.25 - 4.5 in)
48A Mower	
Cutting Width	1.22 m (48 in)
Blades-Rotary	3
Blade Nut Torque	68 N•m (50 lb·ft)
Cutting Height (Approximately)	32 - 114 mm (1.25 - 4.5 in)
54A Mower	
Cutting Width	1.37 m (54 in)
Blades-Rotary	3
Blade Nut Torque	68 N•m (50 lb·ft)
Cutting Height (Approximately)	32 - 114 mm (1.25 - 4.5 in)

GH8XT3T,00009E0-19-06MAY22

Warranty

Product Warranty

John Deere offers a standard warranty on new John Deere products. For a copy of the product warranty statement or for details on the warranty terms and conditions for products purchased in the United States and Canada, please contact your local John Deere Dealer or utilize the following resources:

United States

Website:

http://www.deere.com/en_US/services_and_support/warranty/warranty.page

Toll Free: 1-800-537-8233

Dealer Locator:

http://dealerlocator.deere.com/servlet/country=US

Canada

Website (English):

http://www.deere.ca/en_CA/services_and_support/service_plans_warranties/service_plans_warranties.page

Website (French):

http://fr.deere.ca/en_CA/services_and_support/service_plans_warranties/service_plans_warranties.page

Toll Free: 1-800-537-8233

Dealer Locator:

http://dealerlocator.deere.com/servlet/country=CA

Emission-related warranties are included in this Operator's Manual, and applicable if required by law or regulation.

For products purchased in a country other than the United States or Canada, please contact your local John Deere dealer for assistance.

MP47322,00F4690-19-01JUN22

California and U.S. EPA Emissions Control System Warranty Statement (Off-Road Gas Engines)

Your Warranty Rights and Obligations

The California Air Resources Board, John Deere, and the United States Environmental Protection Agency are pleased to explain the emissions control system's warranty on your model year 2023 or 2024 spark ignited off-road engine equipment. In California, new equipment that uses small or large (less than 1 liter) spark ignited off-road engines must be designed, built and equipped to meet the state's stringent anti-smog standards. John Deere must warrant the emissions control system on your spark ignited off-road engine equipment for the period listed below provided there has been no abuse, neglect or improper maintenance of your equipment leading to the failure of the evaporative emissions system.

Your emissions control system may include parts such as: carburetors or fuel-injection system, ignition system, catalytic converters, fuel tanks, valves, filters, clamps, connectors, fuel lines (for liquid fuel and fuel vapors) and other associated components. Also included may be hoses, belts, sensors and other emission-related assemblies.

Where a warrantable condition exists, John Deere will repair your spark ignited off-road engine equipment at no cost to you including diagnosis, parts and labor.

Manufacturer's Warranty Coverage

This emissions control system is warranted for two years for models S100, S110, S120, S130, S140, S150, S160, S170, S180, S220, X330, Z315E, Z325E, Z515E, Z545R, Z735E, Z735M, 1220, and three years for all other models referenced in this operator's manual. If any emissions related part on your equipment is defective, the part will be repaired or replaced by John Deere.

Owner's Warranty Responsibilities

- As the spark ignited off-road engine equipment owner, you are responsible for the performance of the required maintenance listed in your Operator's Manual. John Deere recommends that you retain all receipts covering maintenance on your spark ignited off-road engine equipment, but John Deere cannot deny warranty coverage solely for lack of receipts or for your failure to ensure the performance of all scheduled maintenance.
- As the spark ignited off-road engine equipment owner, you should be aware that John Deere may deny you warranty coverage if your spark ignited off-road engine equipment or a part has failed due to

abuse, neglect, or improper maintenance or unapproved modifications.

- You are responsible for presenting your spark ignited off-road engine equipment to a John Deere Turf and Utility distribution center or service center as soon as a problem exists. The warranty repairs shall be completed in a reasonable amount of time, not to exceed 30 days. If you have a question about your emissions warranty coverage, how to make an emissions warranty claim or how to make arrangements for emissions-related authorized repairs, you should contact your John Deere Turf and Utility retailer, or the John Deere Customer Contact Center at 1-800-537-8233, or email John Deere from https://www.deere.com/en/our-company/contact-us/.

General Emissions Warranty Coverage

The warranty period begins on the date the equipment is delivered to an ultimate purchaser. John Deere warrants to the ultimate purchaser and each subsequent purchaser that the spark ignited off-road engine equipment is:

- Designed, built and equipped so as to conform to all applicable regulations adopted by the California Air Resources Board;
- Designed, built and equipped so as to conform at the time of sale to the ultimate purchaser with applicable U.S. Environmental Protection Agency regulations under 40 CFR Parts 1054 and 1060: and,
- Free from defects in materials and workmanship which cause such engine to fail to conform with applicable regulations for the Emissions Control System Warranty period provided herein.
- For owners located more than 100 miles from a John Deere authorized service center, John Deere will pay either for shipping costs to and from an authorized service center, provide for a service technician to come to the owner to make the warranty repair, or pay for the repair to be made at a local non-authorized service center. These provisions do not apply to Alaska, Hawaii, Arizona, Colorado, Idaho, Montana, Nebraska, Nevada, New Mexico, Oregon, Texas, Utah, and Wyoming.

Emissions Warranty Interpretation

- Any warranted part that is not scheduled for replacement as required by the maintenance instructions in the Operator's Manual is warranted as provided herein. If any such part fails during the period of warranty coverage it will be repaired or replaced by John Deere. Any such part repaired or replaced under warranty is warranted for the remaining warranty period.
- Any warranted part that is scheduled only for regular inspection in the maintenance instructions in the Operator's Manual is warranted as provided herein. A statement in the Operator's Manual to the effect of "repair or replace as necessary" does not reduce the period of warranty coverage. Any such part repaired or replaced under warranty is warranted for the remaining warranty period.
- Any warranted part that is scheduled for replacement as required maintenance in the Operator's Manual is warranted for the period of time prior to the first scheduled replacement point for that part. If the part fails prior to the first scheduled replacement, the part will be repaired or replaced by John Deere. Any such part repaired or replaced under warranty is warranted for the remainder of the period prior to the first scheduled replacement point for the part.
- Repair or replacement of any warranted part under the warranty will be performed at no charge to the owner at any authorized John Deere Turf and Utility retailer.
- The owner will not be charged for diagnostic labor which leads to the determination that a warranted part is defective, provided such work is performed by John Deere or an authorized John Deere service provider.
- John Deere will repair damages to other engine components proximately caused by a failure under warranty of any emissions-related warranted part.
- Add-on or modified parts that are not exempted by the California Air Resources Board may not be used. The use of any non-exempted add-on or modified parts will be grounds for disallowing a warranty claim. John Deere will not be liable to warrant failures of warranted parts caused by the use of a non-exempted add-on or modified part.

Emission Warranty Parts List

Coverage under this warranty includes, but is not limited to, the parts listed below (the emissions control system parts) to the extent these parts were on the engine and equipment purchased.

Fuel Metering System:

- Carburetor and internal parts (or fuel injection system)
- Air/fuel ratio feedback and control system
- Cold start enrichment system

Evaporative System:

- Fuel tank, fuel cap and tether
- Fuel hose, line, fittings, clamps
- Fuel pump, fuel shut-off valve
- Fuel vapor hoses, fittings
- Carbon canister
- Rollover/slant valve for fuel vapor control
- Purge and vent line

Air Induction System:

- Air cleaner
- Intake manifold

Ignition System:

- Spark plugs
- Magneto or electronic ignition system
- Spark advance/retard system
- Gaskets

Exhaust System:

- Exhaust manifold
- Catalyst muffler

Miscellaneous Items Used in Above Systems

- Valves and Switches: vacuum, temperature, position, check, time-sensitive
- Electronic controls
- Hoses, belts, connectors and assemblies

Limited Liability

a) The liability of John Deere under this Emissions Control System Warranty is limited solely to the remedying of defects in materials or workmanship. Except as otherwise expressly provided herein, this warranty does not cover inconvenience or loss of use of the non-road equipment or engine or transportation of the equipment or engine to or from the John Deere Turf and Utility retailer. John Deere shall not be liable for any other expense, loss, or damage, whether direct, incidental, consequential (except as listed above under "coverage") or exemplary arising in connection with the sale or use of or inability to use the non-road equipment or engine for any other purpose.

b) No express emissions control system warranty is given by John Deere with respect to the equipment or engine except as specifically set forth in this document. Any emissions control system warranty implied by law, including any warranty of merchantability or fitness for a particular purpose, is expressly limited to the emissions control system warranty terms set forth in this document.

c) No dealer is authorized to modify this Federal, California and John Deere Emissions Control System Warranty.

MK71445,0000416-19-17MAY22

Tire Warranty

John Deere warranty applies for tires available through the John Deere parts system. For tires not available through the John Deere parts system, the tire manufacturer's warranty applicable to your machine may not apply outside the U.S. (See your John Deere dealer for specific information.)

MX00654,0000314-19-21AUG14

Limited Battery Warranty For Factory Installed Batteries

NOTE: Applicable in North America only. For complete machine warranty, reference a copy of the John Deere warranty statement. Contact your John Deere dealer to obtain a copy.

TO SECURE WARRANTY SERVICE

The purchaser must request warranty service from a John Deere dealer authorized to sell John Deere batteries, and present the battery to the dealer with the top cover plate codes intact.

FREE REPLACEMENT PERIOD

Any new battery which becomes unserviceable (not merely discharged) due to defects in material or workmanship within the FREE REPLACEMENT PERIOD will be replaced free of charge. Installation costs will be covered by warranty if the unserviceable battery was installed by a John Deere factory or dealer and the replacement battery is installed by a John Deere dealer.

PRO RATA ADJUSTMENT (batteries with letter code identification only)

Any new battery which becomes unserviceable (not merely discharged) due to defects in material or workmanship within the Pro Rata Warranty Period will be replaced upon payment of the battery's current list price less a pro rata credit for unused months of service. The applicable adjustment period is determined from the Warranty Code printed at the top of the battery and table below. Installation costs are not covered after the battery warranty period has ended.

THIS WARRANTY DOES NOT COVER

A. Breakage of the container, cover, or terminals.

B. Depreciation or damage caused by lack of reasonable and necessary maintenance or by improper maintenance.

C. Transportation, mailing, or service call charges for warranty service.

D. Batteries that are merely discharged.

LIMITATION OF IMPLIED WARRANTIES AND PURCHASER'S REMEDIES

To the extent permitted by law, neither John Deere nor any company affiliated with it makes any warranties, representations, or promises as to the quality, performance or freedom from defect of the products covered by this warranty. IMPLIED WARRANTIES OF MERCHANTABILITY AND FITNESS FOR A PARTICULAR PURPOSE, TO THE EXTENT APPLICABLE, SHALL BE LIMITED IN DURATION TO THE APPLICABLE ADJUSTMENT PERIOD SET FORTH HERE. THE PURCHASER'S ONLY REMEDIES IN CONNECTION WITH THE BREACH OR PERFORMANCE OF ANY WARRANTY ON JOHN DEERE BATTERIES ARE THOSE SET FORTH HERE. IN NO EVENT WILL THE DEALER, JOHN DEERE OR ANY COMPANY AFFILIATED WITH JOHN DEERE BE LIABLE FOR INCIDENTAL OR CONSEQUENTIAL DAMAGES. (Note: Some states do not allow limitations on how long an implied warranty lasts or the exclusion or limitation of incidental or consequential damages. So these limitations and exclusions may not apply to you.) This warranty gives you specific legal rights, and you may also have some rights which vary from state to state.

NO DEALER WARRANTY

The selling dealer makes no warranty of its own and the dealer has no authority to make any representation or promise on behalf of John Deere, or to modify the terms or limitations of this warranty in any way.

WARRANTY TERMS TABLE

NOTE: If your battery is not labeled with a warranty code, it is a warranty code 6.

Warranty Code	Free Replacement Period	Pro Rata Warranty Period
A	90 Days	40 Months
B	90 Days	36 Months
C	90 Days	24 Months
D	12 Months	48 Months
E	90 Days	12 Months
F	90 Days	60 Months
G	12 Months	60 Months
H	12 Months	60 Months
6	6 Months	0 Months
12	12 Months	0 Months
18	18 Months	0 Months

OUMX068,0000504-19-10MAY17

John Deere Quality Statement

John Deere Quality

John Deere equipment is more than just a purchase, it's an investment in quality. That quality goes beyond our equipment to your John Deere dealer's parts and service support. This support is needed to keep you a satisfied customer.

That's why John Deere has initiated a process to handle your questions or problems, should they arise. The following three steps will help guide you through the process.

Step 1

Refer to your operator's manual

A. It has many illustrations and detailed information on the safe and proper operation of your equipment.

B. It gives troubleshooting procedures, and specification information.

C. It gives ordering information for parts catalogs, service and technical manuals.

D. If your questions are not answered in the operator's manual, then go to Step 2.

Step 2

Contact your dealer

A. Your John Deere dealer has the responsibility, authority, and ability to answer questions, resolve problems, and fulfill your parts and service needs.

B. First, discuss your questions or problems with your dealer's trained parts and service staff.

C. If the parts and service people are unable to resolve your problem, see the dealership manager or owner.

D. If your questions or problems are not resolved by the dealer, then go to Step 3.

Step 3

Contact John Deere

A. Your John Deere dealer is the most efficient source in addressing any concern, but if you are not able to resolve your problem after checking your operator's manual and contacting your dealer, contact John Deere for assistance.

B. For prompt, effective service, please have the following ready before you call:

- The name of the dealer with whom you've been working.
- Your equipment model number.
- Number of hours on machine (if applicable).
- Your serial number which you recorded on the inside front cover of this manual.
- If the problem is with an attachment, your attachment identification number.

C. Then call 1-800-537-8233 (United States and Canada) and our advisor will work with your dealer to investigate your concern. If you are outside the United States and Canada, visit the following website:

https://www.deere.com/en/global-country-selector/

Select your country and then click on the Contact Us link at the bottom of the page.

SP66632,00043A7-19-17MAY22

Service Record

Record Service Dates

Oil Change	Oil Filter Change (If Equipped)	Lubricate Machine	Air Cleaner Element Check/Clean	Fuel Filter Change

OUO1082,00066CA-19-15MAY17

Slope Gauge

Slope Gauge Template

Hold up or copy this page and follow the directions below to use the Slope Gauge Template.

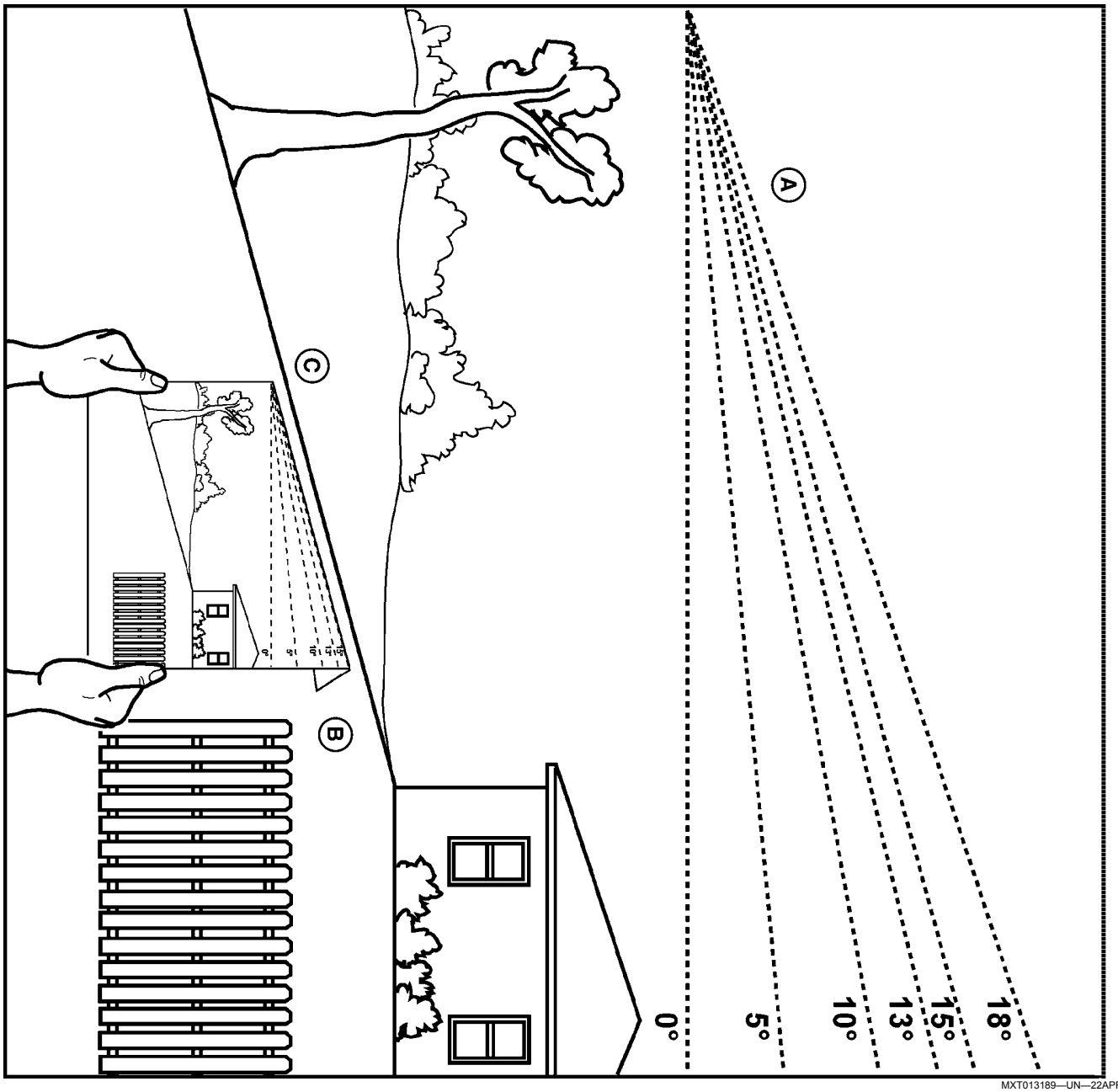

MXT013189—UN—22APR15

Use this slope gauge to determine if a slope is too steep for safe operation. Do not operate your machine on a slope greater than what is recommended in your operator's manual. See Operating on Slopes in the Safety section.

- Fold along the appropriate line (A) to match the recommended slope.
- Align this edge (B) with a vertical surface, a tree, building, fence pole, etc.
- Compare slope (C) with folded edge.

OUMX068,0000513-19-05JUL17

Index

A

Adjustment, Altitude 26
Air Cleaner Element
  Checking and Cleaning 30
Air Cleaner Elements (Twin Cylinder), Checking and Cleaning .. 29

B

Battery and Terminals, Cleaning 45
Battery, Removing and Installing 45
Battery, Service Safely 45
Battery, Using Booster 45
Blades, Checking Mower 44
Blades, Servicing Mower 44

D

Deflectors
  Installing, 48 in. Accel Deep™ deck 42

E

Electrical Troubleshooting 50
Engine
  Oil 27
Engine Fins, Cleaning 28
Engine Shroud, Cleaning 28
Engine Troubleshooting 49

F

Filter, Changing Engine Oil 27
Filter, Replacing Fuel 31
Foot Plate, Removing and Installing Mower Deck 35
Four-cycle Engine, gasoline fuel 46
Fuel Storage 51
Fuel Tank, Filling 46
Fuse, Replacing 46

G

Gasoline fuel, four-cycle engine 46
Grease 25
Guard, Cleaning Engine Screen 32

H

Handle
  Installing, 48 in. Accel Deep™ deck 42
Hour Meter, Using 19

I

Identification Numbers, Record 3

L

Labels, Locating Safety 4
Labels, safety with text 5
Labels, safety without text 8
Levers, Using the Motion Control 19
Lifting Machine 47

M

Machine Troubleshooting 50
Machine, Mounting and Dismounting 15
Material Collection System, Unplugging 23
Metal Surfaces, Repairing and Cleaning 49
Motion Control Levers, Adjusting 15
Moving Machine by Hand 22
Mower Deck Identification 35
Mower Deck Spindles, Lubricating 25
Mower Deck, Cleaning 23
Mower Drive Belt
  Replacing (42A) 40
  Replacing (48A, 54A) 41
Mower Troubleshooting 50
Mower, Adjusting Cutting Height 15
Mower, Adjusting Level 16
Mower, Engaging 22
Mower, Installing Deck (42A) 38
Mower, Installing Deck (48A and 54A) 39
Mower, Removing Deck (42A) 35
Mower, Removing Deck (48A and 54A) 36
Mowing tips 24
Mowing Tips 24
Mulch blades
  Installing, 48 in. Accel Deep™ deck 44
Mulch gate stop plate
  Installing, 48 in. Accel Deep™ deck 41
MulchControl Troubleshooting 51

N

Neutral Creep, Checking and Adjusting 33

O

Oil
  Engine
    Gasoline 27
Oil Level, Checking Engine 27
Open and closed modes, switching 22
Operating Checklist, Daily 14
Operator's Station Controls 14

P

Park Brake, Testing 18
Park Brake, Using 18
Plastic And Painted Surfaces, Avoid Damage To 14

R

Record service dates 58
Removing and storing
  MulchControl, 48 in. Accel Deep™ deck 43
Replacement parts 2

S

Safety labels, with text 5
Safety labels, without text 8
Safety Systems, Testing 17
Seat, Adjusting 15
Service Information, Emissions 26
Service Intervals 25
Slopes, operating on
  Terrain hazards, operating near 10
Spark Arrestor, Maintenance 32
Spark Plug, Checking 31
Specifications
  Capacities 53
  Dimensions 53
  Drivetrain 53
  Electrical System 53
  Engine 52
  Mower Decks 54
  Recommended Lubricants 54

Tires 53
Storage, Preparing Machine for 51
Storage, Removing Machine from 52
Storing Safety 51
Switch, Testing Mower Engagement (PTO) 18
Switch, Testing Park Brake 18
Switch, Testing Seat 18
Switch, Using Key 19
Switch, Using the Mower Engagement 19

T

Template, slope gauge 59
Tire Pressure, Checking 47
Tracking, Adjusting 33
Transaxle Drive Belt, Checking and Replacing 34
Transaxle, Cleaning Cooling Fans 34
Transmission, Checking (See your John Deere dealer) 33
Transporting Machine on Trailer 23
Transporting Material Collection System 24
Troubleshooting chart 49

U

Unplugging Mower 22

W

Warranty Registration 3
Warranty, product 54
Wheel Assembly, Removing and Installing 47
Wheels, Adjusting Mower 17
Wheels, Removing and Installing Front Caster 48

Notes

Notes

Notes