JOHN DEERE
WORLDWIDE COMMERCIAL & CONSUMER EQUIPMENT DIVISION

John Deere
EZtrak

OMM162468 J9

OPERATOR'S MANUAL

JOHN DEERE

jdservicemanual.com

https://jdservicemanual.com

North American Version
Litho in U.S.A.

WARNING: The Engine Exhaust from this product contains chemicals known to the State of California to cause cancer, birth defects or other reproductive harm.

California Proposition 65 Warning

Table of Contents

Introduction 1
Product Identification 2
Safety Labels 3
Safety 6
Assembly 9
Operating - Controls 12
Operating 13
Service Intervals 24
Service Lubrication 25
Service Engine 26
Service Transmission 34
Service Mower 38
Service Electrical 48
Service Miscellaneous 50
Troubleshooting 53
Storage 55
Specifications 56
Warranty 58
Index 59
Getting Quality Service 61
Service Record 64

Original Instruction
All information, illustrations and specifications in this manual are based on the latest information at the time of publication. The right is reserved to make changes at any time without notice.
COPYRIGHT© 2009
Deere & Co.
John Deere Worldwide Commercial and Consumer Equipment Division
All rights reserved
Previous Editions
COPYRIGHT©

Introduction

Thank You for Purchasing a John Deere Product

We appreciate having you as a customer and wish you many years of safe and satisfied use of your machine.

Using Your Operator's Manual

This manual is an important part of your machine and should remain with the machine when you sell it.

Reading your operator's manual will help you and others avoid personal injury or damage to the machine. Information given in this manual will provide the operator with the safest and most effective use of the machine. Knowing how to operate this machine safely and correctly will allow you to train others who may operate this machine.

This manual and safety signs on your machine may also be available in other languages (see your authorized dealer to order).

Sections in your operator's manual are placed in a specific order to help you understand all the safety messages and learn the controls so you can operate this machine safely. You can also use this manual to answer any specific operating or servicing questions.

The machine shown in this manual may differ slightly from your machine, but will be similar enough to help you understand our instructions.

RIGHT-HAND and LEFT-HAND sides are determined by facing in the direction the machine will travel when going forward. When you see a broken line (------), the item referred to is hidden from view.

Before delivering this machine, your dealer performed a predelivery inspection to ensure best performance.

Special Messages

Your manual contains special messages to bring attention to potential safety concerns, machine damage as well as helpful operating and servicing information. Please read all the information carefully to avoid injury and machine damage.

CAUTION: Avoid injury! This symbol and text highlight potential hazards or death to the operator or bystanders that may occur if the hazards or procedures are ignored.

IMPORTANT: Avoid damage! This text is used to tell the operator of actions or conditions that might result in damage to the machine.

NOTE: General information is given throughout the manual that may help the operator in the operation or service of the machine.

Product Identification

Record Identification Numbers

Zero Turn Mowers

PIN (080001-)

Z425 (California) PIN (061000-)

If you need to contact an Authorized Service Center for information on servicing, always provide the product model and identification numbers.

You will need to locate the model and serial number for the machine, engine and transmission/transaxle of your machine and record the information in the spaces provided below.

DATE OF PURCHASE:

_____

DEALER NAME:

_____

DEALER PHONE:

_____

Product Identification Number:

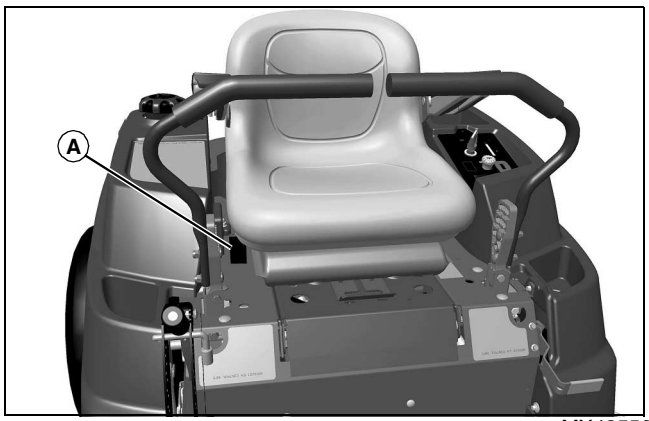

MX43552

Product Identification Number (A):

— — — — — — — — — — — — — — — — — —

Engine Serial Number:

Z225 - On engine blower cover over starter.

Z245, Z425 - On engine housing next to oil filter.

Z445, Z465 - On engine blower cover over oil filter.

— — — — — — — — — — — — — — — — — —

Transmission / Transaxle Serial Number:

Z200 models - SN tags at rear of transaxles.

Z400 models - SN tag on top of transmission/pump (lift seat to access).

— — — — — — — — — — — — — — — — — —

Register Your Product and Warranty Online

To register your product through the Internet, simply go to www.JohnDeereWarrantyRegistration.com. Completing the information, either online or with the product warranty card, will ensure the customer that their product receives all post sales service and important product information.

Safety Labels

Safety Label Location

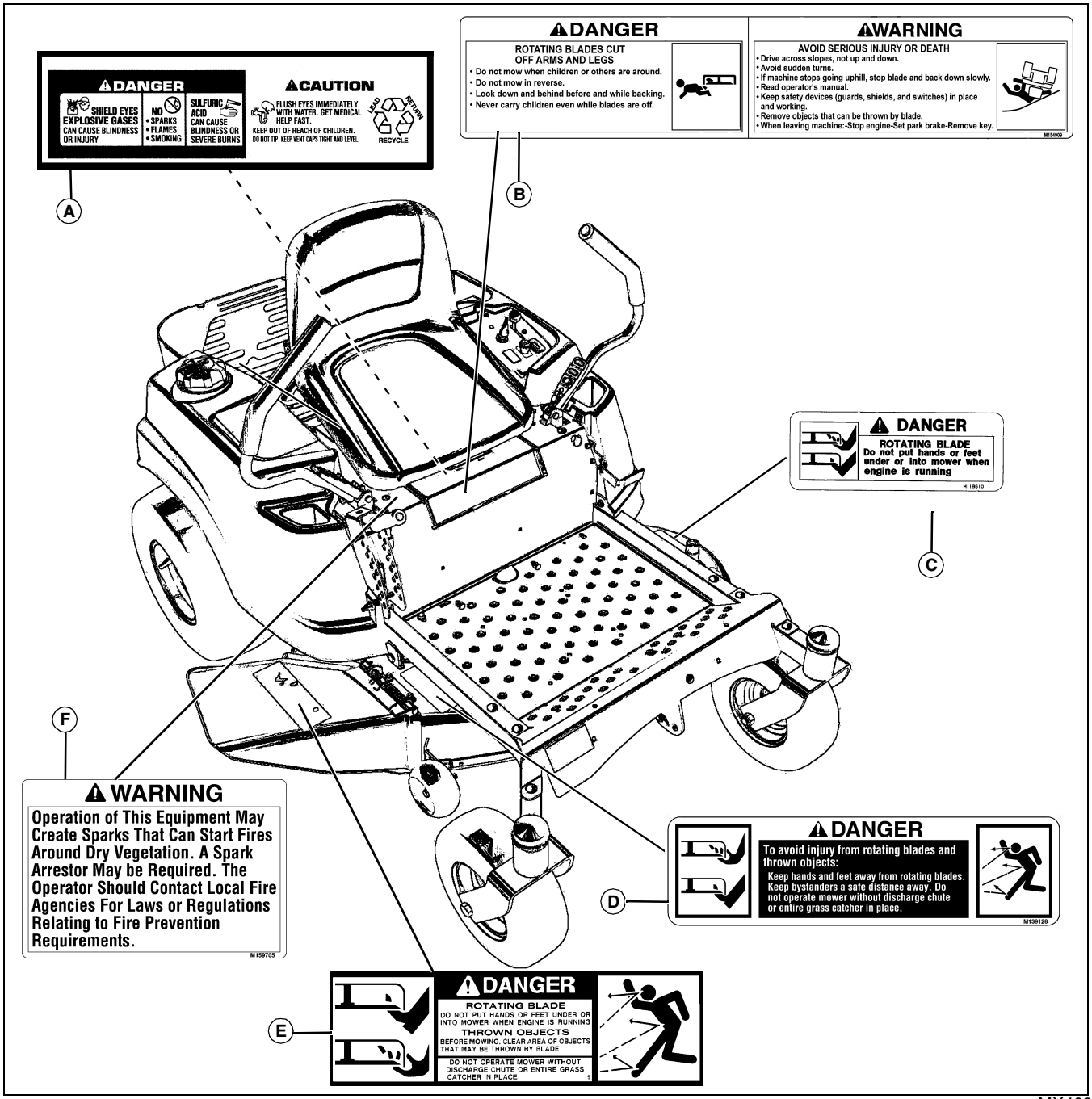

MX40980

Picture Note: Z225 model shown.

A- DANGER-CAUTION M128699

B- WARNING/DANGER M154909

C- DANGER M118610

D- DANGER M139128

E- DANGER M89504

F- WARNING M159705

Understanding The Machine Safety Labels

The machine safety labels shown in this section are placed in important areas on your machine to draw attention to potential safety hazards.

On your machine safety labels, the words DANGER, WARNING, and CAUTION are used with this safety-alert symbol. DANGER identifies the most serious hazards.

The operator's manual also explains any potential safety hazards whenever necessary in special safety messages that are identified with

the word, CAUTION, and the safety-alert symbol.

There can be additional safety information contained on parts and components sourced from suppliers that is not reproduced in this operator's manual.

WARNING

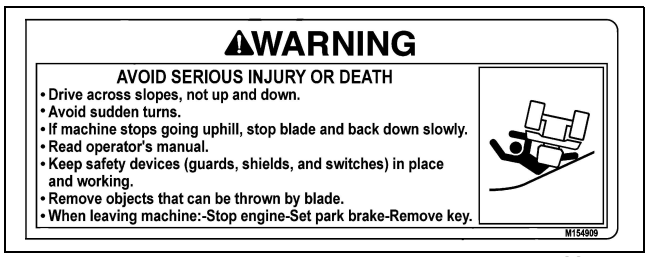

M154909

AVOID SERIOUS INJURY OR DEATH

• Drive across slopes, not up and down.

• Avoid sudden turns.

• If machine stops going uphill, stop blade and back down slowly.

• Read operator's manual.

• Keep safety devices (guards, shields, and switches) in place and working.

• Remove objects that can be thrown by blade.

• When leaving machine: -Stop engine, -Lock park brake, -Remove key.

DANGER

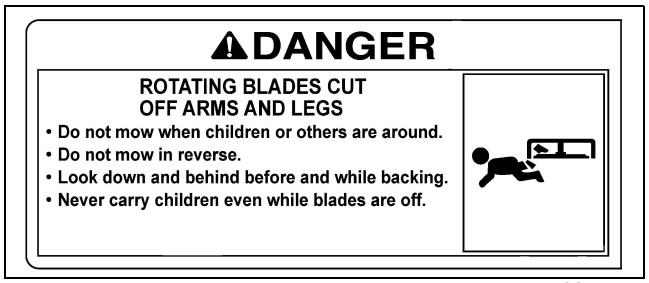

M154909

ROTATING BLADES CUT OFF ARMS AND LEGS

• Do not mow when children or others are around.

• Do not mow in reverse.

• Look down and behind before and while backing.

• Never carry children even while blades are off.

DANGER - M89504

M89504

ROTATING BLADE

• Do not put hands or feet under or into mower when engine is running.

THROWN OBJECTS

• Before mowing, clear area of objects that may be thrown by blade.

• Do not operate mower without discharge chute or entire grass catcher in place.

DANGER M128699

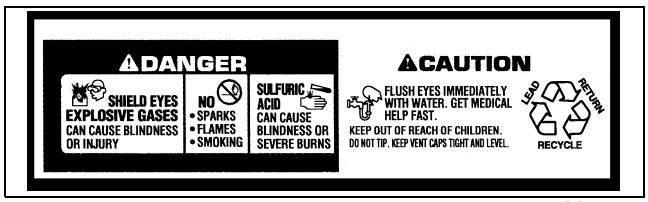

M128699

Picture Note: Located on battery

• Shield eyes, explosive gases can cause blindness or injury.

• No sparks, flames, smoking.

• Sulfuric acid can cause blindness or severe burns.

• Flush eyes immediately with water. Get medical help fast.

• Keep out of reach of children.

• Do not tip.

• Keep vent caps tight and level.

DANGER

To avoid injury from rotating blades and thrown objects:

M139128

• Keep hands and feet away from rotating blades. Keep bystanders a safe distance away. Do not operate mower without discharge chute or entire grass catcher in place.

DANGER - M131748

M131748

To avoid injury from rotating blades and thrown objects, stay clear of deck edge and keep others away.

Do not mow without discharge chute or entire grass catcher in place.

DANGER

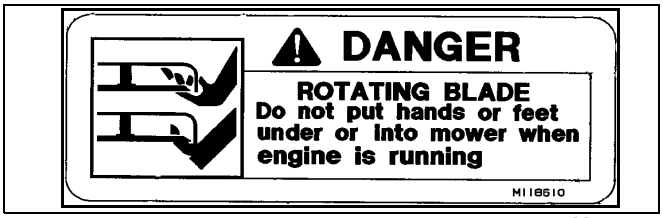

M118610

ROTATING BLADE

- Do not put hands or feet under or into mower when engine is running.

Warning M159705

M159705

Picture Note: This label is required and installed on machines sold in California. This label may also be installed on machines sold in other locations.

Operation of This Equipment May Create Sparks that Can Start Fires Around Dry Vegetation. A Spark Arrestor May be Required. The Operator Should Contact Local Fire Agencies For Laws or Regulations Relating to Fire Prevention Requirements.

Emission Control System Certification Label

NOTE: Tampering with emission controls and components by unauthorized personnel may result in severe fines or penalties. Emission controls and components can only be adjusted by EPA and/or CARB authorized service centers. Contact your John Deere Commercial and Consumer Equipment Retailer concerning emission controls and component questions.

The presence of an emissions label signifies that the engine has been certified with the United States Environmental Protection Agency (EPA) and/or California Air Resources Board (CARB).

The emissions warranty applies only to those engines marketed by John Deere that have been certified by the EPA and/or CARB; and used in the United States and Canada in off-road mobile equipment.

Emission Compliance Period

If your engine has the emission compliance category listed on the emission control system certification or air index label, this indicates the number of operating hours for which the engine has been certified to meet EPA and/or CARB emission requirements. The following table provides the engine compliance period in hours associated with the category found on the certification label.

Agency	Category	Hours
EPA	C	250
EPA	B	500
EPA	A	1000
CARB	Moderate	125
CARB	Intermediate	250
CARB	Extended	500

Safety

Operating Safely

This cutting machine is capable of amputating hands and feet and throwing objects. Failure to observe the following safety instructions could result in serious injury or death.

• Read, understand and follow all instructions on the machine and in manuals provided, and view safety video, before starting. Be thoroughly familiar with the controls and the proper use of the machine before starting.

• The residential zero radius lawn mower drives differently than a traditional riding mower. Learning to operate the controls smoothly and safely will take some time.

• Practice operating the residential zero radius lawn mower in a large open area with the blades off. Keep practicing until you feel confident in your maneuvering and driving skills.

• Only allow responsible adults, who have practiced driving the residential zero radius lawn mower and are familiar with the instructions to operate the machine. Local restrictions may restrict the age of the operator.

• Do not put hands or feet near rotating parts or under the machine. Keep clear of the discharge opening at all times.

• Clear the area of objects such as rocks, wire and toys which could be thrown by the blades.

• Be sure the area is clear of bystanders before operating. Stop machine if anyone enters the area.

• Never carry passengers.

• Do not mow in reverse unless absolutely necessary. Always look down and behind before and while backing.

• Never direct discharged material toward anyone. Avoid discharging material against a wall or obstruction. Material may ricochet back toward the operator. Stop the blades when crossing gravel surfaces.

• Do not operate the machine without the entire grasscatcher, discharge guard, or other safety devices in place and working. Never operate with the discharge deflector raised, removed, or altered, unless using a grasscatcher.

• Slow down before turning.

• Never leave a running machine unattended. Always turn off blades, lock park brake, stop engine and remove key before dismounting.

• Disengage blades when not mowing. Shut off engine and wait for all parts to come to a complete stop before cleaning the machine, removing the grasscatcher, or unclogging the discharge chute.

• Operate machine only in daylight or good artificial light.

• Do not operate the machine while under the influence of alcohol or drugs.

• Watch for traffic when operating near or crossing roadways. Stop blades before crossing roads or sidewalks.

• Use extra care when loading or unloading the machine into a trailer or truck.

• Always wear safety goggles or safety glasses with side shields when operating machine.

• Data indicates operators 60 years and above are involved in a large percentage of riding mower-related injuries. These operators should evaluate their ability to operate the riding mower safely enough to protect themselves and others from serious injury.

• Follow the manufacturer's recommendation for wheel weights or counterweights.

• Inspect machine before you operate. Be sure hardware is tight. Repair or replace damaged, badly worn, or missing parts. Be sure guards and shields are in good condition and fastened in place. Make any necessary adjustments before you operate.

• Before using, always visually inspect to see that the blades, blade bolts and the mower assembly are not worn and damaged. Replace worn and damaged blades and bolts in sets to preserve balance.

• Make sure spark plug, muffler, fuel cap and air cleaner are in place before starting the engine.

• Be sure all drives are in neutral and parking brake is locked before starting engine. Only start engine from the operator's position.

• Do not change the engine governor settings or overspeed the engine. Operating the engine at excessive speed can increase the hazard of personal injury.

• If you hit an object or if abnormal vibration occurs, stop the machine and inspect it. Make repairs before you operate.

• Use only accessories and attachments approved by the manufacturer of the machine. Keep safety labels visible when installing accessories and attachments.

• Do not wear radio or music headphones. Safe service and operation requires your full attention.

• When machine is left unattended, stored, or parked, lower the mower deck unless a positive mechanical lock is used.

Using a Spark Arrestor

The engine in this machine is not equipped with a spark arrestor muffler. The California Public Resources Code, section 4442.5 provides as follows:

No person shall sell, offer for sale, lease, or rent to any person any internal combustion engine subject to Section 4442 or 4443, and not subject to Section 13005 of the Health and Safety Code, unless the person provides a written notice to the purchaser or bailee, at the time of sale or at the time of entering into the lease or rental contract, stating that it is a violation of Section 4442 or 4443 to use or operate the engine on any forest-covered, brush-covered, or grass-covered land unless the engine is equipped with a spark arrestor, as defined in Section 4442, maintained in effective working order or the engine is constructed, equipped, and maintained for the prevention of fire pursuant to Section 4443. Cal. Pub. Res. Code 4442.5.

Other states or jurisdictions may have similar laws. A spark arrestor for your machine may be available from your authorized dealer. An installed spark arrestor must be maintained in good working order by the operator.

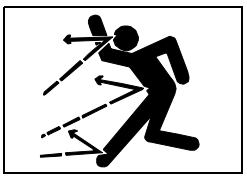

Checking Mowing Area

• Clear mowing area of objects that might be thrown. Keep people and pets out of mowing area.

• Low-hanging branches and similar obstacles can injure the operator or interfere with mowing operation. Before mowing, identify potential obstacles such as low-hanging branches, and trim or remove those obstacles.

• Study mowing area. Set up a safe mowing pattern. Do not mow where traction or stability is doubtful.

• Test drive area with mower lowered but not running. Slow down when you travel over rough ground.

Parking Safely

1. Stop machine on a level surface, not on a slope.

jdservicemanual.com

2. Disengage mower blades.

3. Move motion control levers out to the Start/Shutdown position.

4. Lock the park brake.

5. Stop the engine.

6. Remove the key.

7. Wait for engine and all moving parts to stop before you leave the operator's seat.

8. Disconnect the negative battery cable or remove the spark plug wire (for gasoline engines) before servicing the machine.

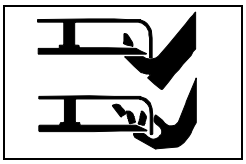

Rotating Blades are Dangerous

HELP PREVENT SERIOUS OR FATAL ACCIDENTS:

• Rotating blades can cut off arms and legs, and throw objects. Failure to observe safety instructions could result in serious injury or death.

• Keep hands, feet and clothing away from mower deck when engine is running.

• Be alert at all times, drive forward and in reverse carefully. People, especially children can move quickly into the mowing area before you know it.

• Before backing up, stop mower blades or attachments and look down and behind the machine carefully, especially for children.

• Do not mow in reverse.

• Shut off blades when you are not mowing.

• Park machine safely before leaving the operator's station for any reason including emptying the grasscatchers or unplugging the chute.

• The mower blades should stop in approximately five seconds when the mower is disengaged. If you believe that your blades may not be stopping in that period of time, take your machine to your authorized dealer where they can safely check and service your machine.

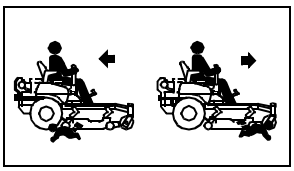

Protect Children

• Death or serious injury can occur when young children associate having fun with a lawn mowing machine simply because someone has given them a ride on a machine.

• Children are attracted to lawn mowing machines and mowing activities. They don't understand the dangers of rotating blades or the fact that the operator is unaware of their presence.

• Children who have been given rides in the past may suddenly appear in the mowing area for another ride and be run over or backed over by the machine.

• Tragic accidents with children can occur if the operator is not alert to the presence of children, especially when a child approaches a machine from behind. Before and while backing up, stop mower blades and look down and behind the machine carefully, especially for children.

• Never carry children on a machine or attachment, even with the blades off. Do not tow children in a cart or trailer. They can fall off and be seriously injured or interfere with safe machine operation.

• Never use the machine as a recreational vehicle or to entertain children.

• Never allow children or an untrained person operate the machine. Instruct all operators not to give children a ride on the machine or in an attachment.

• Keep children indoors, out of the mowing area, and in the watchful eye of a responsible adult, other than the operator, when a mower is being operated.

• Stay alert to the presence of children. Never assume that children will remain where you last saw them. Turn the machine off if a child enters the work area.

• Use extreme care when approaching blind corners, shrubs, trees, or other objects that may block your view of a child.

Avoid Tipping

• Slopes are a major factor related to loss-of-control and tip-over accidents, which can result in severe injury or death. Operation on all slopes requires extra caution.

• Mow across slopes, not up and down.

• Never mow on any slope that is more than 10 degrees, or a slope that rises more than 3-1/2 feet within a distance of 20 feet of distance.

• Make a safe choice when operating on slopes. If you feel uncomfortable on a hillside, or if you feel the front of the machine start to creep down the slope, stop mowing immediately and proceed slowly and safely down the slope.

• If steering direction cannot be maintained with slight steering corrections, the slope is too steep to mow.

• Watch for holes, ruts, bumps, rocks, or other hidden objects. Uneven terrain could overturn the machine. Tall grass can hide obstacles.

• Choose a low ground speed so you will not have to stop or shift while on a slope.

• Do not mow or operate machine on wet grass. Tires may lose traction. Tires may lose traction on slopes even though the brakes are functioning properly.

• Avoid starting, stopping or turning on a slope. If the tires lose traction, disengage the blades and proceed slowly, straight down the slope.

• Keep all movement on slopes slow and gradual. Do not make sudden changes in speed or direction, which could cause the machine to roll over.

• Use extra care while operating machine with grasscatchers or other attachments, they can affect stability of the machine. Do not use on steep slopes.

• Do not mow near drop-offs, ditches, embankments, or bodies of water. The machine could suddenly roll over if a wheel goes over the edge or the edge caves in.

• Leave at least the width of the machine as a safety area between the machine and any safety hazard. Mow those areas with a hand-held trimmer or walk-behind mower.

• Follow the manufacturer's recommendations for wheel weights or counterweights for added stability when operating on slopes or using front or rear mounted attachments. Remove weights when not required.

• Drive machine slowly and avoid quick stops if attachment has been removed for servicing mower or machine.

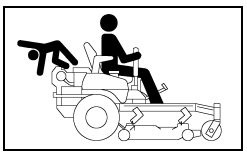

Keep Riders Off

• Only allow the operator on the machine. Keep riders off.

• Riders on the machine or attachment may be struck by foreign objects or thrown off the machine causing serious injury.

• Riders obstruct the operator's view resulting in the machine being operated in an unsafe manner.

idservicemanual.com

Towing Loads Safely

• Stopping distance increases with speed and weight of towed load. Travel slowly and allow extra time and distance to stop.

• Total towed weight must not exceed combined weight of pulling machine, ballast and operator. Use counterweights or wheel weights as described in the attachment or pulling machine operator's manual.

• Excessive towed load can cause loss of traction and loss of control on slopes. Reduce towed weight when operating on slopes.

• Never allow children or others in or on towed equipment.

• Use only approved hitches. Tow only with a machine that has a hitch designed for towing. Do not attach towed equipment except at the approved hitch point.

• Follow the manufacturer's recommendations for weight limits for towed equipment and towing on slopes.

• If you cannot back up a slope with a towed load, the slope is too steep to operate on with the towed load. Reduce the towed load or do not operate.

• Do not turn sharply. Use additional caution when turning or operating under adverse surface conditions. Use care when reversing.

• Do not shift to neutral and coast downhill.

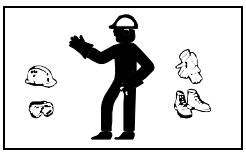

Wear Appropriate Clothing

• Always wear eye protection when operating the machine.

• Wear close fitting clothing and safety equipment appropriate for the job.

• While operating this machine, always wear substantial footwear and long trousers. Do not operate the equipment when barefoot or wearing open sandals.

• Wear a suitable protective device such as earplugs. Loud noise can cause impairment or loss of hearing.

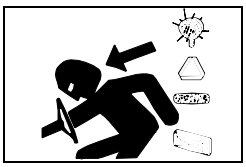

Driving Safely on Public Roads

Avoid personal injury or death resulting from a collision with another vehicle on public roads:

• Use safety lights and devices. Slow moving machines when driven on public roads are hard to see, especially at night.

• Whenever driving on public roads, use flashing warning lights and turn signals according to local regulations. Extra flashing warning lights may need to be installed.

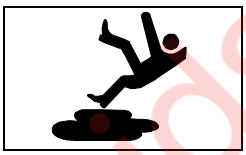

Practice Safe Maintenance

• Only qualified, trained adults should service this machine. Understand service procedure before doing work.

• Never operate machine in a closed area where dangerous carbon monoxide fumes can collect.

• Keep all nuts and bolts tight, especially blade attachment bolts, to be sure the equipment is in safe working condition.

• Never tamper with safety devices. Check their proper operation regularly.

• Keep machine free of grass, leaves or other debris build-up. Clean up oil or fuel spillage and remove any fuel-soaked debris. Allow the machine to cool before storing.

• If you strike a foreign object, stop and inspect the machine. Repair, if necessary, before restarting.

• Never make any adjustments or repairs with the engine running. Wait for all movement to stop on machine before adjusting, cleaning or repairing.

• Check grasscatcher components and the discharge guard frequently and replace with manufacturer's recommended parts, when necessary. Grasscatcher components are subject to wear, damage, and deterioration which could expose moving parts or allow objects to be thrown.

• Mower blades are sharp. Wrap the blade or wear gloves, and use extra care when servicing them. Only replace blades. Never straighten or weld them.

• Check brake operation frequently. Adjust and service as required.

• Maintain or replace safety and instruction labels, as necessary.

• On multi-bladed machines, take care as rotating one blade can cause other blades to rotate.

• Keep hands, feet, clothing, jewelry, and long hair away from any moving parts, to prevent them from getting caught.

• Lower any attachments to the ground before cleaning or servicing machine. Disengage all power and stop the engine. Lock park brake and remove the key. Let machine cool.

• Securely support any machine elements that must be raised for service work. Use jack stands or lock service latches to support components when needed.

• Disconnect battery or remove spark plug wire (for gasoline engines) before making any repairs. Disconnect negative terminal first and positive last. Install positive terminal first and negative last.

• Before servicing machine or attachment, carefully release pressure from any components with stored energy, such as hydraulic components or springs.

• Keep all parts in good condition and properly installed. Fix damage immediately. Replace worn or broken parts.

• Charge batteries in an open, well-ventilated area, away from sparks. Unplug battery charger before connecting or disconnecting from the battery. Wear protective clothing and use insulated tools.

• Do not strike the flywheel with a hammer or hard object because the flywheel may later shatter during operation.

• If equipped with hydraulic lift - release hydraulic pressure by lowering attachment or cutting units to the ground or to a mechanical stop and move hydraulic control levers back and forth.

Avoid High Pressure Fluids

• Hydraulic hoses and lines can fail due to physical damage, kinks, age, and exposure. Check hoses and lines regularly. Replace damaged hoses and lines.

• Hydraulic fluid connections can loosen due to physical damage and vibration. Check connections regularly. Tighten loose connections.

• Escaping fluid under pressure can penetrate the skin causing serious injury. Avoid the hazard by relieving pressure before disconnecting hydraulic or other lines. Tighten all connections before applying pressure.

• Search for leaks with a piece of cardboard. Protect hands and body from high pressure fluids.

• If an accident occurs, see a doctor immediately. Any fluid injected into the skin must be surgically removed within a few hours or gangrene may result. Doctors unfamiliar with this type of injury should reference a knowledgeable medical source. Such information is available from Deere & Company Medical Department in Moline, Illinois, U.S.A. Information may be obtained in the United States and Canada only by calling 1-800-822-8262.

jdservicemanual.com

Prevent Fires

• Machine fires and structure fires can occur if a machine is stored before allowing it to cool, if debris is not removed from critical areas of the machine, or if machine is stored near combustible materials.

• Remove grass and debris completely from engine compartment and muffler area, and from on top of the mower deck, before and after operating machine, especially after mowing or mulching in dry conditions.

• Empty any grasscatcher bags or containers completely before storing.

• Always shut off fuel when storing or transporting machine, if the machine has a fuel shutoff.

• Do not store machine near an open flame or source of ignition, such as a water heater or furnace.

• Check fuel lines, tank, cap, and fittings frequently for cracks or leaks. Replace if necessary.

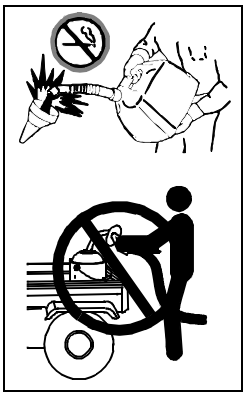

Handling Fuel Safely

To avoid personal injury or property damage, use extreme care in handling fuel. Fuel is extremely flammable and fuel vapors are explosive:

• Extinguish all cigarettes, cigars, pipes, and other sources of ignition.

• Use only an approved fuel container. Use only non-metal, portable fuel containers approved by the Underwriter's Laboratory (U.L.) or the American Society for Testing & Materials (ASTM). If using a funnel, make sure it is plastic and has no screen or filter.

• Never remove the fuel tank cap or add fuel with the engine running. Allow engine to cool before refueling.

• Never add fuel to or drain fuel from the machine indoors. Move machine outdoors and provide adequate ventilation.

• Clean up spilled fuel immediately. If fuel is spilled on clothing, change clothing immediately. If fuel is spilled near machine, do not attempt to start the engine but move the machine away from the area of spillage. Avoid creating any source of ignition until fuel vapors have dissipated.

• Never store the machine or fuel container where there is an open flame, spark, or pilot light such as on a water heater or other appliance.

• Prevent fire and explosion caused by static electric discharge. Static electric discharge can ignite fuel vapors in an ungrounded fuel container.

• Never fill containers inside a vehicle or on a truck or trailer bed with a plastic liner. Always place containers on the ground away from your vehicle before fueling.

• Remove fuel-powered equipment from the truck or trailer and refuel it on the ground. If this is not possible, then refuel such equipment with a portable container, rather than from a fuel dispenser nozzle.

• Keep the nozzle in contact with the rim of the fuel tank or container opening at all times until the fueling is complete. Do not use a nozzle lock-open device.

• Never overfill fuel tank. Replace fuel tank cap and tighten securely.

• Replace all fuel container caps securely after use.

• For gasoline engines, do not use gas with methanol. Methanol is harmful to your health and to the environment.

Tire Safety

Explosive separation of a tire and rim parts can cause serious injury or death:

• Do not attempt to mount a tire without the proper equipment and experience to perform the job.

• Always maintain the correct tire pressure. Do not inflate the tires above the recommended pressure. Never weld or heat a wheel and tire assembly. The heat can cause an increase in air pressure resulting in a tire explosion. Welding can structurally weaken or deform the wheel.

• When inflating tires, use a clip-on chuck and extension hose long enough to allow you to stand to one side and NOT in front of or over the tire assembly.

• Check tires for low pressure, cuts, bubbles, damaged rims or missing lug bolts and nuts.

Checking Wheel Hardware

• A serious accident could occur causing serious injury if wheel hardware is not tight.

• Check wheel hardware tightness often during the first 100 hours of operation.

• Wheel hardware must be tightened to specified torque using the proper procedure anytime it is loosened.

Handling Waste Product and Chemicals

Waste products, such as, used oil, fuel, coolant, brake fluid, and batteries, can harm the environment and people:

• Do not use beverage containers for waste fluids - someone may drink from them.

• See your local Recycling Center or authorized dealer to learn how to recycle or get rid of waste products.

• A Material Safety Data Sheet (MSDS) provides specific details on chemical products: physical and health hazards, safety procedures, and emergency response techniques. The seller of the chemical products used with your machine is responsible for providing the MSDS for that product.

Assembly

Charge and Connect Battery

CAUTION: Avoid injury! The battery produces a flammable and explosive gas. The battery may explode:

- **Do not smoke or have open flame near battery.**
- **Wear eye protection and gloves.**
- **Never check battery charge by placing a metal object across the posts. Use a voltmeter or hydrometer.**
- **Do not jump start or charge a frozen battery. Warm battery to 16°C (60°F).**

1. Remove and discard the red positive (+) protective cap from the positive (+) battery terminal.

2. Charge the battery.

   • Battery is fully charged at 12.6 volts.

3. Connect positive (+) battery cable to battery.

4. Connect negative (–) battery cable.

5. Apply general purpose grease or silicone spray to terminal to help prevent corrosion.

6. Slide red cover over positive battery cable.

Install Seat

1. Remove nut and bolt holding foot plate down. Do not discard hardware. Raise foot plate with seat attached.

2. Remove and discard four bolts holding seat onto foot plate.

3. Lower foot plate and secure with nut and bolt.

Install Seat (Z445)

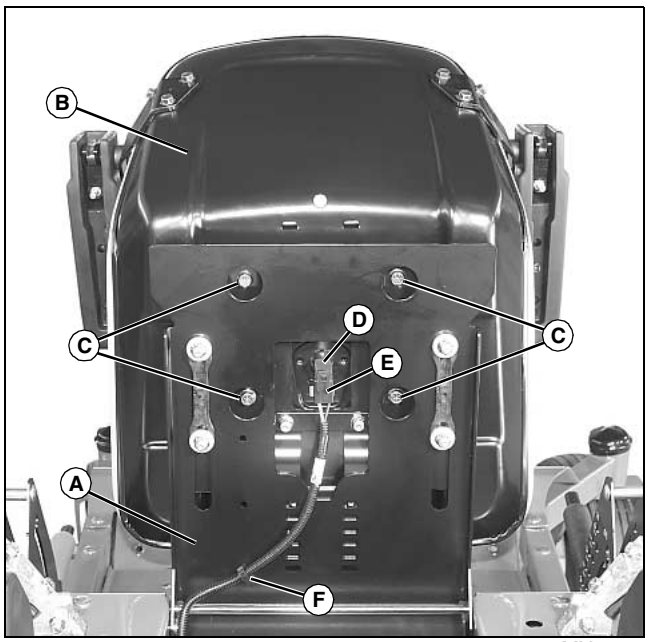

MX38092

1. Raise seat platform (A), and install seat (B) onto platform. Secure with four supplied bolts (C).

2. Remove seat switch from harness.

3. Insert switch (D) in lower (square shaped) part of seat slot. Push switch all the way down into seat, compressing switch plunger against bottom of seat. Slide switch upward toward top of slot to snap into position.

4. Plug wire harness connector (E) into switch. Route harness on bottom of seat and secure harness retainer (F) into hole in seat platform.

5. Lower seat.

Install Seat (Z465)

NOTE: Seat on Z465 is shipped with back of seat in a horizontal position for shipping only. Do not operate machine with seat in this horizontal position.

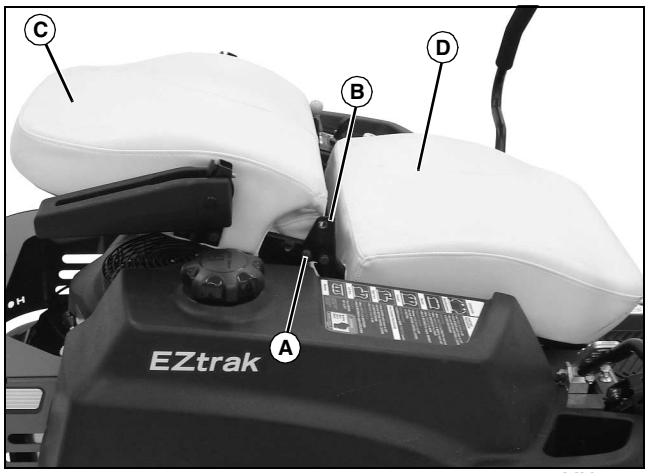

MX43703

1. Remove two rear bolts (A) from seat bracket (B). Retain bolts, but discard plastic washers behind bolts.

2. Remove seat back (C).

3. Raise seat platform (D).

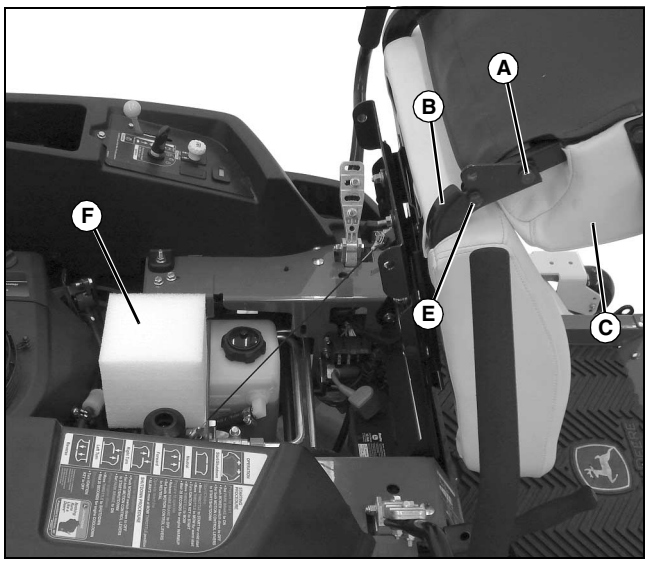

MX43719

4. Install seat back (C) to the upright (vertical) position onto bracket (B). Secure with two bolts (A) just removed.

5. Tighten bolts (A) and check and tighten pivot bolts (E) to 24 N•m (18 lb-ft).

6. Remove and discard foam packaging block (F) from under seat.

7. Lower seat.

Check Tire Pressure

Check tire pressure. (See Checking Tire Pressure in the SERVICE MISCELLANEOUS section.)

Install and Level Mower Deck (Z465)

Install and level mower deck. (See Installing Mower (62 Inch Mower) in the

SERVICE MOWER Section and Adjusting Mower Level in the OPERATING Section.)

Adjust Mower Deck Level (42, 48 and 54 Mower)

Adjust mower deck level. (See Adjusting Mower Deck Level in the OPERATING section.)

Check Engine Oil Level

Check engine oil level. (See Checking Engine Oil Level in the SERVICE ENGINE section.)

Check Machine Safety System

Perform safety system check to make sure the electronic safety interlock circuit is functioning properly. Perform all tests. (See Testing Safety System in the OPERATING section.)

Operating - Controls

Operator Station Controls

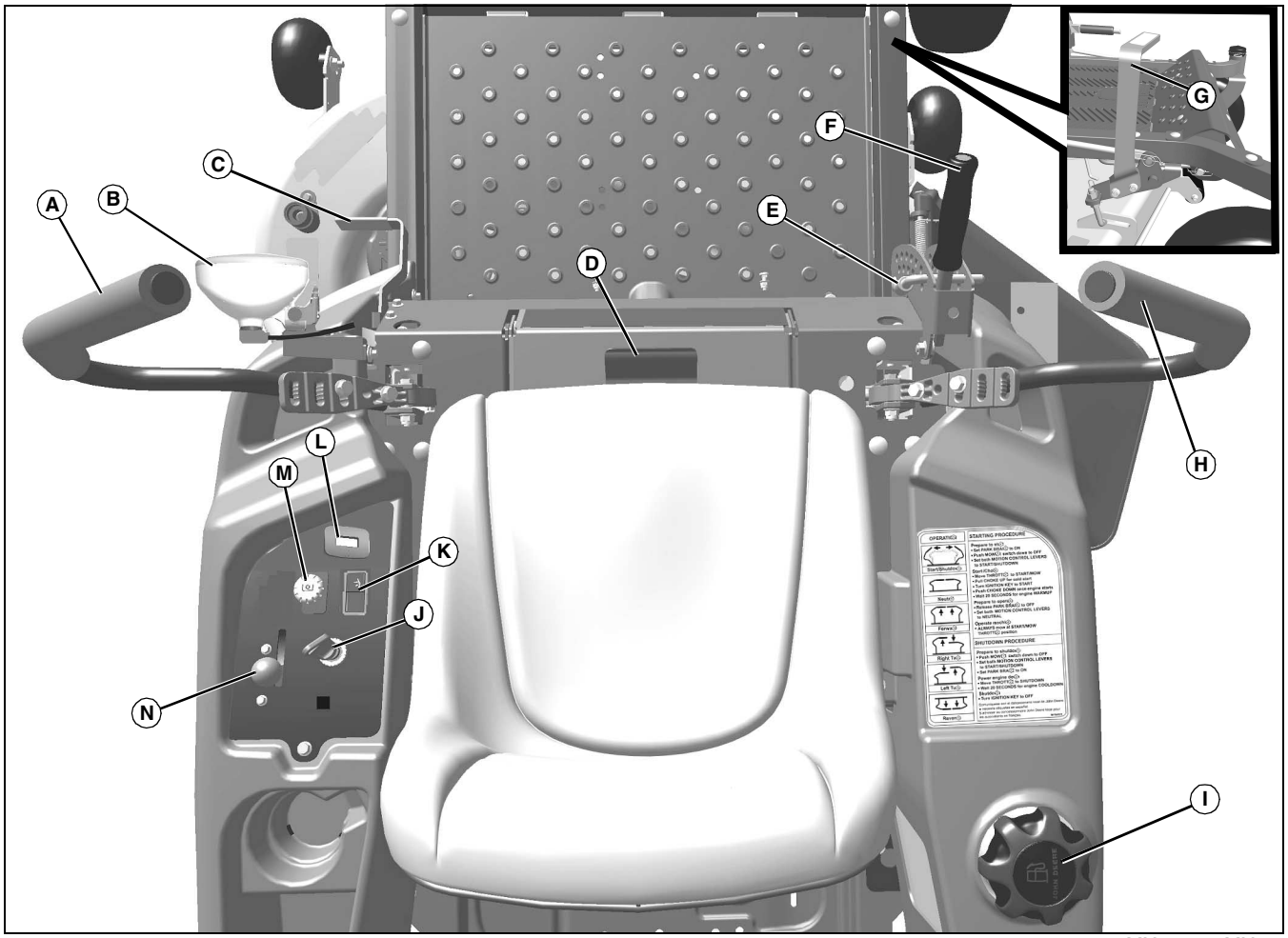

MX40981, MX41661

Key	Description	Key	Description
A	Left Motion Control Lever	H	Right Motion Control Lever
B	Headlight (If equipped) Left available for Z225, Left and Right available for Z245, Z425, Z445 and Z465.	I	Fuel Tank Cap
C	Park Brake Lever (Z225 and Z245 style shown)	J	Ignition Key Switch
D	Seat Adjustment Lever	K	Headlight Switch (If equipped)
E	Deck Height Pin	L	Hourmeter
F	Mower Deck Lift Lever	M	Mower Engagement Switch
G	Mower Deck Lift Pedal (Z445 with 54 in. High Capacity deck only)	N	Throttle/Choke Control Lever

Operating

Daily Operating Checklist

❏ Test safety systems.

❏ Check fuel level.

❏ Check engine oil level.

❏ Remove grass and debris from engine compartment and muffler area, and on top of mower deck, before and after operating machine.

❏ Check transaxle oil level - sight bottle (Z425, Z445, Z465).

❏ Clean air intake screen.

❏ Check area below machine for leaks.

Avoid Damage to Plastic and Painted Surfaces

• Do not wipe plastic parts unless rinsed first. Using a dry cloth may cause scratches.

• Insect repellent spray may damage plastic and painted surfaces. Do not spray insect repellent near machine.

• Be careful not to spill fuel on machine. Fuel may damage surface. Wipe up spilled fuel immediately.

• Prolonged exposure to sunlight will damage hood surfaces.

Mounting and Dismounting Machine

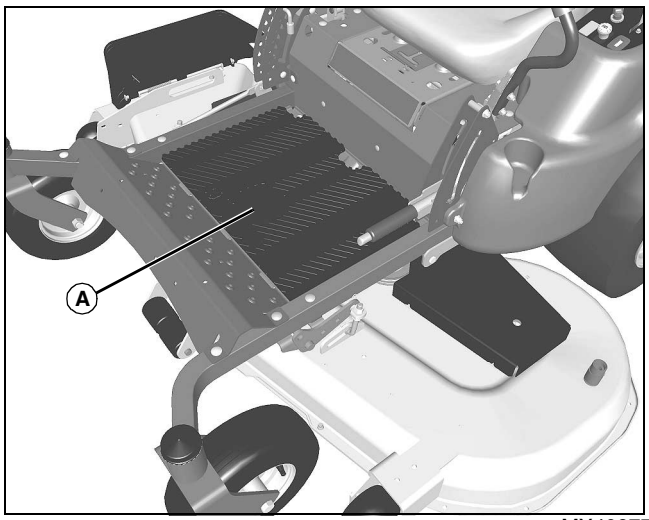

MX40977

• Do not step on the mower deck when mounting and dismounting the machine.

• Mount the machine from the front using the foot plate (A).

• Park machine safely before dismounting (see Parking Safely in the SAFETY section).

• Keep the foot plate clean.

Adjusting Seat

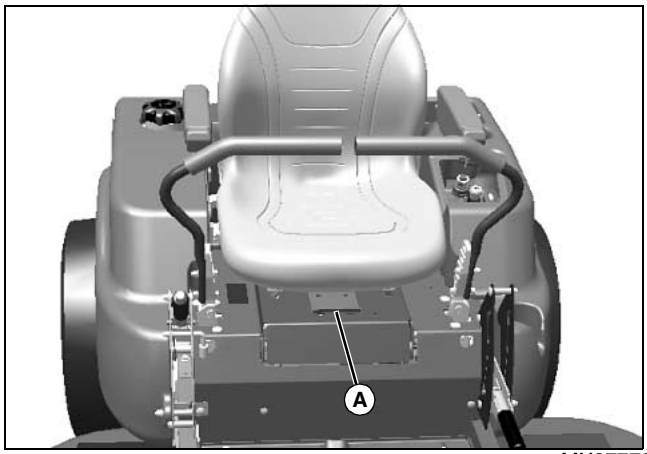

MX37772

1. Pull lever (A) upward.

2. Slide seat forward or rearward to desired position.

3. Release lever.

Adjusting Armrests (If Equipped)

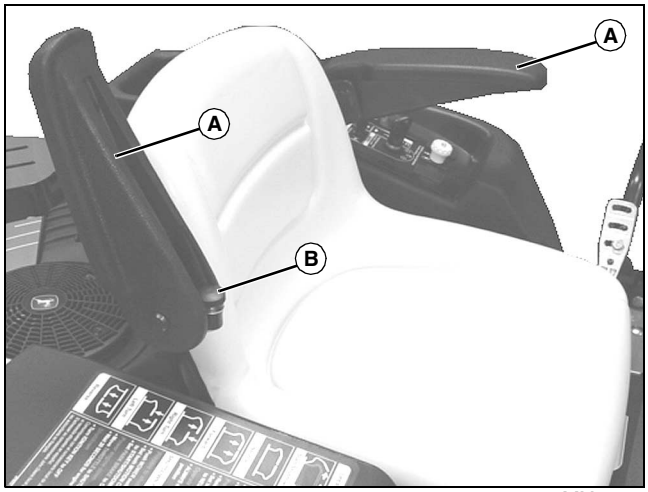

MX38908

1. Raise each armrest (A).

2. Turn adjustment knob (B) clockwise to lower armrest and counterclockwise to raise armrest. Lower armrests.

Adjusting Motion Control Levers

1. Park machine safely. (See Parking Safely in the SAFETY section.)

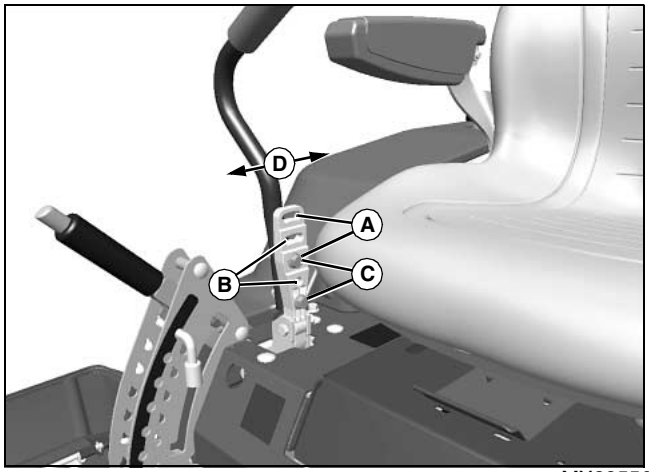

MX39556

2. To adjust motion control lever height, remove two bolts and nuts and raise or lower each control lever to your comfort level.

- For highest lever position, use holes (A).
- For medium lever position, use holes (B).
- For lowest lever position, use holes (C).

3. You can also adjust motion control levers slightly forward or rearward (D) within slotted holes.

Adjusting Cutting Height

Cutting height can be adjusted from approximately 25-100 mm (1-4 in.). When mower deck is in transport position cutting height is approximately 100 mm (4 in.).

1. Check tire pressure and adjust as needed.

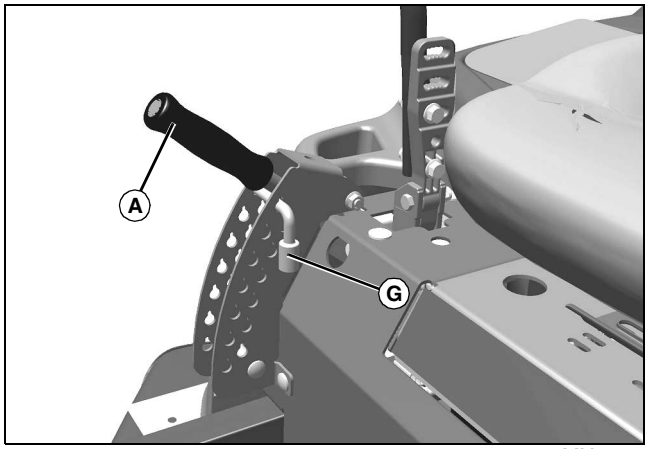

MX40976

Picture Note: Z225 and Z245

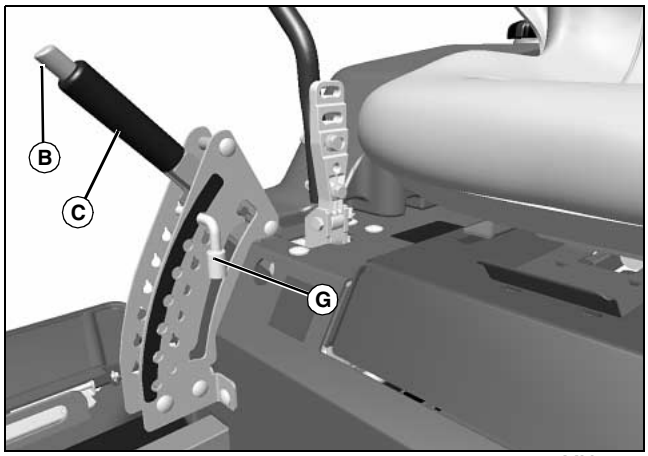

MX39555

Picture Note: Z425, Z445, and Z465

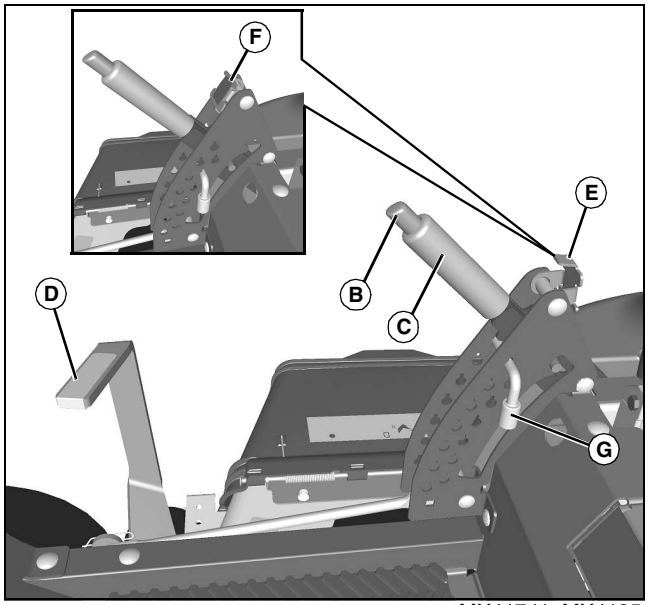

MX41741, MX41854

Picture Note: Z445 (54 in. HC Deck)

2. Raise mower deck:

- Z225 and Z245 - Pull upward on mower deck lift lever (A) and pull

lever towards center of machine to lock in raised position.

- Z425, Z445, and Z465 - Push in button (B) and pull upward on mower deck lift lever (C) until in fully raised position.

NOTE: On Z445 (54 in. HC deck) models, lift stop must be rotated upward (E) for deck to lock in the raised position. When lift stop is rotated down (F), pushing on lift pedal will allow you to raise and lower deck without having it lock in the raised position.

- Z445 (54 in. HC Deck) - Push in button (B), push down on lift pedal (D), and pull upward on mower deck lift lever (C) until in fully raised position.

3. Insert the pin (G) in the proper hole for the desired height of cut.

4. Lower mower deck:

- Z225 and Z245 - Lift slightly on mower deck lift lever, push slightly outward, and lower lift lever (A) onto pin (G).
- Z425, Z445, and Z465 - Push in button (B) and lower mower deck lift lever (C) onto pin (G).
- Z445 (54 in. HC Deck) - Place foot on lift pedal (D), push in button (B), and release lift pedal rearward while lowering mower deck lift lever (C) onto pin (G).

Adjusting Mower Level

CAUTION: Avoid injury! Rotating blades are dangerous. Before adjusting or servicing mower:

- **Disconnect spark plug wire(s) or battery negative (-) cable to prevent engine from starting accidently.**
- **Always wear gloves when handling mower blades or working near blades.**

NOTE: Mower wheels should not contact the ground when leveling the deck.

1. Park machine safely. (See Parking Safely in the SAFETY section.)

2. Inflate tires to the correct pressure.

3. Position caster wheels to the forward driving position.

4. Set mower to preferred cutting height, and lower deck into the mowing position.

5. Measure mower level (side-to-side).

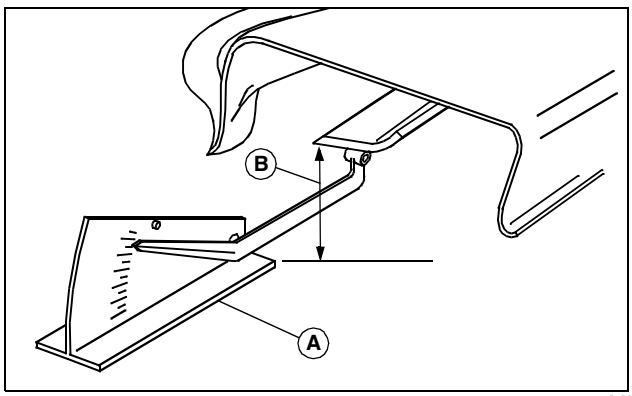

MIF

Picture Note: A convenient leveling gauge (A) (AM130907) is available from your dealer.

a. Position mower blades as follows and measure from each outside blade tip (B) to the level surface.

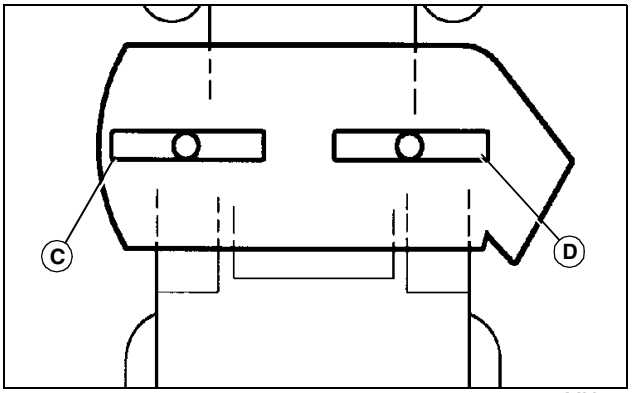

MX4896

b. Turn left blade (C) as shown. Hold drive belt and turn right blade (D) as shown. Take measurement for both blades.

The difference between blade measurements must not be more than 3 mm (1/8 in.).

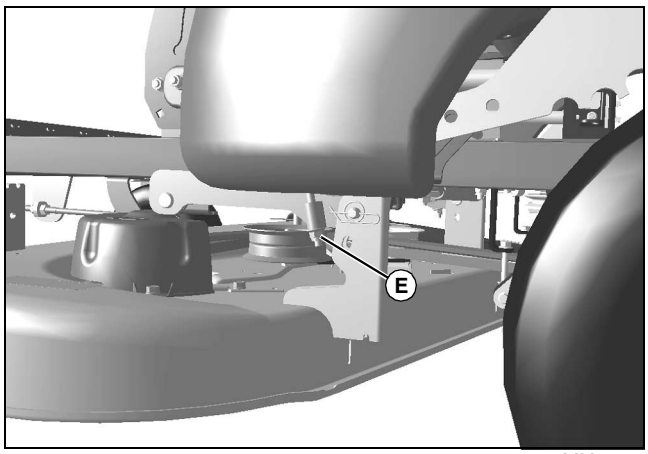

MX37773

c. Adjust mower level, if necessary, by turning rear nuts (E) clockwise to raise the side of the mower deck, or counterclockwise to lower the mower deck.

6. Measure mower level (front-to-rear).

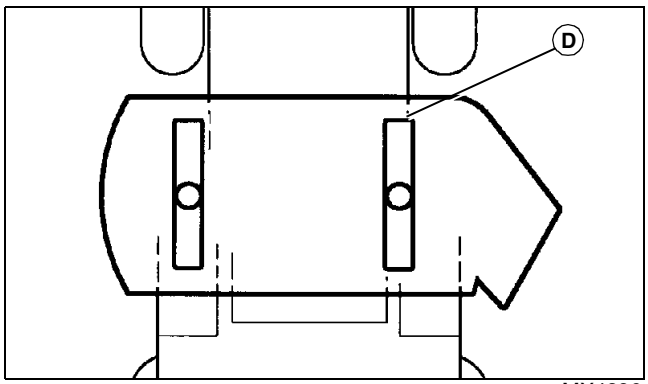

MX4896a

a. Turn right blade (D) so blade tip points straight forward.

b. Measure from blade tip to the surface. Take measurement for both blades. The front blade tip must be 3 - 6 mm (1/8 - 1/4 in.) lower than rear blade tip.

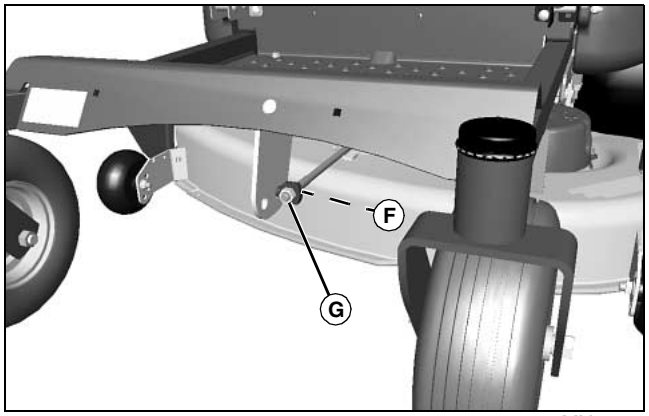

MX39626

c.42 inch mower deck: Adjust mower level, if necessary, by loosening rear nut (F) on front lift rod. Turn front nut (G) clockwise to raise front of mower or counterclockwise to lower it. Tighten rear nut after adjustment is complete.

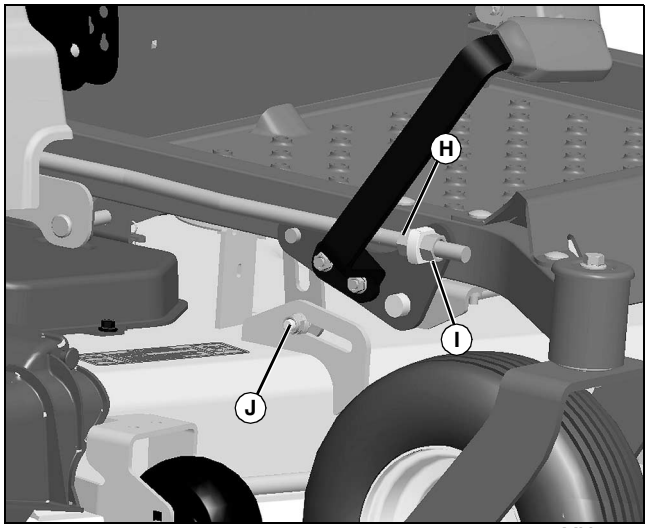

MX43842

d.Z445 (54 in. HC) and Z465 (62 in.) mower decks: Adjust mower level, if necessary, by loosening nut (H). Turn front nut (I) clockwise to lower front of mower or counterclockwise to raise front of mower. Tighten rear nut after adjustment is complete. Make certain, at the start, that bolt (J) is at top of slot as shown. If either side is not carrying load at the completion of leveling, the bolt can be loosened and slid downward in the slot slightly to even the load between the hangers on either side.

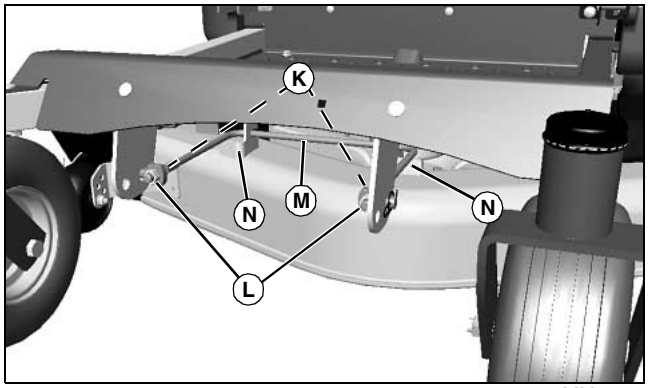

MX39628

Picture Note: 48 in. deck shown.

e.48 and 54 (all other models): Adjust mower level, if necessary, by loosening rear nuts (K) on front lift rod. Turn front nuts (L) clockwise to raise front of mower or counterclockwise to lower it. Make sure front lift rod (M) contacts mower deck bracket on both sides (N) to maximize stability of deck. Tighten rear nut after adjustment is complete.

NOTE: Verify that deck will latch in transport position. If it does not latch, turn both rear adjusting nuts counter-clockwise equally to lower rear of deck until deck latch will engage. Check front lift rod adjustment, adjust if necessary.

Adjusting Mower Wheels

CAUTION: Avoid injury! Rotating blades are dangerous. Before adjusting or servicing mower:

- **Disconnect spark plug wire(s) or battery negative (-) cable to prevent engine from starting accidently.**
- **Always wear gloves when handling mower blades or working near blades.**

IMPORTANT: Avoid damage! The mower deck can be damaged if mower wheels are adjusted wrong:

- **Wheels must not ride on ground supporting mower weight.**
- **Check wheel adjustment each time cutting height is changed.**

1. Park machine safely on a level surface. (See Parking Safely in the SAFETY section).
2. Inflate tires to correct pressure.
3. Raise mower deck lift lever, and lock in transport position.
4. Adjust mower wheels to correct height:

42 Inch Mower

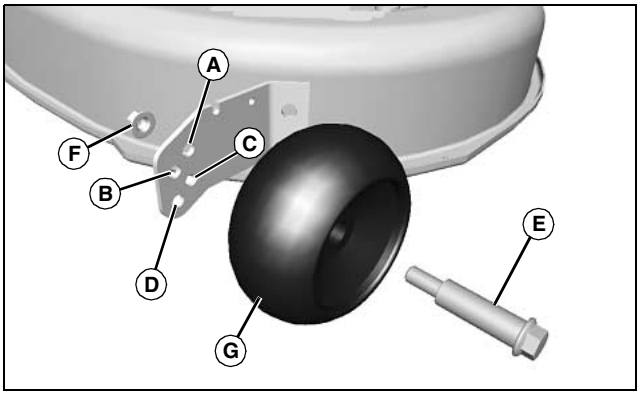

MX36202

Position 1 (A)	25 - 38 mm (1 - 1-1/2 in.) Height of Cut
Position 2 (B)	44 - 50 mm (1-3/4 - 2 in.) Height of Cut
Position 3 (C)	57 - 69 mm (2-1/4 - 2-3/4 in.) Height of Cut
Position 4 (D)	76 - 101 mm (3 - 4 in.) Height of Cut

• Remove shoulder bolt (E) and nut (F). Move wheel (G) to proper hole position. Secure with shoulder bolt and nut. Tighten nut to 34 N•m (25 lb-ft).

48 Inch Mower (Z245)

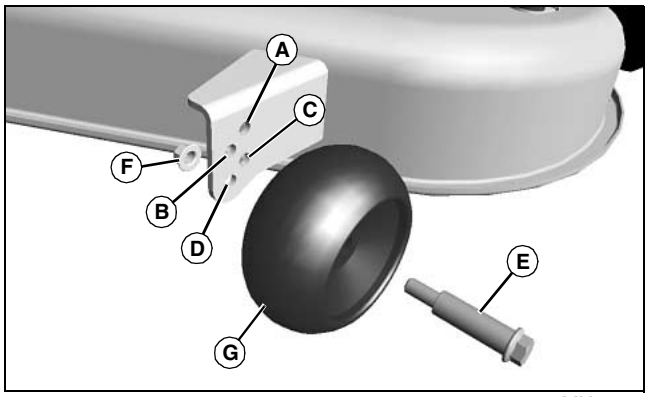

MX39715

Position 1 (A)	Disables anti-scalp feature (should not be used)
Position 2 (B)	25 - 50 mm (1 - 2 in.) Height of Cut
Position 3 (C)	57 - 76 mm (2-1/4 - 3 in.) Height of Cut
Position 4 (D)	82 - 101 mm (3-1/4 - 4 in.) Height of Cut

• Remove shoulder bolt (E) and nut (F). Move wheel (G) to proper hole position. Secure with shoulder bolt and nut. Tighten nut to 34 N•m (25 lb-ft).

48 and 54 Inch Mowers (Z400 Series)

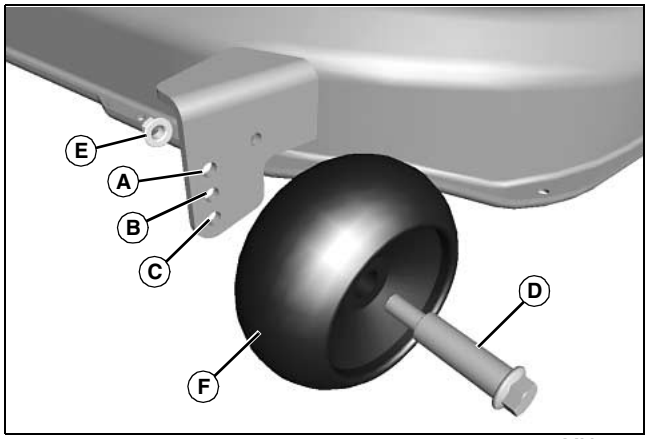

MX39716

Position 1 (A)	25 - 44 mm (1 - 1-3/4 in.) Height of Cut
Position 2 (B)	50 - 69 mm (2 - 2-3/4 in.) Height of Cut
Position 3 (C)	76 - 101 mm (3 - 4 in.) Height of Cut

• Remove shoulder bolt (D) and nut (E). Move wheel (F) to proper hole position. Secure with shoulder bolt and nut. Tighten nut to 34 N•m (25 lb-ft).

54 Inch High Capacity Mower (Z445)

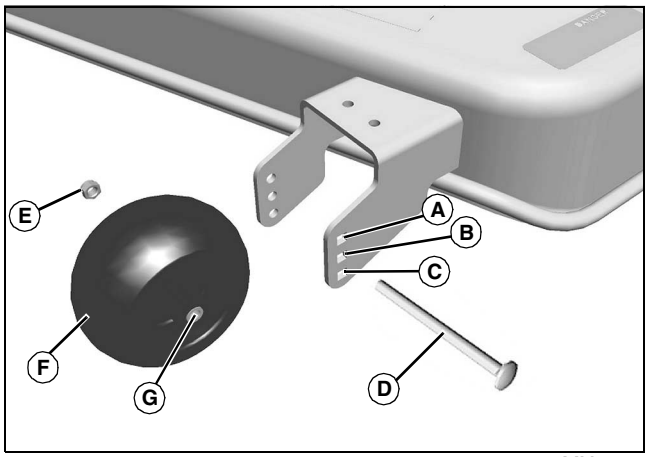

MX41278

Position 1 (A)	25 - 44 mm (1 - 1-3/4 in.) Height of Cut
Position 2 (B)	50 - 69 mm (2 - 2-3/4 in.) Height of Cut
Position 3 (C)	76 - 101 mm (3 - 4 in.) Height of Cut

• Remove carriage bolt (D) and nut (E). Move wheel (F) and axle (G) to proper hole position. Secure with carriage bolt and nut. Tighten nut to 24 N•m (18 lb-ft).

62 Inch Mower

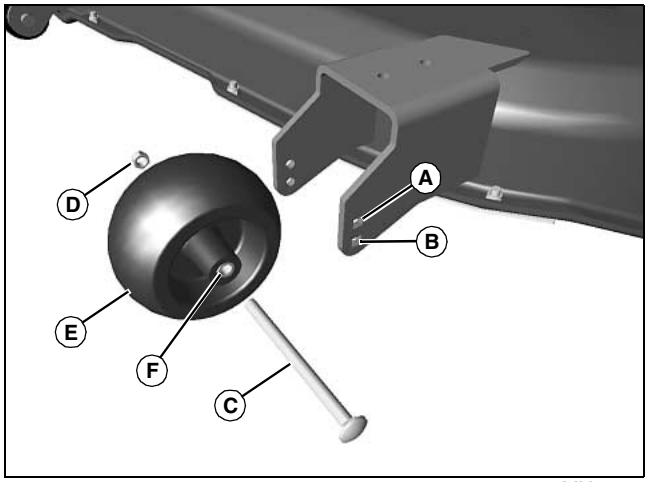

MX39616

Position 1 (A)	25 - 50 mm (1 - 2 in.) Height of Cut
Position 2 (B)	57 - 101 mm (2-1/4 - 4 in.) Height of Cut

• Remove carriage bolt (C) and nut (D). Move wheel (E) and axle (F) to proper hole position. Secure with carriage bolt and nut. Tighten nut to 24 N•m (18 lb-ft).

Testing Safety Systems

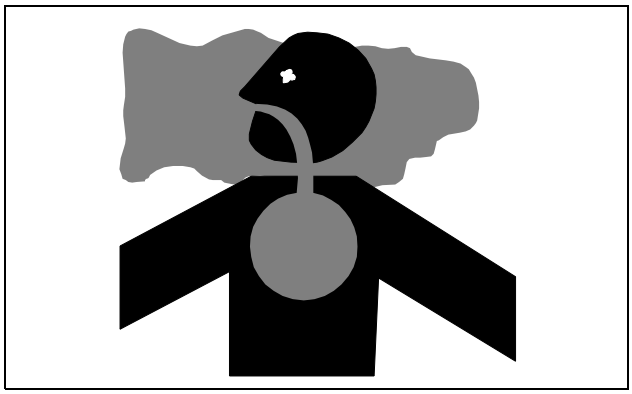

CAUTION: Avoid injury! Engine exhaust fumes contain carbon monoxide and can cause serious illness or death.

Do not run an engine in an enclosed area, such as a garage, even with doors or windows opened.

Move the machine to an outside area before running the engine.

The safety systems installed on your machine should be checked before each machine use. Be sure you have read the machine operator manual and are completely familiar with the operation of the machine before performing these safety system checks.

Use the following checkout procedures to check for normal operation of machine.

If there is a malfunction during one of these procedures, do not operate machine. **See your authorized dealer for service.**

Perform these tests in a clear open area. Keep bystanders away.

Testing Park Brake Switch

1. Park machine safely. (See Parking Safely in the SAFETY section.)
2. Sit on seat.
3. Unlock the park brake.
4. Try to start engine.

Result: Engine must not crank. If engine cranks, there is a problem with your safety interlock circuit.

Testing Park Brake

1. Park machine safely. (See Parking Safely in the SAFETY section.)
2. Engage bypass valve lever.
3. Lock the park brake.
4. Try to push machine manually.

Result: Park brake must prevent machine from moving. If machine moves, parking brake needs to be adjusted.

Testing Mower Engagement (PTO) Switch

1. Park machine safely. (See Parking Safely in the SAFETY section.)
2. Sit on seat.
3. Lock the park brake.
4. Engage the mower.
5. Try to start engine.

Result: Engine must not crank. If engine cranks, there is a problem with your safety interlock circuit.

Testing Seat Switch

1. Park machine safely. (See Parking Safely in the SAFETY Section.)
2. First test:
   a. Lock park brake.
   b. Start engine.
   c. Move throttle lever up to maximum engine speed.
   d. Engage mower.
   e. Raise up off seat. Do not get off machine.

Result: Engine and mower blades should stop. If engine and mower blades do not stop, there is a problem with your safety interlock circuit.

3. Second test:
   a. Disengage mower.
   b. Start engine.
   c. Unlock park brake.
   d. Raise up off seat. Do not get off machine.

Result: Engine should stop. If engine does not stop, there is a problem with your safety interlock circuit.

4. Third test:
   a. Lock park brake.
   b. Disengage mower.
   c. Start engine.
   d. Raise up off seat. Do not get off machine.

Result: Engine should continue to run. If engine stops, there is a problem

with your safety interlock circuit.

Testing Motion Control Lever Switch

1. Park machine safely. (See Parking Safely in the SAFETY Section.)
2. Sit on seat.
3. First test:
   a. With the park brake locked, start engine.
   b. Move right motion control lever inward.

Result: Engine should stop. If engine does not stop, there is a problem with your safety interlock circuit.

4. Second test:
   a. Start engine.
   b. Release park brake.
   c. Move right motion control lever inward.

Result: Engine should continue to run. If engine stops, there is a problem with your safety interlock circuit.

5. Repeat first and second test using left motion control lever.

Using Park Brake

CAUTION: Avoid injury! Children or bystanders may attempt to move or operate an unattended machine.

Always lock the park brake and remove the key before leaving the machine unattended.

Z200 Series

Setting Park Brake

1. Raise park brake lever to lock park brake.

Releasing Park Brake

1. Lower park brake lever to unlock park brake.

Z400 Series

Setting Park Brake

1. Press button, and raise park brake lever to lock park brake.

Releasing Park Brake

1. Press button, and lower park brake lever to unlock park brake.

Using Key Switch

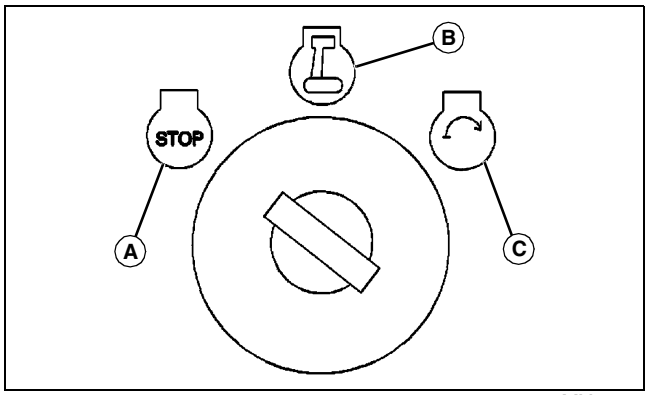

MX31338

A - STOP (off) position - With key in the STOP position, all switched power is off, and engine should not run.

B - Run (on) position - Turn key from STOP to this position, and all switched power circuits will be on.

C - Start position - Turn key to start position to crank the engine. Release key after engine has started and it will automatically return to the on position. The engine will continue to run.

Using Mower Engagement Switch

- To Engage Mower - Pull mower engagement knob up.
- To Disengage Mower - Push mower engagement knob down.

Using the Hour Meter

- The hour meter shows the number of hours the engine has run. The hour meter does not accumulate hours with the engine off when the key is in the run position. Use the hour meter to determine when your machine has reached the recommended service intervals.
- Turn the key to STOP position when not using the machine.
- Hour meter cannot be reset.

Using the Motion Control Levers

CAUTION: Avoid injury! Learn use of the motion control levers and practice at half throttle until becoming proficient and comfortable with the operation of the machine.

Do not move motion control levers from forward to reverse or reverse to forward position rapidly. Sudden direction changes could cause loss of control or damage the machine.

Before using the machine, become familiar with the motion control levers and how they respond. It is essential to know how the machine accelerates, steers and stops.

The functions of the motion control levers are:

- Dual function neutral position.
- Steering.
- Acceleration.
- Braking.

Start/shutdown Position

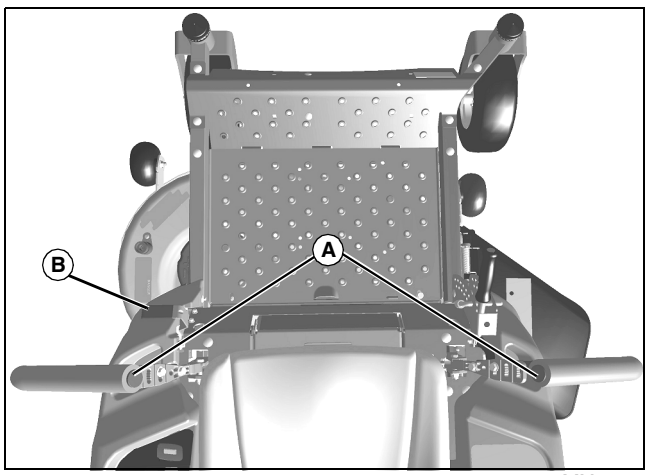

MX40982

- Motion control levers must be in the start/shutdown position (A) and the park brake locked (B) to start the engine.

• Forward and reverse movement of the motion control levers is prevented when levers are moved to the start/shutdown position.

• Operator can exit mower with the engine running when the mower engagement switch is disengaged, the motion control levers are in the start/shutdown position and the park brake is locked.

• Motion control levers must be in the start/shutdown position to safely enter and exit the operator seat.

Neutral Position

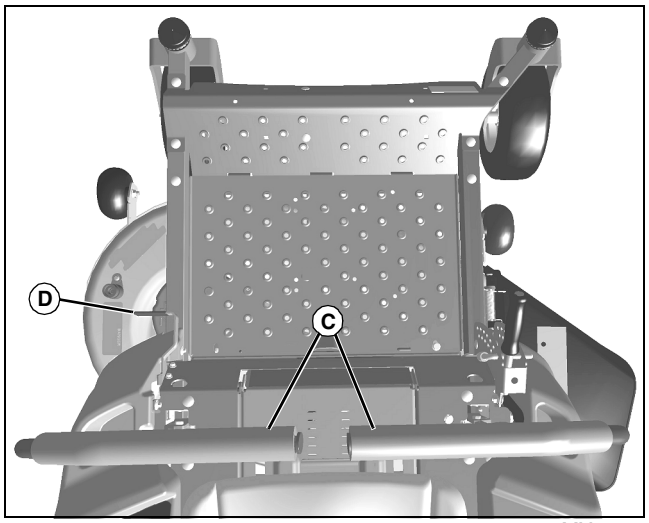

MX40983

• Machine speed, motion, and direction can be controlled when the engine is running, motion control levers are in the neutral position (C), and the park brake is unlocked (D).

• To stop the machine for an emergency, move the motion control levers quickly back to the neutral position.

Forward and Reverse Travel

Straight forward and reverse travel takes practice. If the machine does not track in a straight line when going forward or reverse, the motion control lever tracking may need adjusting.

1. Move throttle lever to the mow position.

2. Unlock park brake.

3. Move both motion control levers from the start/shutdown position inward to the neutral position.

4. Move the motion control levers forward to begin forward travel.

5. Move the motion control levers rearward to begin reverse travel.

6. To stop travel, move motion control levers back to the neutral position.

Forward Travel

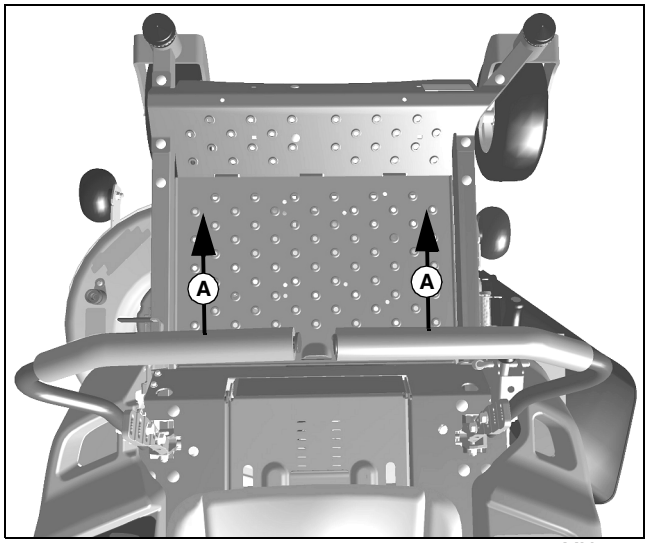

MX40984

1. Gradually move both motion control levers evenly forward (A) from neutral. To speed up, move the levers farther forward. To slow down smoothly, slowly move the levers toward neutral.

Reverse Travel

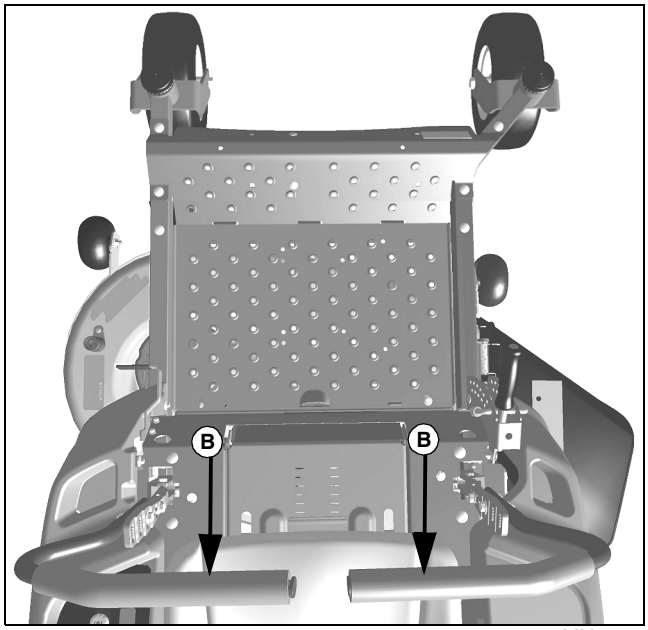

MX40985

1. Look down and behind, then gradually move both motion control levers evenly rearward (B) from neutral. To speed up, move the levers farther rearward. To slow down smoothly, slowly move the levers toward neutral.

Left Turn

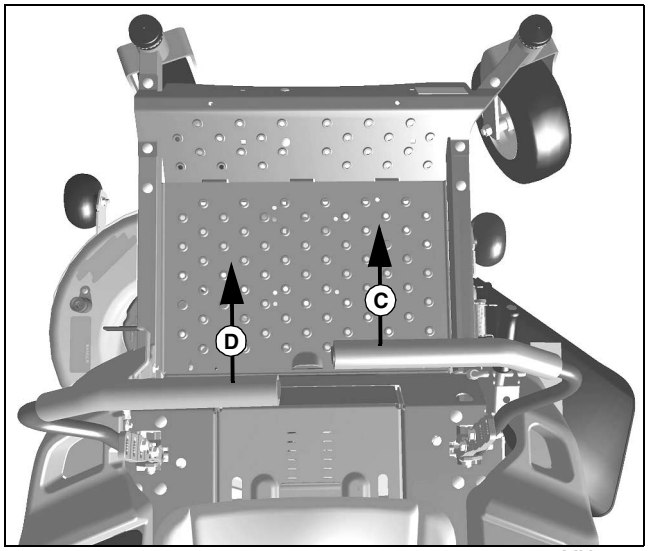

MX40986

1. To turn slightly to the left, push right control lever (C) further forward than the left control lever (D).

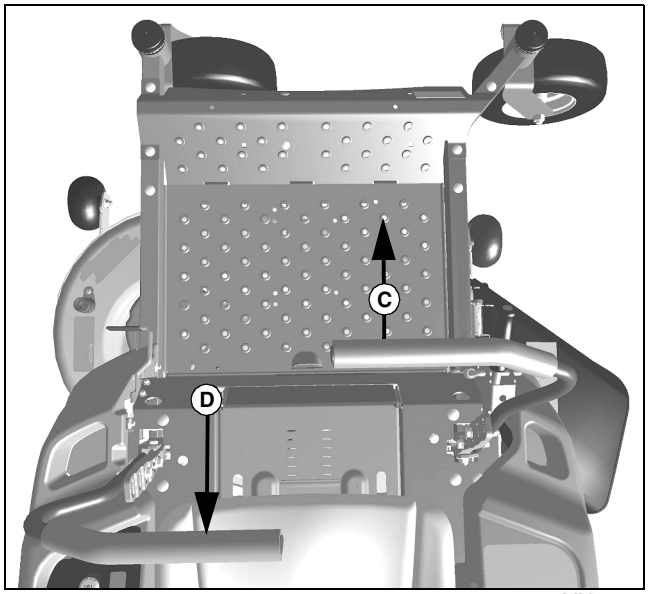

MX40987

2. To turn sharply to the left, push right control lever (C) forward and pull left control lever (D) rearward at the same time.

Right Turn

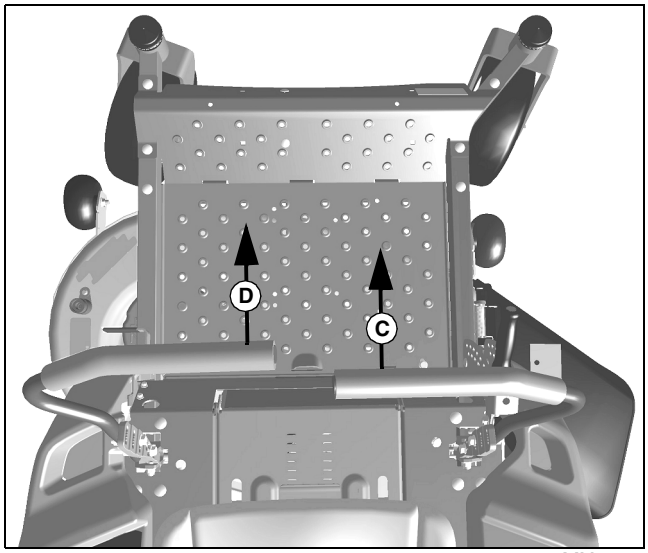

MX40988

1. To turn slightly to the right, push left control lever (D) further forward than the right control lever (C).

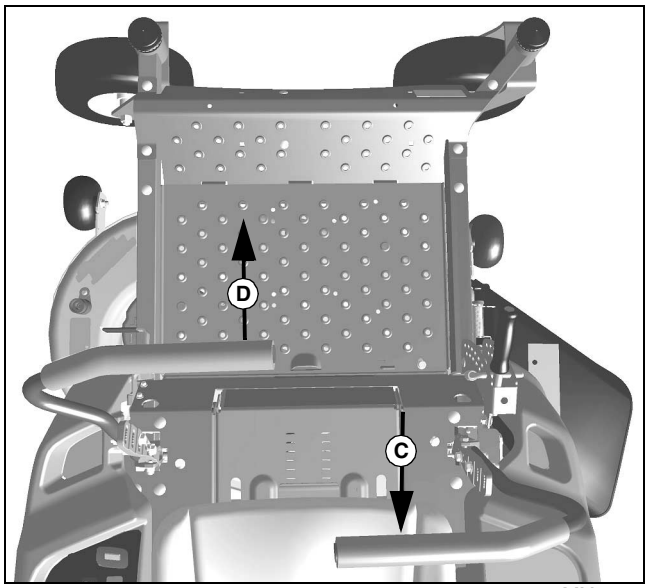

MX41151

2. To turn sharply to the right, push left control lever (D) forward and pull right control lever (C) rearward at the same time.

Starting the Engine

CAUTION: Avoid injury! Engine exhaust fumes contain carbon monoxide and can cause serious illness or death.

Do not run an engine in an enclosed area, such as a garage, even with doors or windows opened.

Move the machine to an outside area before running the engine.

1. Sit on the operator seat.
2. Lock park brake.
3. Push the mower engagement knob down to disengage the mower.

4. Set both motion control levers to the start/shutdown position.

5. Move throttle lever to set engine speed:

- **Cold start:** Set throttle lever to the start position.
- **Warm start:** Set throttle lever to the mow position.

IMPORTANT: Avoid damage! Starter may be damaged if starter is operated for more than 20 seconds at a time:

• Wait two minutes before trying again if engine does not start.

6. Turn key switch to the start position.

7. After engine starts, release key switch to the run position and move throttle to mow position.

IMPORTANT: Avoid damage! Unnecessary engine idling may cause engine damage. Excessive idling can cause engine overheating, carbon build-up, and poor performance.

8. Allow the engine to warm up for 20 seconds.

9. Release park brake.

10. Set both motion control levers to the neutral position.

Engaging Mower

CAUTION: Avoid injury! Clear mowing area of all bystanders when operating this machine. Thrown objects could cause serious injury or death.

Keep hands and feet away from blades and discharge opening.

Do not mow in reverse unless absolutely necessary.

1. Adjust mower to desired cutting height.

2. Start engine.

3. Release park brake.

4. Move both motion control levers to the neutral position.

5. Set throttle lever to the RUN position.

NOTE: For smoother engagement, deck can be engaged at transport position and then lowered to desired cut height.

6. Pull mower engagement switch up to engage mower.

NOTE: The travel speed and turn rate will vary with the amount that the control levers are moved.

7. Push motion control levers forward slowly. Mow at a safe travel speed.

Stopping the Engine

1. Stop machine on a level surface, not on a slope.

2. Push the mower engagement switch down to disengage mower.

3. Move the motion control levers to the start/shutdown position.

4. Lock park brake.

5. Move throttle lever to the shutdown position.

6. Allow the engine to cool down for 20 seconds.

7. Turn ignition key to STOP (off) position.

CAUTION: Avoid injury! Children or bystanders may attempt to move or operate an unattended machine.

Always lock the park brake and remove the key before leaving the machine unattended.

8. Remove key.

Moving Machine by Hand

CAUTION: Avoid injury! When the bypass valve is open, the machine will have unrestricted motion.

• Do not open the bypass valve when the machine is stopped on an incline to prevent it from going downhill out of control.

IMPORTANT: Avoid damage! Transmission damage may occur if the machine is towed or moved incorrectly:

• Move machine by hand only.

• Do not use another vehicle to move machine.

• Do not tow machine.

Z225 and Z245 Models:

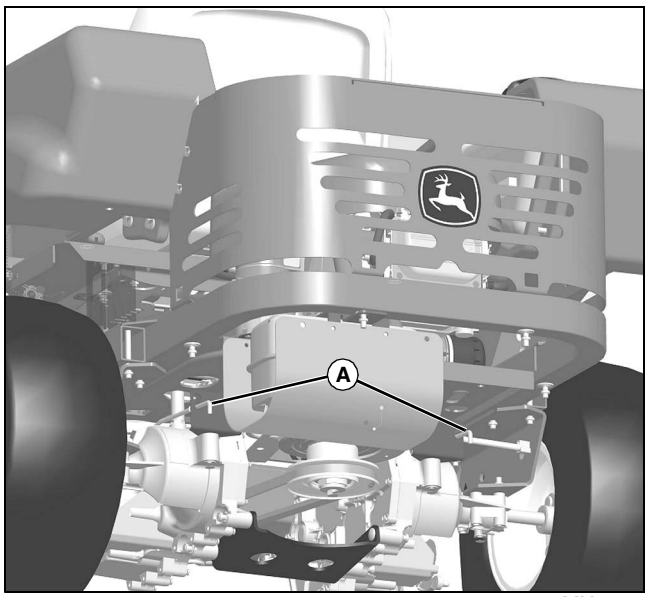

MX37904

1. Pull out both bypass valve levers (A) at rear of machine.

2. Release park brake.

3. Push machine to desired location.

IMPORTANT: Avoid damage! The transmission might be damaged if the bypass valve lever is not pushed back to operating position before attempting to start the engine. Do not start or operate the machine with the bypass valve lever in the push position.

4. Push in both bypass valve levers.

Z425, Z445 and Z465 Models:

When the machine needs to be moved without starting the engine, use the bypass valves:

NOTE: The bypass valves must be fully turned clockwise (closed) during normal vehicle operation.

1. Lock park brake.

2. Raise operator's seat.

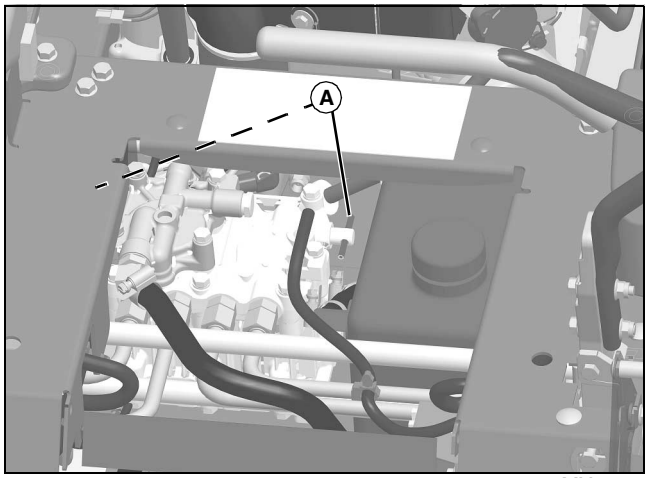

MX37905

3. Turn bypass valves (A) on both sides of pump 1/4 - 1/2 turn counterclockwise (open position).

4. Unlock park brake.

5. Push machine to desired location. Due to hydraulic system drag, machine will move slowly.

IMPORTANT: Avoid damage! The bypass valves can be damaged if overtightened. Use care not to overtighten.

NOTE: Bypass valves should be hand tightened only.

6. Turn both bypass valves clockwise (closed position) until tight.

7. Lock park brake.

Unplugging Mower, Bagger, or Material Collection System

CAUTION: Avoid injury! Do not attempt to unplug attachment with machine running.

- **Rotating blades are dangerous. Shut off the engine and remove the key before getting off the seat to inspect the machine and attachment.**
- **Thrown objects can cause serious injury. Make sure all machine parts are stopped before raising hopper top or removing chutes.**

Checking For Plugging While Driving

If grass builds up in front of mower discharge chute, check for plugged chute or problems with blower assembly (if equipped).

If there is a trail of clippings behind mower or clippings blow to the side, check for plugged chute, full collector bags, or problems with blower assembly.

Removing Debris From Inspection Points:

CAUTION: Avoid injury! Do not use hands or feet to clear plugged mower deck or blower assembly. Stored energy can cause blades to rotate.

1. Park machine safely. Wait for all moving parts to stop before getting off to inspect machine.

2. Open hopper cover. Check chute outlet.

3. Remove chute from mower deck or blower assembly. Check chute inlet.

4. Check under mower deck for debris.

Using Wash Port to Clean Mower Deck

NOTE: Follow this procedure after each use to prevent buildup and remove corrosive lawn chemicals.

1. Park machine safely. (See Parking Safely in the Safety section).

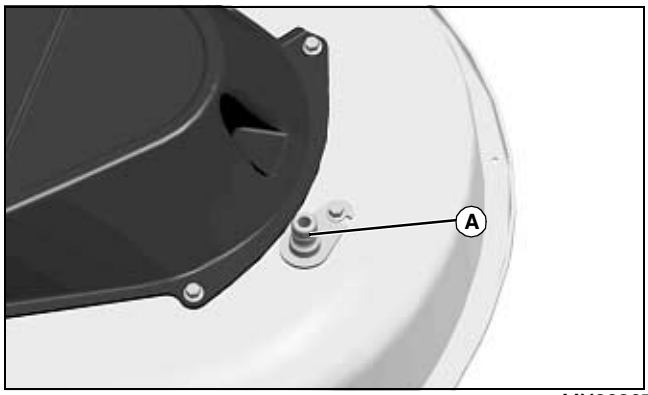

MX38397

2. Attach a garden hose with quick-coupler to wash port (A) on the mower deck.

3. Turn on water.

4. Start engine.

5. Run at full throttle.

6. Engage mower blades.

7. Flush water under deck for approximately one minute.

8. Disengage mower blades.

9. Stop engine.

10. Turn off water and remove garden hose from wash port.

Transporting Machine on Trailer

NOTE: Trailer capacity must exceed combined machine weight and attachment weight. (See Specifications section in operator's manual).

Be sure trailer has all the necessary lights and signs required by law.

CAUTION: Avoid injury! Use extra care when loading or unloading the machine onto a trailer or truck. Machine wheels can go off the ramp or trailer, causing the machine to tip over.

- **To load, back slowly and in a straight line. Keep wheels away from drop-offs and edges.**
- **Do not use two separate loading ramps. Use a full width loading ramp at least 30 cm (12 in.) wider than machine to keep caster wheels from going off the ramp edge.**
- **Use a trailer with sides.**

1. Park trailer on level surface.
2. Raise mower deck before driving machine onto trailer.

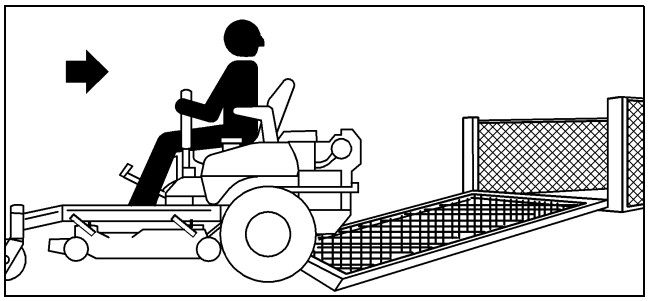

MX22500

3. Back machine onto heavy-duty trailer with full-width ramp.

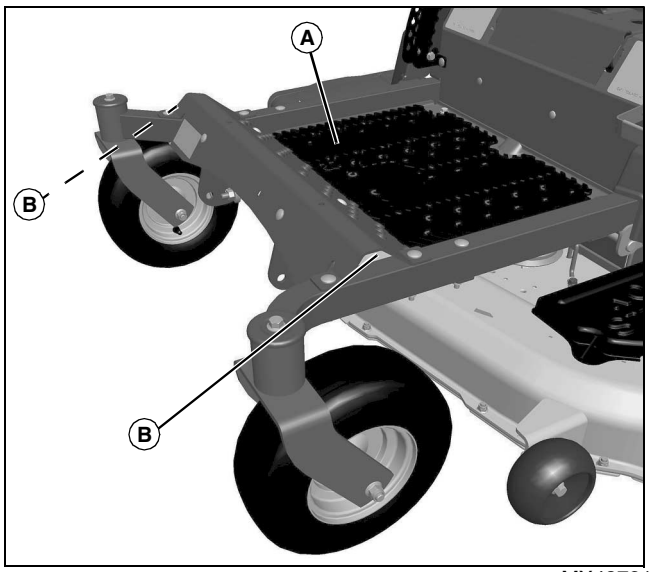

MX43721

4. Remove rubber mat (A) from foot deck.
5. Lower mower deck completely.
6. Lock park brake.
7. Fasten front of machine at both sides of the frame at points (B) to trailer with heavy-duty straps, chains, or cables. Straps must be directed down and outward from machine.
8. Turn off machine and remove key.

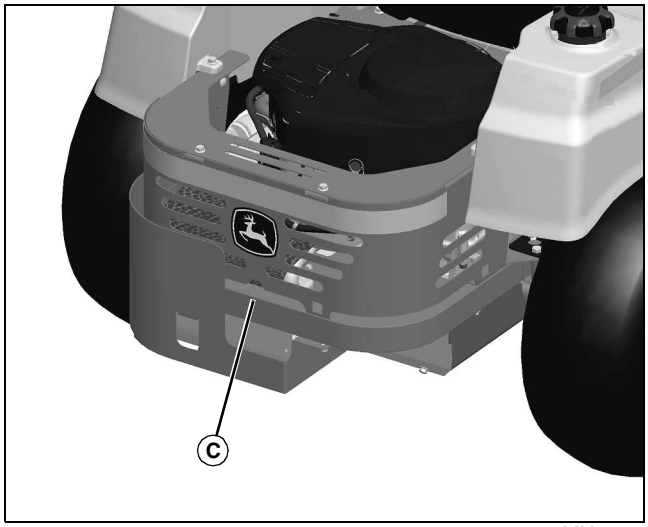

MX43722

Picture Note: Shielding shown is not on all models.

9. Fasten rear of machine at center of frame at point (C) to trailer with a heavy-duty strap, chain, or cable. Strap must be directed down and outward from machine.

Mowing Tips

- Mow grass with throttle lever in the full fast / mow position.
- Mow grass when it is dry.
- Keep mower deck and discharge chute clean.
- Mow with sharp blades.
- Properly level mower deck for a smooth cut.
- Mow grass frequently.
- Use a travel speed that fits the conditions:
  - Mow tall or wet grass twice. Cut grass at half desired height – then cut at desired height.
  - Travel slow when mowing tall or thick grass.
  - Avoid damaging grass by slipping or skidding machine drive wheels. Practice smooth control lever movements.
  - When performing sharp turns, do not allow inside machine drive wheel to stop and twist on grass.

Service Intervals

Servicing Your Machine

IMPORTANT: Avoid damage! Operating in extreme conditions may require more frequent service intervals:

- **Engine components may become dirty or plugged when operating in extreme heat, dust or other severe conditions.**
- **Engine oil can degrade if machine is operated constantly at slow or low engine speeds or for frequent short periods of time.**

Please use the following timetables to perform routine maintenance on your machine.

Service Intervals

Break-In after 8 Hours

• Change engine oil.

• Change engine oil filter (if equipped).

Every 50 Hours or Annually

• Change engine oil.

• Change engine oil filter (if equipped).

• Lubricate mower deck spindles.

• Lubricate mower deck idler arm (62 in. deck)

Every 100 Hours or Annually

• Replace spark plugs.

• Replace air filter elements, both foam and paper.

• Replace fuel filter.

• Check mower belt.

• Sharpen / replace mower blades.

• Clean underside of deck.

• Check tire pressure.

• Clean engine cooling fins.

Every 200 Hours

• Check / adjust engine valve clearance. See your John Deere dealer for this service.

Service Lubrication

Grease

IMPORTANT: Avoid damage! Use recommended John Deere greases to avoid component failure and premature wear.

The recommended John Deere greases are effective within an average air temperature range of -29 to 135 degrees C (-20 to 275 degrees F).

If operating outside that temperature range, contact your Servicing dealer for a special-use grease.

The following greases are preferred:

• John Deere Multi-Purpose SD Polyurea Grease

• John Deere Multi-Purpose HD Lithium Complex Grease

If not using any of the preferred greases, be sure to use a general all-purpose grease with an NLGI grade No.2 rating.

Wet or high speed conditions may require use of a special-use grease. Contact your Servicing dealer for information.

Lubricating Mower Deck Spindles

NOTE: Removal of belt shields is not necessary to lubricate the spindles.

1. Remove rubber mat and mower deck foot plate.

2. Lubricate the mower deck spindles, as indicated.

42 in. Mower Deck

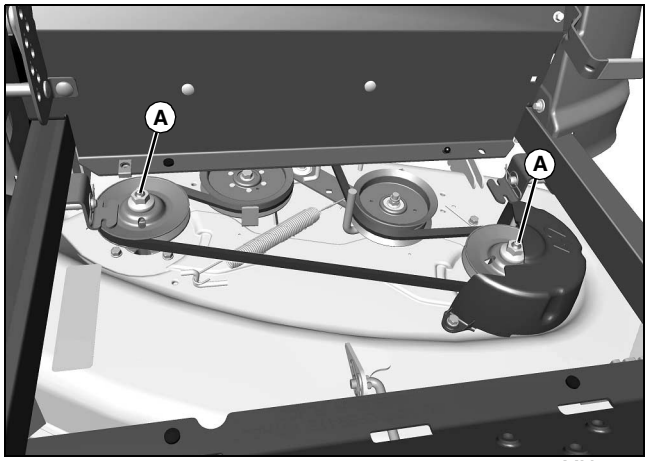

MX43836

• Lubricate two mower deck spindle grease fittings (A) with two pumps of grease at specified interval.

48 and 54 in. Mower Decks

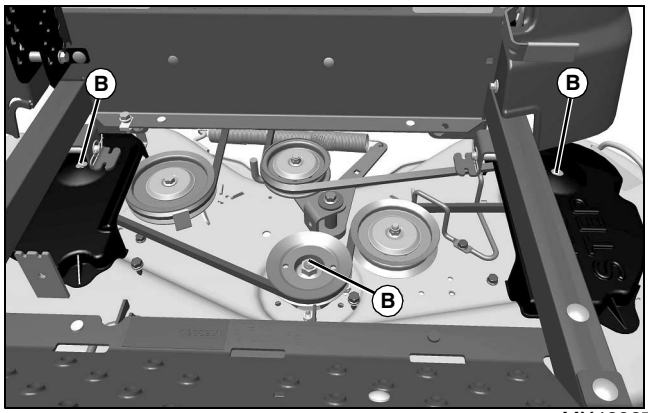

MX43837

Picture Note: Z425 with 48 in. deck shown.

• Lubricate three mower deck spindle grease fittings (B) with two pumps of grease at specified interval.

62 in. Mower Deck

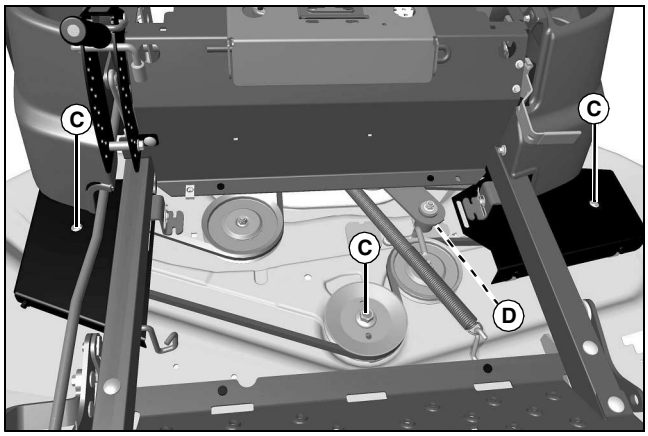

MX43838

• Lubricate three mower deck spindle grease fittings (C) and idler arm (D) with two pumps of grease at specified interval.

Lubricating Front Lift Arm

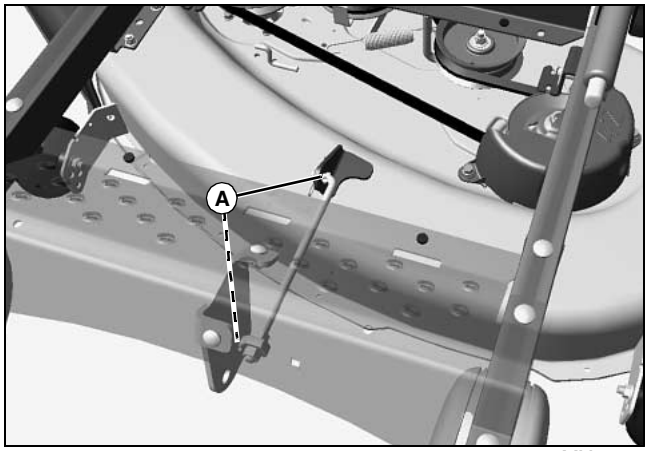

MX39747

Picture Note: Z225 42 in. deck shown.

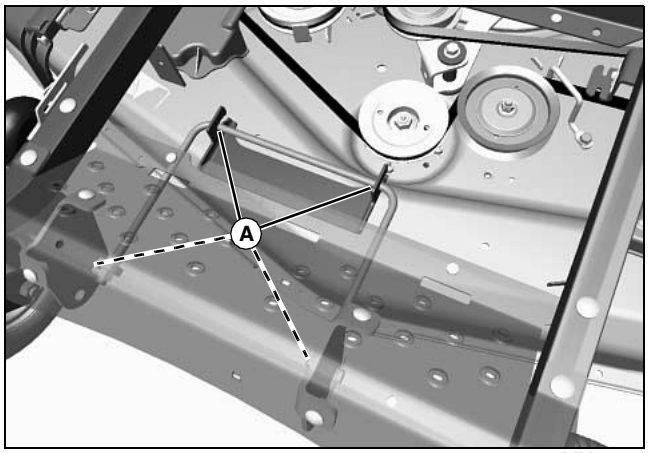

MX39718

Picture Note: Z400 series 48 in. deck shown.

Lubricate the front lift arm at the points (A) where it pivots in the mower deck bracket as needed to prevent or minimize squeaking during operation.

Lubricating Front Caster Spindles

CAUTION: Avoid injury! To avoid injury, Do not lubricate machine while the engine is running.

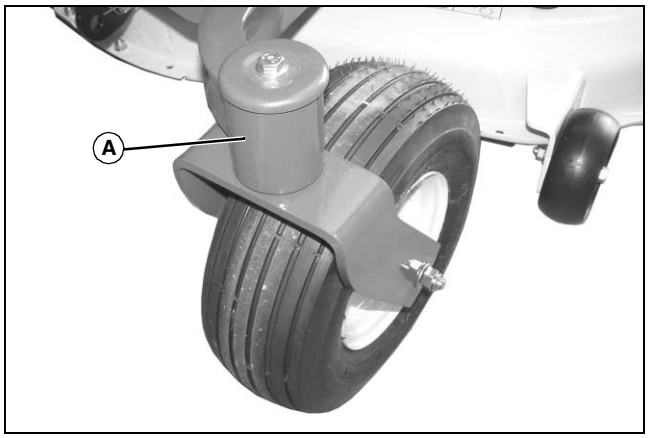

MX43678

• The two front caster wheel supports (A) utilize sealed bearings, which do not require lubrication. There are no grease fittings in the wheel supports.

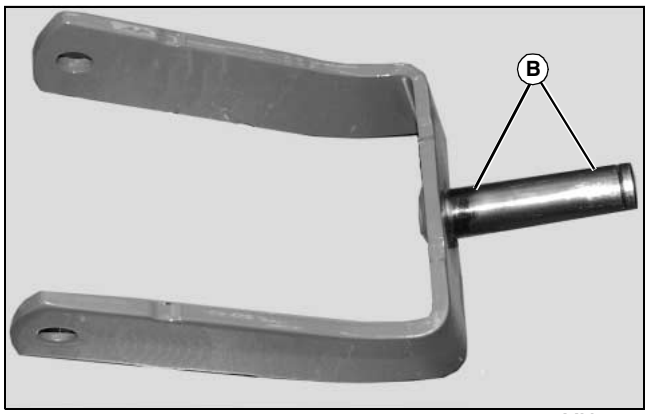

MX38582

• The caster wheel yoke spindle (B) should be lightly greased prior to assembly if the wheel unit is serviced, to prevent the spindle from seizing in the bearings.

Service Engine

Engine Warranty Maintenance Statement

Maintenance, repair, or replacement of the emission control devices and systems on this engine, which are being done at the customer's expense, may be performed by any non-road engine repair establishment or individual. Warranty repairs must be performed by an authorized John Deere dealer.

Avoid Fumes

CAUTION: Avoid injury! Engine exhaust fumes contain carbon monoxide and can cause serious illness or death.

Do not run an engine in an enclosed area, such as a garage, even with doors or windows opened.

Move the machine to an outside area before running the engine.

Engine Oil

Use oil viscosity based on the expected air temperature range during the period between oil changes.

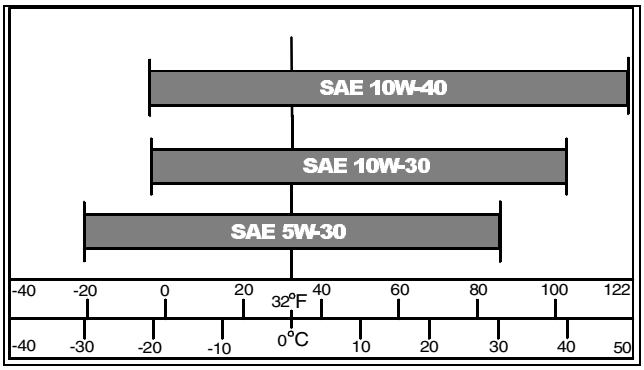

The following John Deere oils are preferred:

- TURF-GARD™
- PLUS- 4™

Other oils may be used if above John Deere oils are not available, provided they meet the following specification:

- API Service Classification SJ or higher

Checking Engine Oil Level

IMPORTANT: Avoid damage! Failure to check the oil level regularly could lead to serious engine problems if oil level is out of the operating range:

- **Check oil level before operating.**
- **Check oil level when the engine is cold and not running.**
- **Keep oil level between the dipstick marks.**
- **Shut off engine before adding oil.**

NOTE: Check oil twice a day if you run engine over 4 hours in a day.

Make sure engine is cold when checking engine oil level.

1. Park machine safely. (See Parking Safely in the SAFETY section.)

IMPORTANT: Avoid damage! Dirt and contamination can enter engine when checking oil level. Clean area around dipstick before loosening or removing.

2. Clean area around dipstick to prevent debris from falling into crankcase.

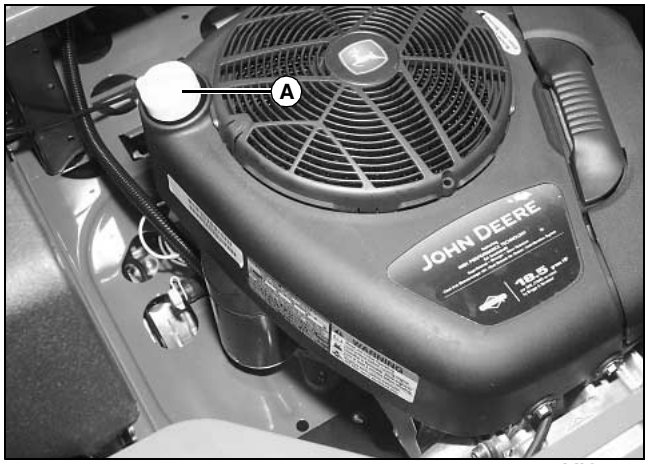

MX39807

Picture Note: Single cylinder Briggs and Stratton shown.

MX39802

Picture Note: Twin cylinder Briggs and Stratton shown.

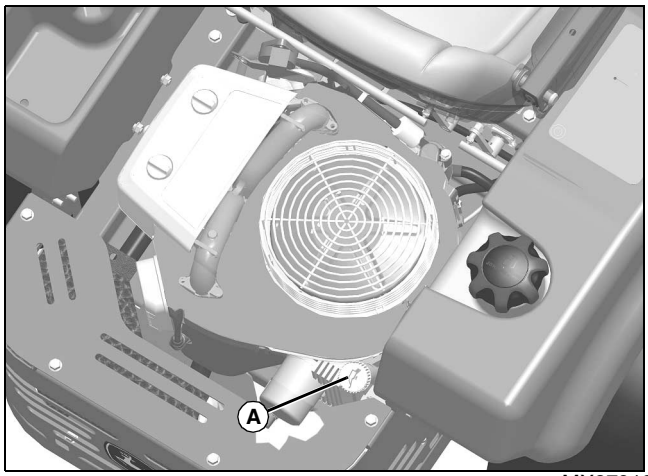

MX37910

Picture Note: Twin cylinder Kawasaki shown.

3. Remove dipstick (A). Wipe with clean cloth.
4. Install dipstick:

- Briggs and Stratton Engines: Install and tighten dipstick.
- Kawasaki Engines: Install dipstick in tube but do not tighten. Allow dipstick threads to rest on top of tube and rotate cap counterclockwise until it “clicks” or drops into place.

5. Remove dipstick.

6. Check oil level on dipstick. Oil must be between ADD and FULL marks.

7. If oil level is low, add oil to bring oil level no higher than FULL mark on dipstick. Do not overfill.

8. Install and tighten dipstick.

Changing Engine Oil and Filter

IMPORTANT: Avoid damage! Operating in extreme conditions may require more frequent service intervals:

• Engine components may become dirty or plugged when operating in extreme heat, dust or other severe conditions.

• Engine oil can degrade if machine is operated constantly at slow or low engine speeds or for frequent short periods of time.

1. Run engine to warm oil.

2. Park machine safely on level surface. (See Parking Safely in the SAFETY section.)

IMPORTANT: Avoid damage! Dirt and contamination can enter engine when checking oil level. Clean area around dipstick before loosening or removing.

3. Clean area around dipstick to prevent debris from falling into crankcase.

Single cylinder Briggs and Stratton:

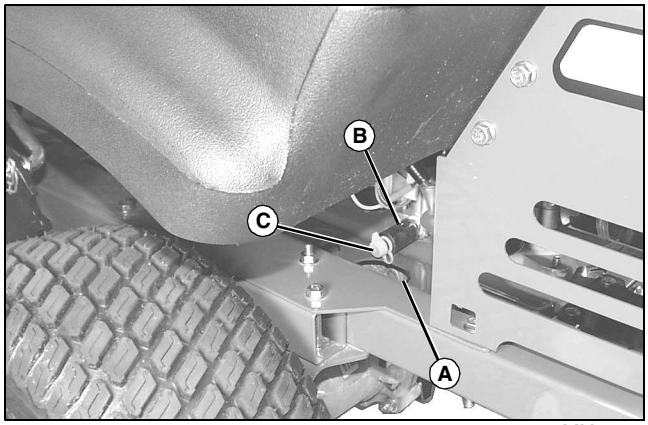

MX37942

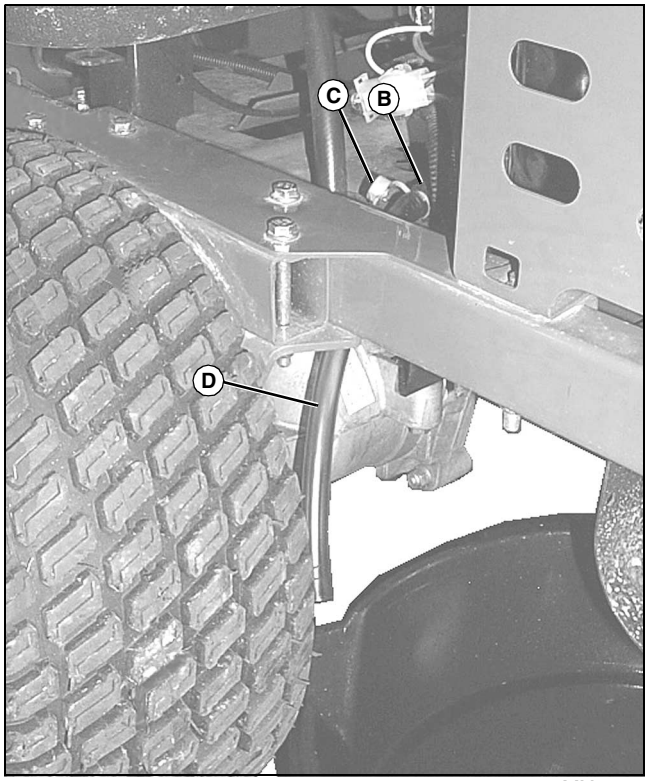

MX38113

1. Put drain pan under hole (A) of drain valve (B), and remove drain cap (C).

2. Install drain hose (D) onto end of drain valve. Loosen engine dipstick. Turn drain valve counterclockwise and pull outward to allow oil to drain completely.

3. Push drain valve inward, and turn clockwise to tighten. Remove drain hose, and install drain cap.

4. Add oil no higher than FULL mark on dipstick. Begin with approximately 1.2 L (1.25 qt). Do not overfill.

5. Install and tighten dipstick.

6. Start and run engine at idle to check for leaks. Stop engine. Fix any leaks before operating.

7. Check oil level. Add oil if necessary.

Twin cylinder Briggs and Stratton:

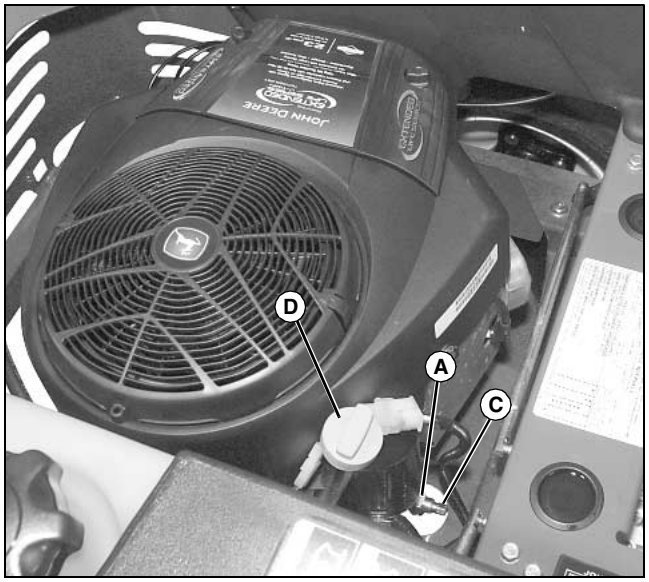

MX39802

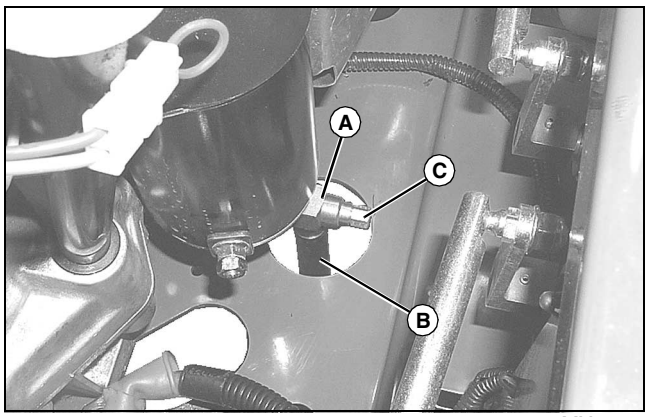

MX38114

1. Raise seat, and put drain pan under drain valve (A).

2. Install drain hose (B) onto bottom end of drain valve. Loosen fitting (C) to drain oil into drain pan.

3. Loosen dipstick (D), and allow oil to drain completely.

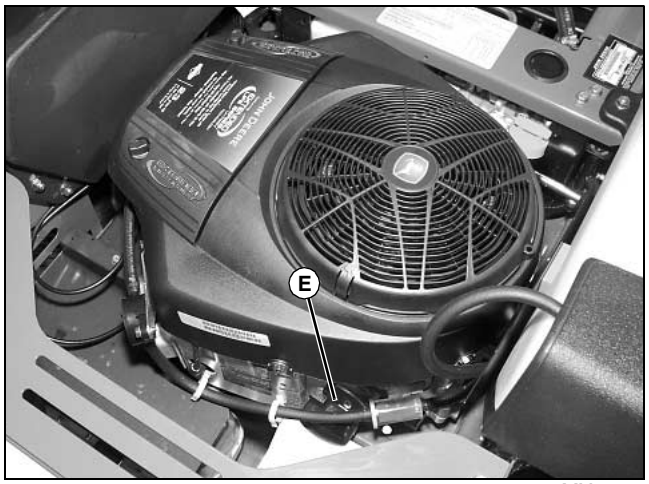

MX39803

4. Wipe dirt from around oil filter (E). Place a drain pan under oil filter, and remove old filter.

5. Put a light coat of fresh, clean oil on the new filter gasket.

6. Install replacement oil filter by turning oil filter to the right (clockwise) until the rubber gasket contacts filter base. Tighten filter an additional one-half turn.

7. Tighten oil drain fitting (C), and remove drain hose (B).

8. Add oil no higher than FULL mark on dipstick. Begin with approximately 1.6 L (1.75 qt). Do not overfill.

9. Install and tighten dipstick.

10. Start and run engine at idle to check for leaks. Stop engine. Fix any leaks before operating.

11. Check oil level. Add oil if necessary.

Twin cylinder Kawasaki:

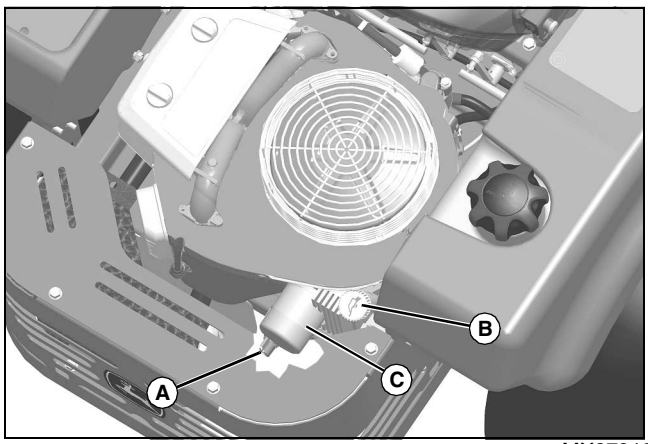

MX37910

1. Put drain pan under drain valve (A), and loosen drain valve to drain oil into drain pan.

2. Loosen dipstick (B), and allow oil to drain completely.

3. Wipe dirt from around oil filter (C). Place a drain pan under oil filter, and remove old filter.

4. Put a light coat of fresh, clean oil on the new filter gasket.

5. Install replacement oil filter by turning oil filter to the right (clockwise) until the rubber gasket contacts filter base. Tighten filter an additional one-half turn.

6. Tighten oil drain valve (A).

7. Add oil no higher than FULL mark on dipstick. Begin with approximately 1.5 L (1.6 qt). Do not overfill.

8. Install and tighten dipstick.

9. Start and run engine at idle to check for leaks. Stop engine. Fix any leaks before operating.

10. Check oil level. Add oil if necessary.

Cleaning Air Intake Screen and Engine Fins

CAUTION: Avoid injury! Compressed air can cause debris to fly a long distance.

- **Clear work area of bystanders.**
- **Wear eye protection when using compressed air for cleaning purposes.**
- **Reduce compressed air pressure to 210 kPa (30 psi).**

IMPORTANT: Avoid damage! An obstructed air intake screen can cause engine damage due to overheating. Keep air intake screen and other external surfaces of the engine, including cooling fins, clean at all times to allow adequate air intake.

1. Park machine safely. (See Parking Safely in the SAFETY Section.)

2. Clean air intake screen on top of engine and external surfaces with rag, brush, vacuum or compressed air.

Checking and Cleaning Air Cleaner Elements (Single Cylinder Briggs & Stratton)

1. Park machine safely. (See Parking Safely in the SAFETY section.)

2. Let engine cool.

3. Clean dirt and debris from the air cleaner cover.

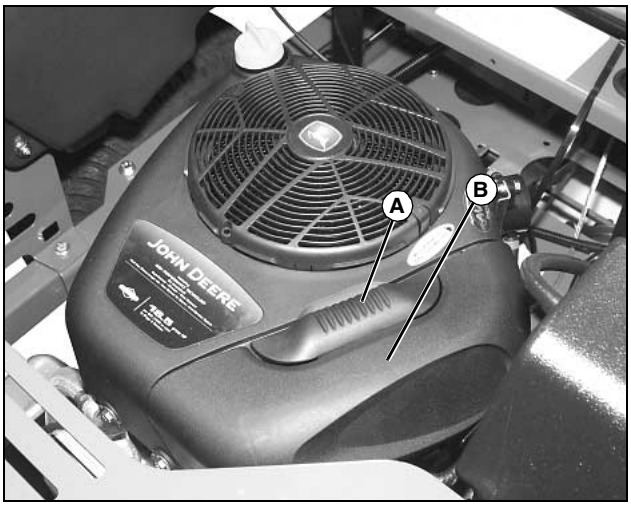

MX39804

4. Lift latch (A) to unlock cover (B). Lift cover forward and remove.

IMPORTANT: Avoid damage! Dirt and debris can enter the engine through a damaged filter element:

- **Do not wash paper element.**
- **Do not attempt to clean paper element by tapping against another object.**
- **Do not use pressurized air to clean element.**
- **Replace element only if it is very dirty, damaged or the seal is cracked.**

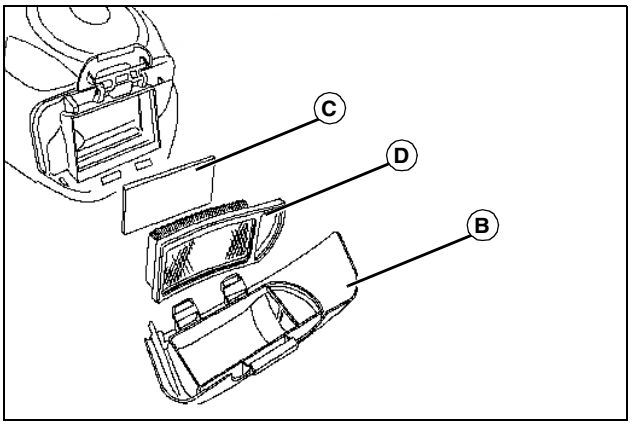

MX7679

5. Inspect the foam precleaner (C) without removing it. If the foam precleaner is dirty:

   a. Remove it from the filter carefully, leaving the paper element (D) in the air cleaner housing.

   b. Wash precleaner in a solution of warm water and liquid detergent. Do not use oil.

   c. Rinse precleaner thoroughly. Squeeze out excess water in a dry cloth until precleaner is completely dry.

6. Inspect the paper filter element (D) without removing it. If the paper filter element is damaged or dirty:

   - Carefully remove the element from the air cleaner housing.

7. Clean air cleaner base very carefully, preventing any dirt from falling into carburetor.

8. Install new paper filter element.

9. Install foam precleaner on paper filter element.

10. Install air cleaner cover and push latch down to lock.

Checking and Cleaning Air Cleaner Elements (Twin Cylinder Briggs & Stratton)

1. Park machine safely. (See Parking Safely in the SAFETY section.)

2. Let engine cool.

3. Clean dirt and debris from the air cleaner cover.

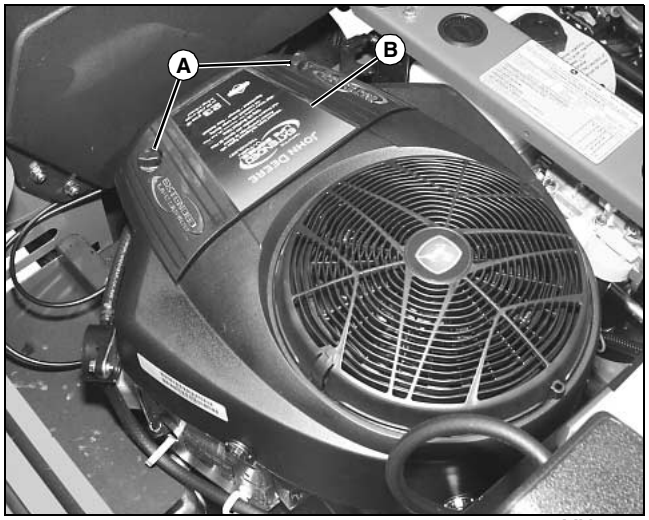

MX39805

4. Loosen two knobs (A) and remove cover (B).

IMPORTANT: Avoid damage! To prevent engine damage, do not allow any foreign objects to fall into the carburetor air intake.

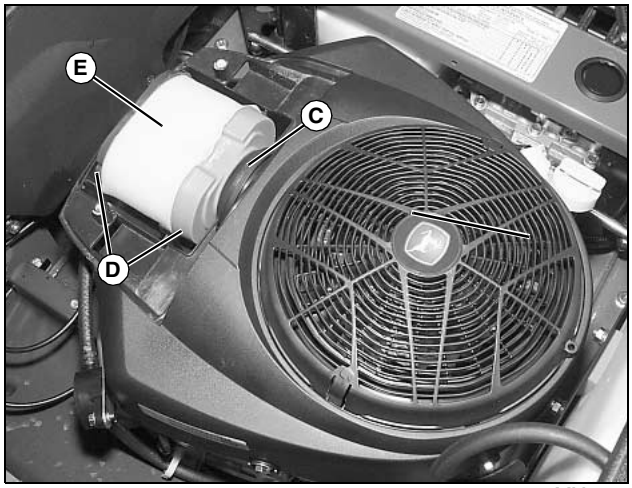

MX39806

5. Do not drop anything into the carburetor air intake (C). If anything falls into the carburetor air intake it must be removed.

6. Lift out filter cartridge (D) and inspect it for damage.

IMPORTANT: Avoid damage! Dirt and debris can enter the engine through a damaged filter element:

- **Do not wash paper element.**
- **Do not attempt to clean paper element by tapping against another object.**
- **Do not use pressurized air to clean element.**
- **Replace element only if it is very dirty, damaged or the seal is cracked.**

7. Inspect the foam precleaner (E) without removing it. If the foam precleaner is dirty:

a. Remove it from the filter carefully.

b. Wash precleaner in a solution of warm water and liquid detergent.

c. Rinse precleaner thoroughly. Squeeze out excess water in a dry cloth until precleaner is completely dry.

8. Clean air cleaner housing carefully. Prevent any dirt from falling into carburetor.

9. Install foam precleaner mesh side up.

10. Install cartridge. Make sure cartridge and seal are properly seated and sealing the carburetor air intake area.

11. Install air cleaner cover and tighten knobs. Do not overtighten.

Checking and Cleaning Air Cleaner Elements (Twin Cylinder Kawasaki)

1. Park machine safely (See Parking Safely in the SAFETY section).

2. Let engine cool.

3. Clean dirt and debris from the air cleaner cover.

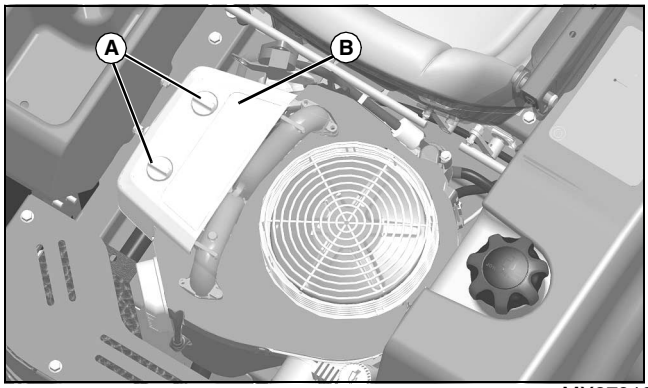

MX37910

4. Loosen two knobs (A) and remove cover (B).

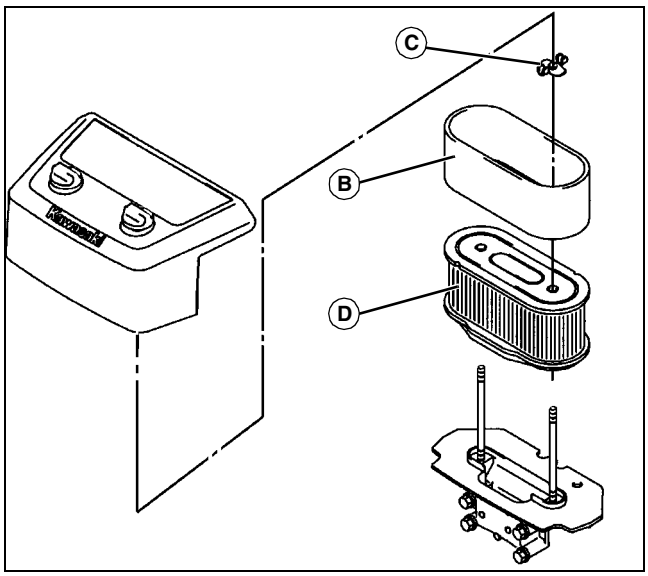

MX37945

5. Inspect the foam precleaner (B) without removing it.

6. If the foam precleaner is dirty:

- Remove the filter carefully.
- Wash precleaner in a solution of warm water and liquid detergent.
- Rinse precleaner thoroughly. Squeeze out excess water in a dry cloth until precleaner is completely dry.

IMPORTANT: Avoid damage! Dirt and debris can enter the engine through a damaged filter element:

- **Do not wash paper element.**
- **Do not attempt to clean paper element by tapping against another object.**
- **Do not use pressurized air to clean element.**
- **Replace element only if it is very dirty, damaged or the seal is cracked.**

7. Remove foam precleaner (B), wing nuts (C), and paper element (D). Inspect paper element.

8. If the paper filter element is damaged or dirty, replace filter.

9. Clean air cleaner base very carefully, preventing any dirt from falling into carburetor.

10. Install foam precleaner (B) onto paper filter element (D). Install paper element onto carburetor base, and secure with two wing nuts (C). Install air cleaner cover and tighten wing nuts.

Checking Spark Plug

CAUTION: Avoid injury! Touching hot surfaces can burn skin. The engine, components, and fluids will be hot if the engine has been running. Allow the engine to cool before servicing or working near the engine and components.

1. Park machine safely (See Parking Safely in the SAFETY section).

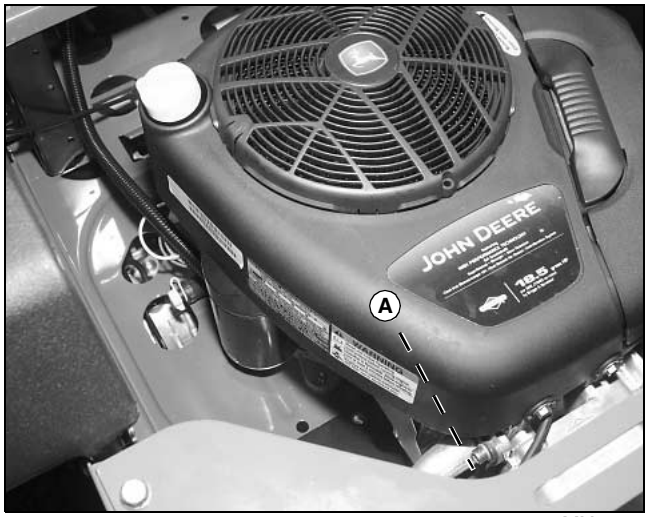

MX39807

Picture Note: Single cylinder Briggs and Stratton shown.

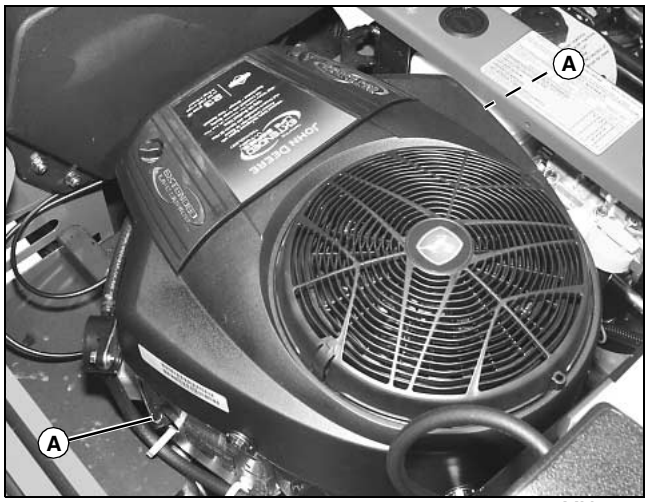

MX39805

Picture Note: Twin cylinder Briggs and Stratton shown.

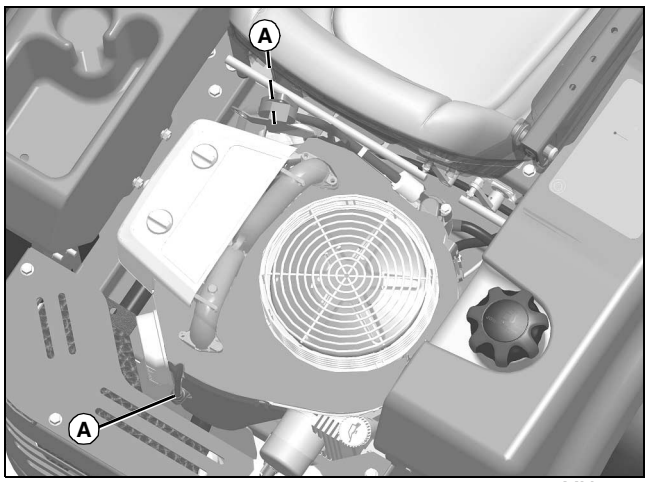

MX37910

Picture Note: Twin cylinder Kawasaki shown.

2. Disconnect spark plug wire (A). For the twin cylinder engines, there is one on each side of engine.

3. Remove each spark plug.

4. Clean spark plug carefully with a wire brush.

5. Inspect spark plug for:

- Cracked porcelain.
- Pitted or damaged electrodes.
- Other wear or damage.

NOTE: In Canada, replace spark plug with resistor plug only.

6. Replace spark plugs as necessary.

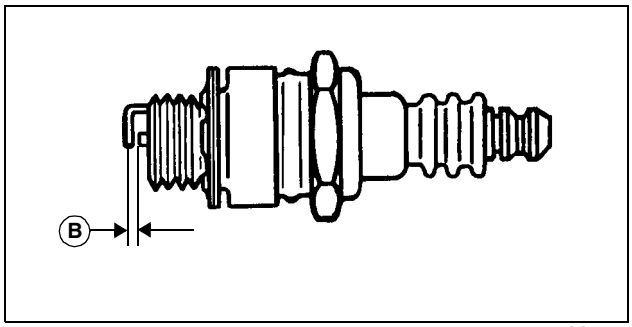

M85200

7. Check plug gap (B) with a wire feeler gauge. To change gap, move the outer electrode. Gap must be 0.75 mm (0.030 in.).

8. Install spark plugs and tighten to 20 N•m (180 lb-in.).

9. Connect spark plug wire(s).

Adjusting Carburetor

NOTE: Carburetor is calibrated by the engine manufacturer and is not adjustable.

If engine is operated at altitudes above 1006 m (3,300 ft), some carburetors may require a special high altitude main jet. See your authorized dealer.

If engine is hard to start or runs rough, check the TROUBLESHOOTING section of this manual.

Possible engine surging will occur at high throttle with transmission in “N” neutral and mower engagement lever disengaged. This is a normal condition due to the emission control system.

After performing the checks in the troubleshooting section and your engine is still not performing correctly, contact your authorized dealer.

Replacing Fuel Filter

CAUTION: Avoid injury! Fuel vapors are explosive and flammable:

- **Do not smoke while handling fuel.**
- **Keep fuel away from flames or sparks.**
- **Shut off engine before servicing.**
- **Cool engine before servicing.**
- **Work in a well-ventilated area.**
- **Clean up spilled fuel immediately.**

NOTE: Change filter when fuel is low.

1. Park machine safely. (See Parking Safely in the SAFETY section).

2. Let engine cool.

3. Raise operator’s seat.

4. Put a drain pan under fuel filter.

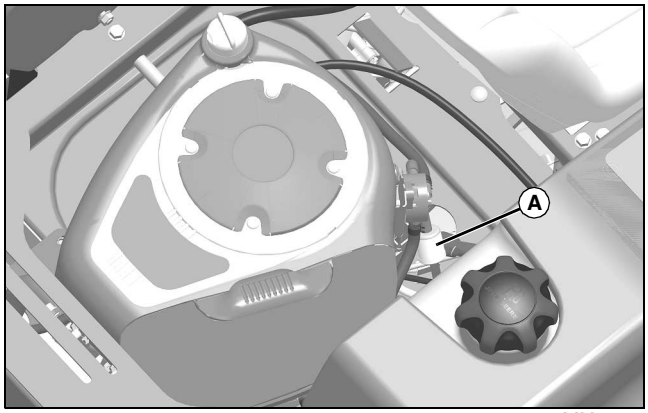

MX37908

Picture Note: Single cylinder Briggs and Stratton shown.

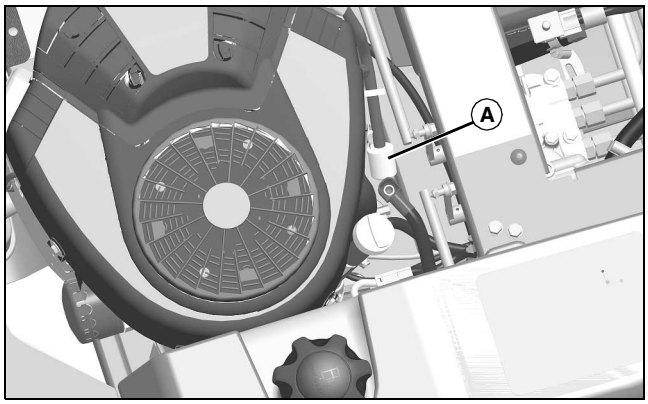

MX37909

Picture Note: Twin cylinder Briggs and Stratton shown.

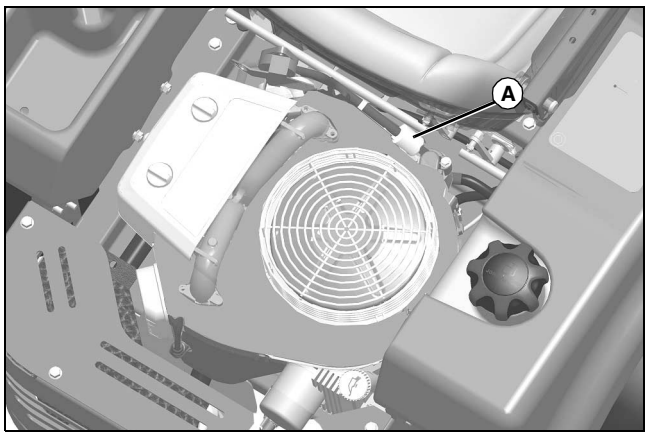

MX37910

Picture Note: Twin cylinder Kawasaki shown.

5. Slide hose clamps on both sides of fuel filter (A) away from fuel filter ends using pliers.

6. Disconnect hoses from filter.

IMPORTANT: Avoid damage! Incorrect installation of fuel filter may cause engine damage. Install the filter with the arrow pointing in the direction of fuel flow (towards the engine) for proper operation.

7. Connect hoses to new filter making sure the filter arrow is pointing in the direction of the fuel flow.

8. Install clamps and check for leaks.

Cleaning Engine Screen Guard

The Briggs and Stratton single and twin cylinder engines incorporate a removable guard over the rotating flywheel cover at the top of the engine. The guard should be removed to check for and remove any debris daily in conjuction with checking engine oil level.

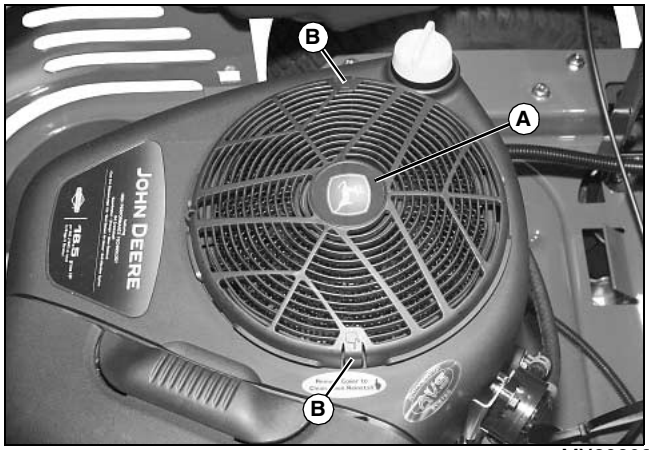

MX39808

1. Locate rotating screen guard (A) at top of engine, and the two retaining tabs (B), embossed with a finger symbol.

MX39809

2. Push in on the two retaining tabs and lift off guard (A).

3. Clean guard and flywheel cover of debris.

4. Re-install guard after cleaning.

Service Transmission

Checking Transmission (Z225 and Z245)

The Z225 and Z245 transmission is a sealed component. No maintenance is required on this transmission. If you suspect any transmission problems, please contact your authorized dealer.

Transmission Oil (Z425, Z445 and Z465)

NOTE: Machine is filled with John Deere Low Viscosity HY-GARD® (J20D) transmission oil at the factory. Do not mix oils.

Use only Low Viscosity HY-GARD® (J20D) transmission oil. DO NOT use type “F” automatic transmission fluid.

IMPORTANT: Avoid damage! Use John Deere Low Viscosity HY-GARD® (J20D) transmission oil to reduce transmission noise and to increase response time for the hydraulics and power steering.

- **Do not drain or change hydrostatic transmission fluid.**
- **See your John Deere dealer for service.**

John Deere Low Viscosity HY-GARD® (J20D) transmission oil is specially formulated to provide maximum protection against mechanical wear, corrosion, and foaming. It may be used in all operating temperatures.

Checking Transaxle Oil Level (Z425, Z445 and Z465)

NOTE: On Z225 and Z245 models, the transaxle is a sealed component. No maintenance is required on this transaxle. If you suspect any transmission problems, please contact your authorized dealer.

1. Park machine safely on a level surface. (See Parking Safely in the SAFETY section.)

IMPORTANT: Avoid damage! Hot hydraulic oil will expand and show incorrect oil level. Check oil level:

- **When oil is cold.**
- **With engine not running.**

2. Allow machine to cool.

3. Raise operator’s seat.

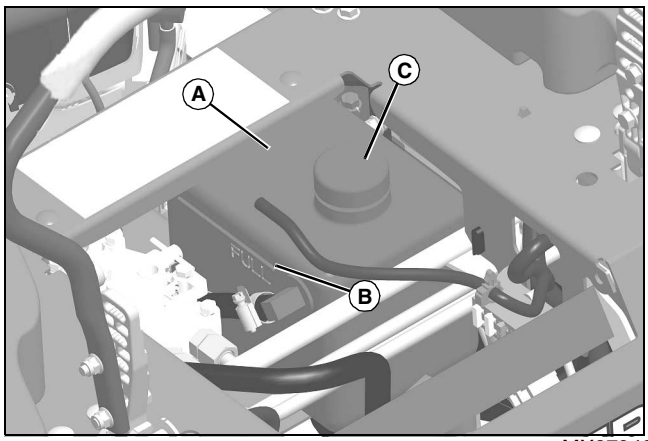

MX37940

4. Locate transaxle oil reservoir (A) at rear of machine. Reservoir is marked FULL (B).

IMPORTANT: Avoid damage! Contamination can damage the hydraulic system. Clean thoroughly around reservoir fill cap before opening.

5. If oil level is low, clean area around reservoir cap (C).

6. Remove cap.

7. Add John Deere Low Viscosity HY-GARD™ (J20D) until oil level is at FULL mark on reservoir.

8. Install cap.

9. Start engine.

10. Operate machine forward and in reverse several times.

11. Park machine safely on a level surface. (See Parking Safely in the SAFETY section.)

12. Wait at least 3 minutes for hydraulic oil to cool.

13. Check oil level again. Add oil if necessary.

Changing Transaxle Oil and Filter (Z425, Z445 and Z465)

NOTE: Z225 and Z245 models: The transaxle is a sealed component. No maintenance is required on this transaxle. If you suspect any transmission problems, please contact your authorized dealer.

Z425, Z445 and Z465 models: Changing transaxle oil and filter is not required as a regular service interval and should not be changed unless servicing other components.

1. Park machine safely on a level surface. (See Parking Safely in the SAFETY section.)

IMPORTANT: Avoid damage! Contamination can damage the hydraulic system. Clean thoroughly around reservoir fill cap before opening.

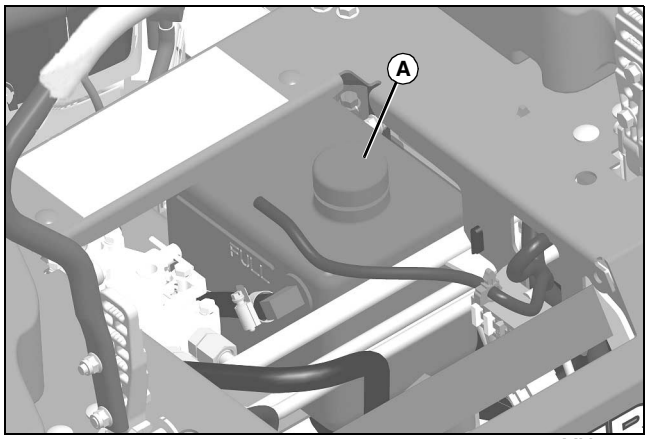

MX37940

2. Raise operator's seat, and clean area around reservoir cap (A). Remove cap.

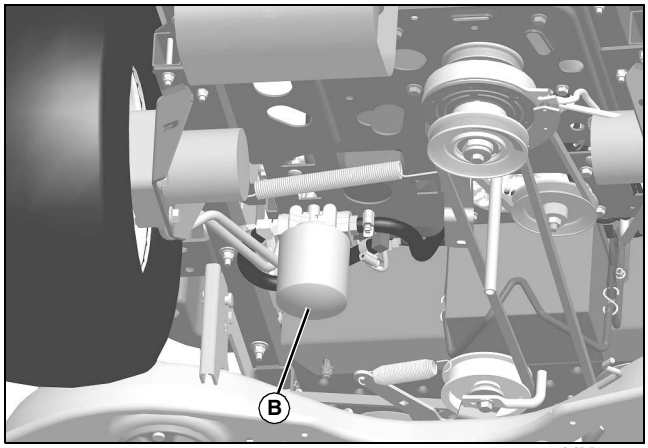

MX37944

Picture Note: View from rear of machine.

3. Clean area around hydraulic oil filter (B).

4. Place drain pan with at least a 9.9 L (10.5 qt) capacity under hydraulic oil filter, turn filter counterclockwise to remove and allow oil to drain completely.

5. Apply a film of clean oil on gasket of new filter.

6. Install filter. Turn filter clockwise until gasket makes contact with the mounting surface. Tighten 1/2 to 3/4 turn after gasket contact.

NOTE: Reservoir capacity is approximately 8.5 L (9 qt). Total system capacity with filter is approximately 9.9 L (10.5 qt).

7. Fill oil reservoir with approximately 8.5 L (9 qt) of oil.

8. Install reservoir cap.

9. Start engine.

10. Move throttle lever to the 3/4 fast idle position.

11. Unlock park brake.

12. Run engine in full forward position for five minutes and then cycle motion control levers forward and rearward several times. Check for leaks around filter.

13. Stop the engine. Check oil level in reservoir. Add oil as necessary.

Checking and Adjusting Neutral Creep

Check neutral creep with engine running, motion control levers in the start/shutdown position, park brake off, and machine on level ground.

If the machine creeps forward or reverse while motion control levers are in the start/shutdown position, adjust the motion control lever linkages:

1. Park machine safely. (See Parking Safely in the SAFETY section.)

2. Raise seat.

Z225 and Z245

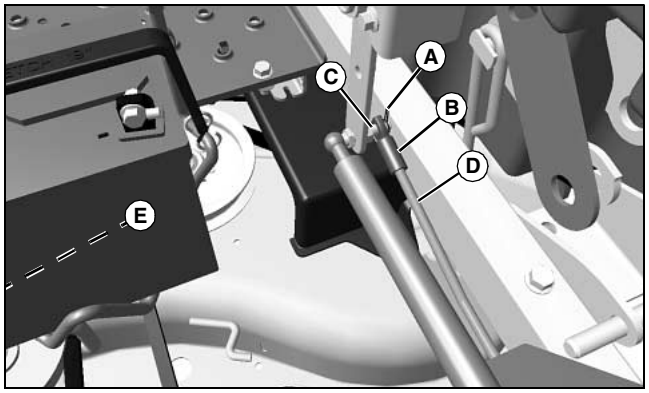

MX39621

Picture Note: Right side components shown.

• Remove spring locking clip (A) on rod end (B), then remove rod end from pivot pin (C). Turn rod end on rod (D) in (clockwise) to decrease forward creep and out (counterclockwise) to decrease reverse creep. Repeat procedure, as necessary, on opposite side (E). Install rod ends back onto arms and secure with spring locking clips.

Z425, Z445 and Z465

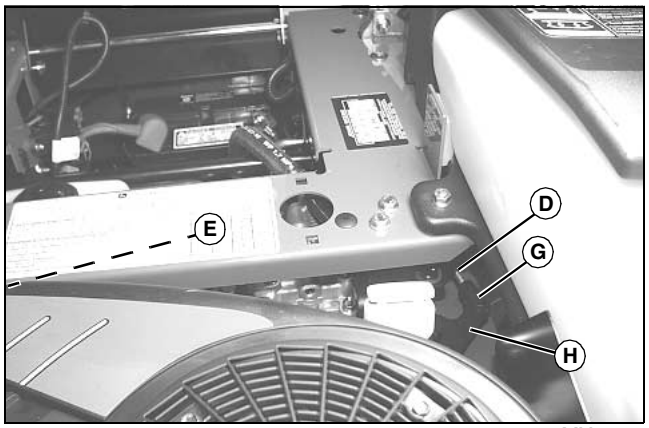

MX38110

Picture Note: Z425 shown. Z445 and Z465 similar.

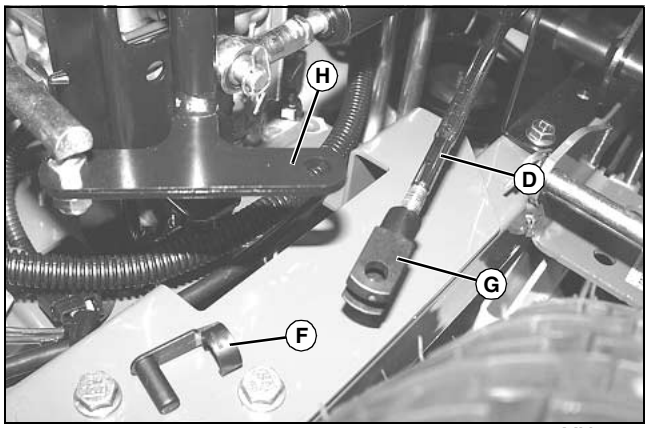

MX38118

Picture Note: Closeup of Z445 shown.

• Remove locking pin (F) on yoke end (G), then remove yoke end from arm (H). Turn black yoke end on rod (D) in (clockwise) to decrease forward creep and out (counterclockwise) to decrease reverse creep. Repeat procedure, as necessary, on opposite side (E). Install yoke ends back onto arms and secure with locking pin.

Adjusting Tracking

If the machine does not track in a straight line while going in full forward position, adjust the tracking:

NOTE: Use the 13 mm wrench (A) on one end of the deck height pin for adjusting the tracking bolts.

1. Park machine safely. (See Parking Safely in the SAFETY section.)

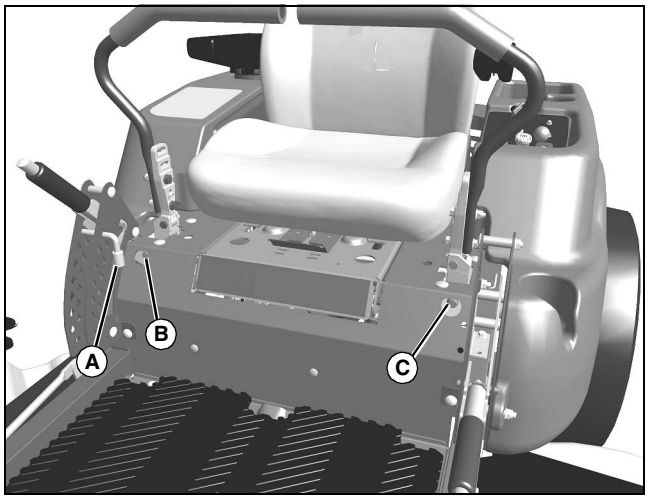

MX40979

2. Adjust tracking:

NOTE: Tracking bolts limit top forward speed. If both levers hit against the tracking bolts, turn both bolts counterclockwise equal amounts until only one bolt contacts the lever. This will achieve maximum forward speed.

- If machine tracks to the left, turn tracking bolt (B) clockwise.
- If machine tracks to the right, turn tracking bolt (C) clockwise.

Cleaning Transaxle Cooling Fans (Z225)

CAUTION: Avoid injury! Compressed air can cause debris to fly a long distance.

- **Clear work area of bystanders.**
- **Wear eye protection when using compressed air for cleaning purposes.**
- **Reduce compressed air pressure to 210 kPa (30 psi).**

IMPORTANT: Avoid damage! To ensure proper cooling, keep the transaxle cooling fins and surrounding area clean at all times. Operating the transaxle with obstructed cooling fins could cause damage due to overheating.

1. Park machine safely. (See Parking Safely in the SAFETY section.)

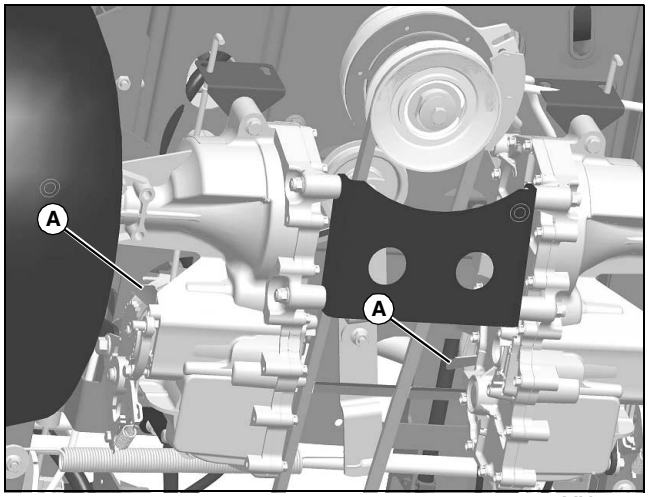

MX37947

Picture Note: View from rear of machine.

2. Clean transaxle fan fins (A) and around exterior of each fan with a rag, brush, or compressed air.

Checking and Replacing Transaxle Drive Belt (Z225 and Z245)

CAUTION: Avoid injury! Entanglement in a belt or sheave can cause serious injury. Stop engine and wait for all moving parts to stop.

NOTE: The transmission drive belt is self-adjusted using a spring tensioner and does not require a tension adjustment.

Checking Belt:

1. Park machine safely. (See Parking Safely in the SAFETY section.)

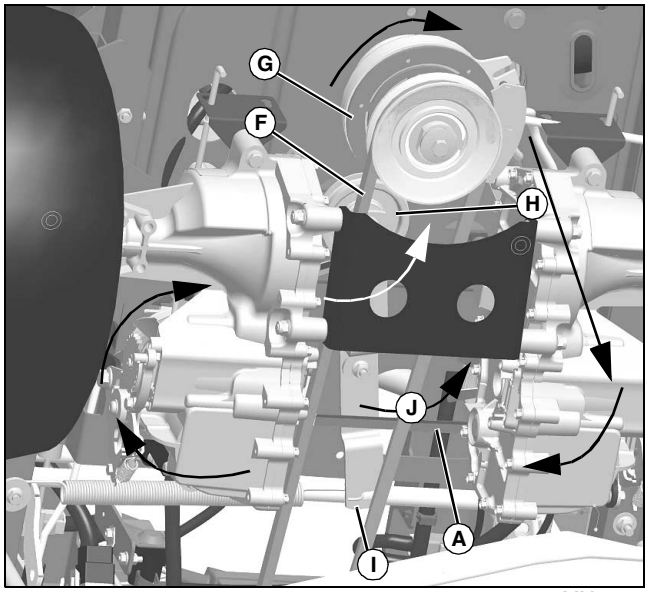

MX37947

Picture Note: View from rear of machine.

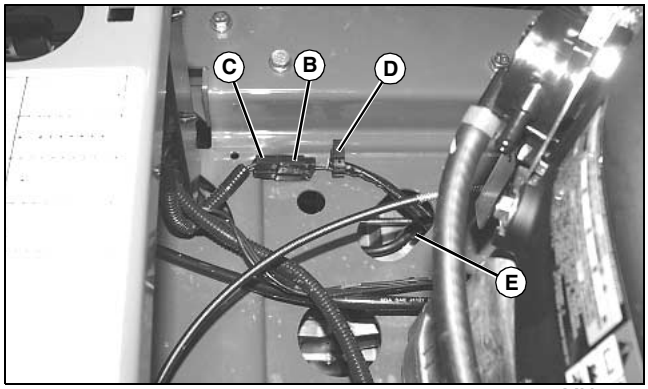

MX38116

2. Inspect drive belt (A) for excessive wear, damage or stretching while in position on the engine sheave, transmission sheaves, and drive belt tensioner sheave.

Replacing Belt:

1. Disconnect electric clutch wiring connector (B) from main wiring harness connector (C).

2. Remove clutch wiring harness from retaining clip (D), and lower harness and connector (C) through hole (E).

CAUTION: Avoid injury! Components are installed under spring tension. Wear eye protection and use proper tools when installing and removing components with spring tension.

3. Remove mower deck drive belt (F). (See Replacing Mower Deck Drive Belt in the SERVICE MOWER section.)

4. Remove drive belt (A) from engine sheave (G), transmission sheaves and idler sheave (H).

- To make removal and installation of the belt easier, carefully rotate the spring loaded idler (I) counterclockwise (J), and remove belt.

5. Install belt onto engine sheave, transmission sheaves and idler sheave as shown by arrows.

6. Install mower deck drive belt.

7. Install electric clutch wiring harness back through frame hole and connect to main wiring harness. Secure harness onto frame with retaining clip.

Checking and Replacing Pump Drive Belt (Z425, Z445 and Z465)

CAUTION: Avoid injury! Entanglement in a belt or sheave can cause serious injury. Stop engine and wait for all moving parts to stop.

NOTE: The transmission drive belt is self-adjusted using a spring tensioner and does not require a tension adjustment.

Checking Belt:

1. Park machine safely. (See Parking Safely in the SAFETY section.)

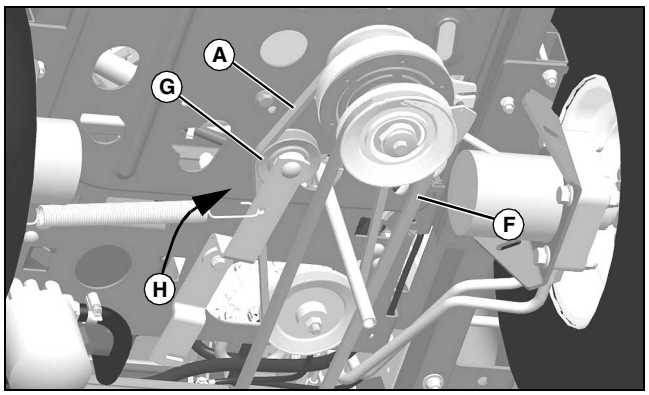

MX37946

Picture Note: View from rear of machine.

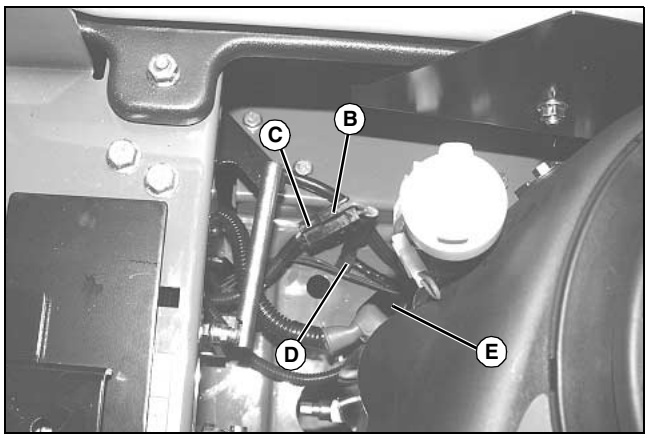

MX38117

2. Inspect belt (A) for excessive wear, damage or stretching while in position on the transmission sheave and drive belt tensioner sheave.

Replacing Belt:

1. Disconnect electric clutch wiring connector (B) from main wiring harness connector (C).

2. Remove clutch wiring harness from retaining clip (D), and lower harness end through hole (E).

CAUTION: Avoid injury! Components are installed under spring tension. Wear eye protection and use proper tools when installing and removing components with spring tension.

3. Remove mower deck drive belt (F). (See Replacing Mower Deck Drive Belt in the SERVICE MOWER section.)

4. Remove drive belt (A) from drive sheaves and idler sheave.

- To make removal and installation of the belt easier, carefully rotate the spring loaded idler (G) clockwise (H), and remove belt.

5. Install drive belt onto drive sheaves and idler sheave as shown.

6. Install mower deck drive belt.

7. Install electric clutch wiring harness back through frame hole and connect to main wiring harness. Secure harness onto frame with retaining clip.

Service Mower

Removing and Installing Mower Deck Foot Plate

CAUTION: Avoid injury! Always operate the mower with the foot plate installed. Operating with the foot plate removed can cause serious injury.

Removing Foot Plate

1. Park machine safely. (See Parking Safely in the SAFETY section.)

2. Remove rubber mat from foot plate.

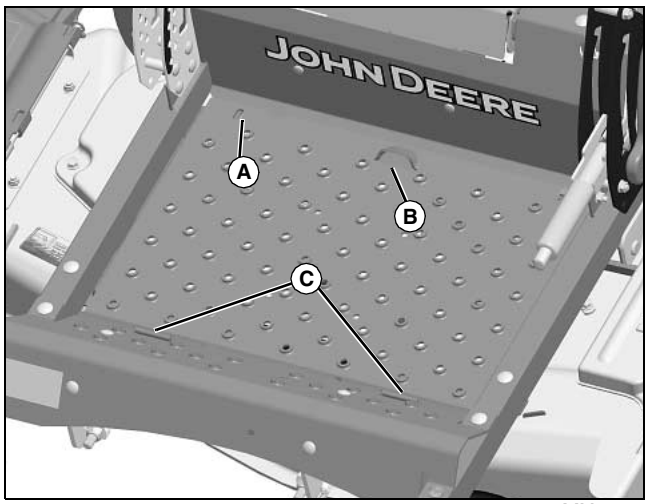

MX37794

3. Remove bolt (A).

4. Rotate foot plate up using finger pull (B).

5. Remove foot plate.

Installing Foot Plate

1. Place tabs (C) of foot plate into slots in frame.

2. Lower foot plate.

3. Install bolt (A) and place rubber mat on foot plate.

Removing Mower (42 Inch Mower)

1. Park machine safely. (See Parking Safely in the SAFETY section.)
2. Allow engine and muffler to cool completely.

CAUTION: Avoid injury! Rotating blades are dangerous. Before adjusting or servicing mower:

- **Disconnect spark plug wire(s) or battery negative (-) cable to prevent engine from starting accidently.**
- **Always wear gloves when handling mower blades or working near blades.**

3. Raise mower deck to the transport lock position.

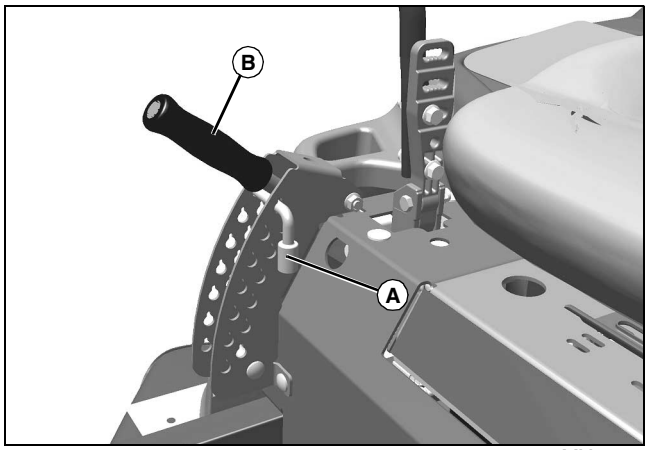

MX40976

4. Remove pin (A), lower mower deck, and install pin just above lever (B) to lock mower in lowered position.
5. Remove foot plate.

CAUTION: Avoid injury! Component is spring-assisted and under tension. Injury can occur if spring-assisted component is released suddenly.

6. Disconnect mower drive belt:

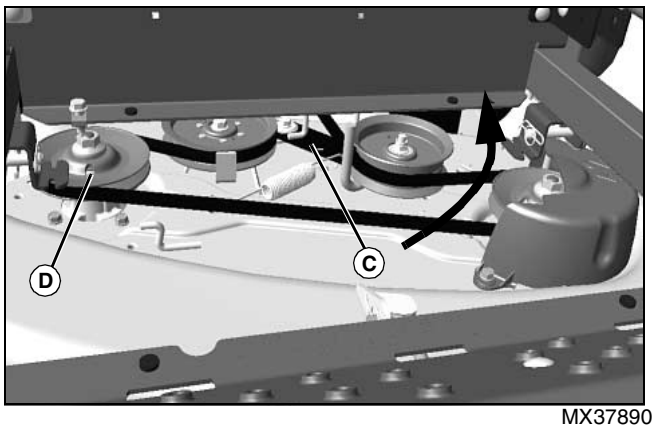

MX37890

- Install 3/8-inch ratchet onto square hole (C) in tension arm and rotate counterclockwise to release tension on belt, while removing mower belt from left spindle sheave (D).
- Remove belt from engine sheave.

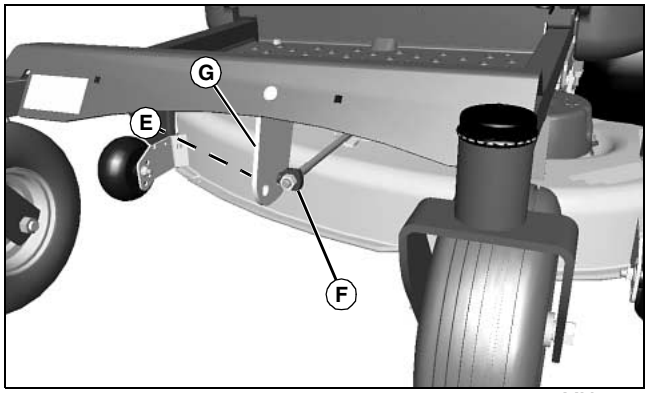

MX39626

7. Remove locking clip (E) and, remove stud end (F) from front draft bracket (G).

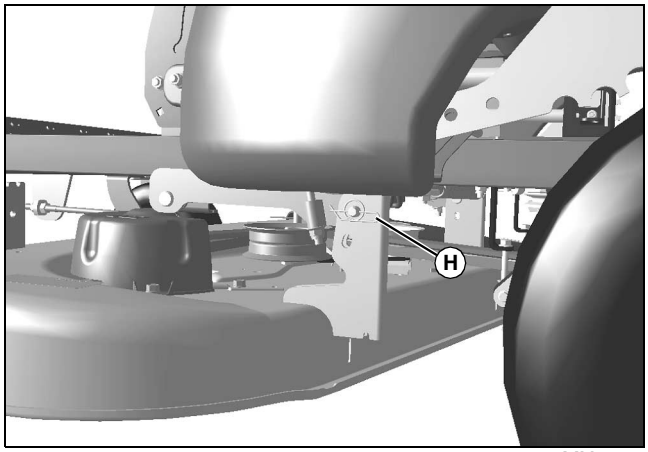

MX37773

8. Remove spring clip (H) and pin from each side of rear mower bracket.
9. Raise draft arms to transport lock position:
   a. Pull and raise mower lift lever fully upward.
   b. Install pin just below lift lever to lock into raised position.
10. Rotate front caster wheels to maximize clearance.
11. Slide mower out from under the machine.

Removing Mower (48 and 54 Inch Mowers)

1. Park machine safely. (See Parking Safely in the SAFETY section.)
2. Allow engine and muffler to cool completely.

CAUTION: Avoid injury! Rotating blades are dangerous. Before adjusting or servicing mower:

- **Disconnect spark plug wire(s) or battery negative (-) cable to prevent engine from starting accidently.**
- **Always wear gloves when handling mower blades or working near blades.**

3. Raise mower deck to the transport lock position.

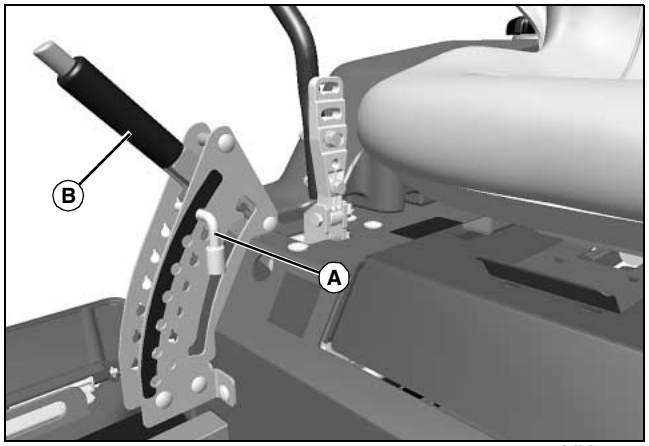

MX39555

4. Remove pin (A), lower mower deck, and install pin just above lever (B) to lock mower in lowered position.

5. Remove foot plate.

CAUTION: Avoid injury! Component is spring-assisted and under tension. Injury can occur if spring-assisted component is released suddenly.

6. Disconnect mower drive belt:

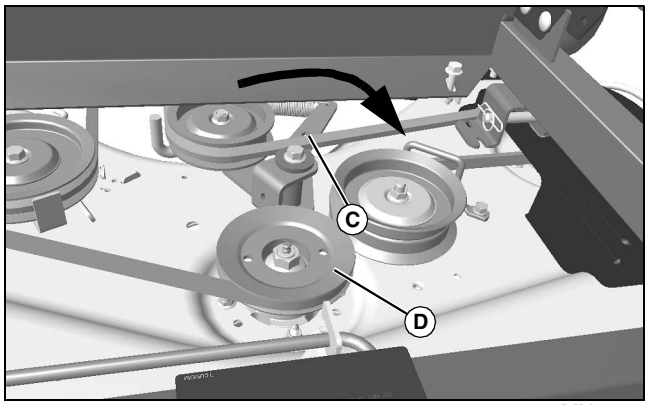

MX37889

Picture Note: 48 inch mower deck shown.

- Install 3/8-inch ratchet onto square hole (C) in tension arm and rotate clockwise to release tension on belt, while removing mower belt from center spindle sheave (D).
- Remove belt from engine sheave.

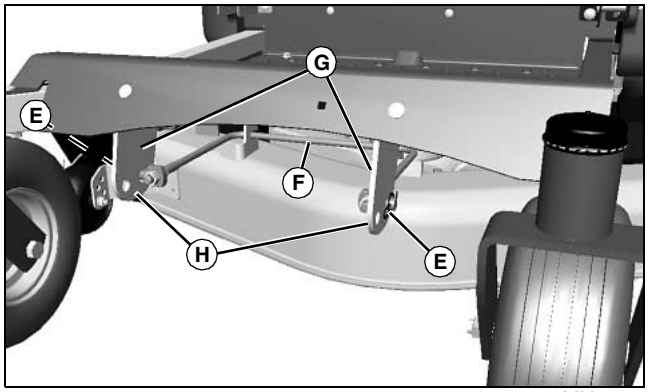

MX39628

Picture Note: 48 in. deck shown.

7. Remove locking clips (E), and remove front draft rod (F) from draft bracket (G) and mower deck bracket (H).

- Do not operate the machine without the mower deck: Machine may become unstable without the mower deck attached. Move machine only by hand. (See Moving Machine by Hand in OPERATING section.)

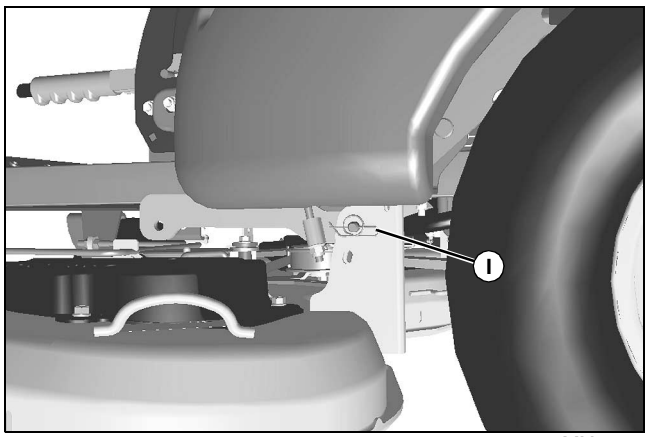

MX37891

Picture Note: 48 in. deck shown.

8. Remove spring clip (I) and pin from each side of rear mower bracket.

9. Raise draft arms to transport position:

   a. Pull and raise mower lift lever fully upward.

   b. Install pin just below lift lever to lock into raised position.

10. Rotate front caster wheels to maximize clearance.

11. Slide mower out from under the machine.

Removing Mower (Z445 54 Inch and Z465 62 Inch Mowers)

1. Park machine safely. (See Parking Safely in the SAFETY section.)

2. Allow engine and muffler to cool completely.

CAUTION: Avoid injury! Rotating blades are dangerous. Before adjusting or servicing mower:

- **Disconnect spark plug wire(s) or battery negative (-) cable to prevent engine from starting accidently.**
- **Always wear gloves when handling mower blades or working near blades.**

3. Raise mower deck to the transport lock position.

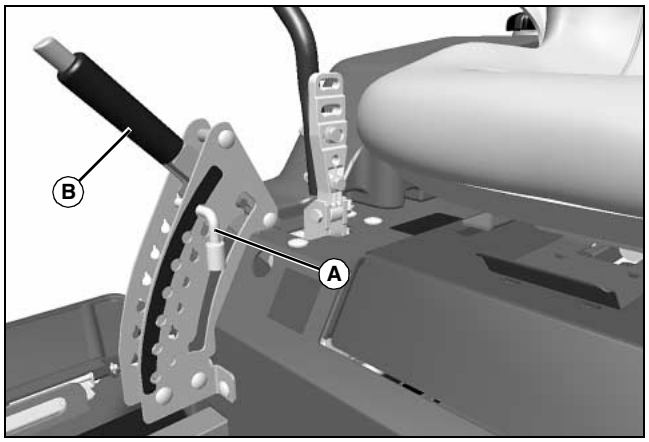

MX39555

4. Remove pin (A), lower mower deck, and install pin just above lever (B) to lock mower in lowered position.

5. Remove foot plate.

CAUTION: Avoid injury! Component is spring-assisted and under tension. Injury can occur if spring-assisted component is released suddenly.

6. Disconnect mower drive belt:

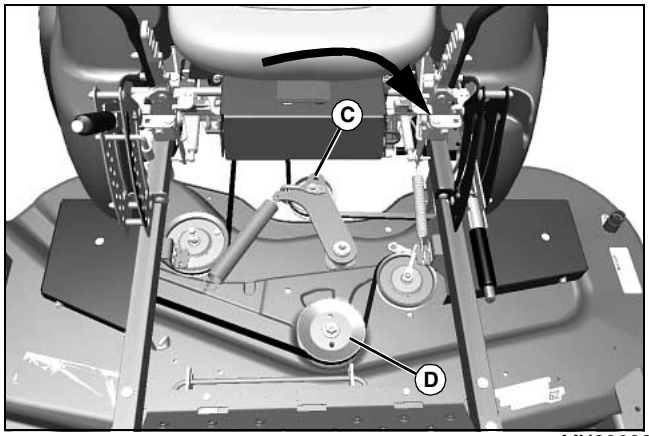

MX39623

Picture Note: 62 in. Deck Shown. (Some components not shown for clarity.)

- Install 3/8-inch ratchet into square hole (C) in tension arm and rotate clockwise to release tension on belt, while removing mower belt from center spindle sheave (D).
- Remove belt from engine sheave.

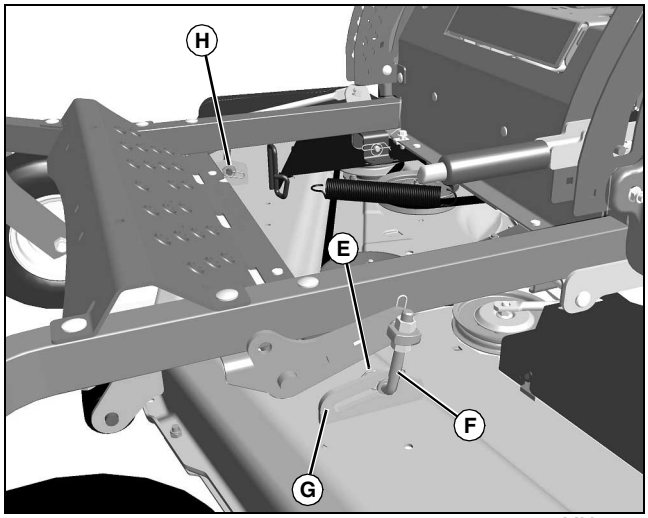

MX40978

7. Remove spring locking pin (E), and remove side draft rod (F) from mower draft bracket (G). Repeat on opposite side (H).

- Do not operate the machine without the mower deck: Machine may become unstable without the mower deck attached. Move machine only by hand. (See Moving Machine by Hand in OPERATING section.)

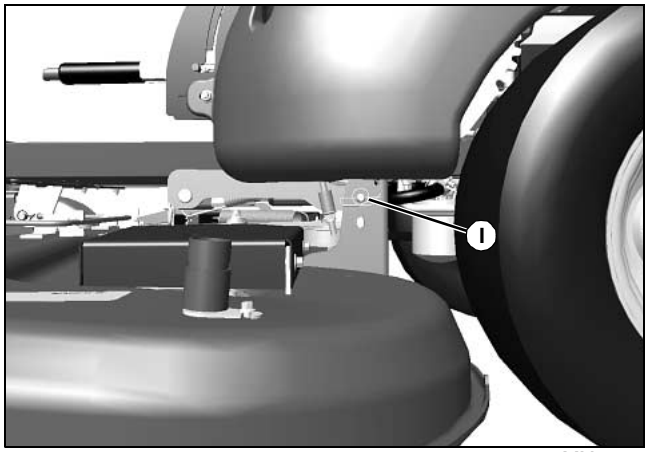

MX39625

8. Remove spring clip (I) and pin from each side of rear mower bracket.

9. Raise draft arms to transport position:

   a. Pull and raise mower lift lever fully upward.

   b. Install pin just below lift lever to lock into raised position.

10. Rotate front caster wheels to maximize clearance.

11. Slide mower out from under the machine.

Installing Mower (42 Inch Mower)

1. Park machine safely. (See Parking Safely in the SAFETY section.)

2. Allow engine and muffler to cool completely.

CAUTION: Avoid injury! Rotating blades are dangerous. Before adjusting or servicing mower:

- **Disconnect spark plug wire(s) or battery negative (-) cable to prevent engine from starting accidently.**
- **Always wear gloves when handling mower blades or working near blades.**

3. Raise mower lift lever fully upward into transport lock position.
4. Slide mower deck under machine.

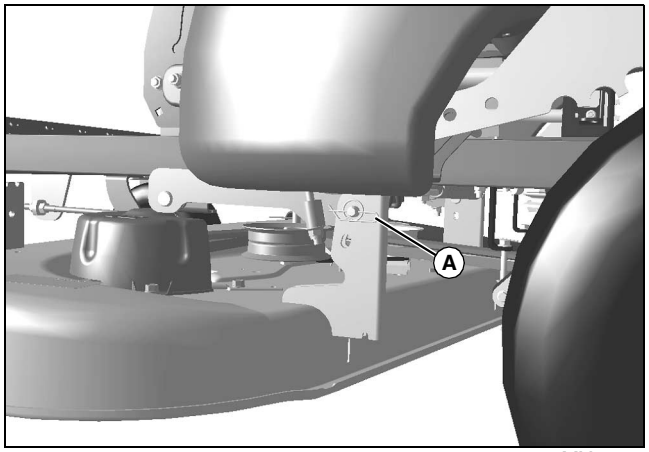

MX37773

5. Lower mower lift lever, and install pin and spring clip (A) onto each side of rear mower bracket.

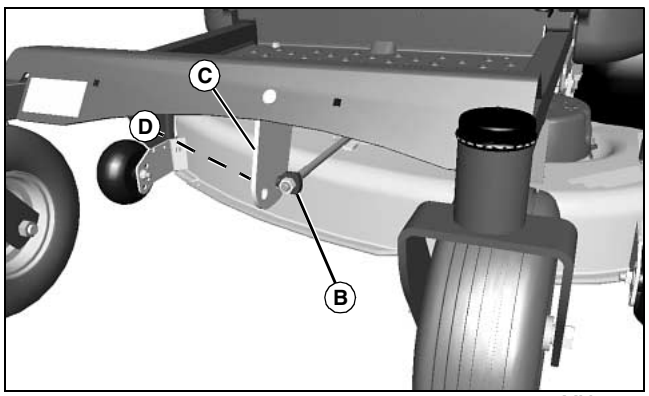

MX39626

6. Install stud (B) onto front draft bracket (C). Secure with locking clip (D).

CAUTION: Avoid injury! Component is spring-assisted and under tension. Injury can occur if spring-assisted component is released suddenly.

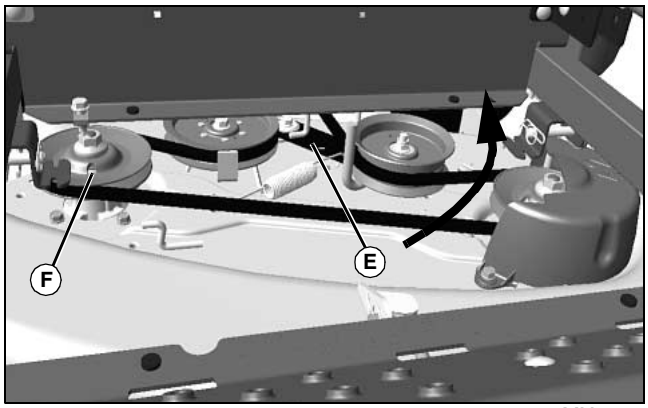

MX37890

7. Connect mower drive belt:
   - Install belt onto engine sheave.
   - Install 3/8-inch ratchet onto square hole (E) in tension arm and rotate counterclockwise to release tension on belt, while installing mower belt onto left spindle sheave (F). Make sure belt is properly seated on all sheaves.
8. Install foot plate.

Installing Mower (48 and 54 Inch Mowers)

1. Park machine safely. (See Parking Safely in the SAFETY section.)
2. Allow engine and muffler to cool completely.

CAUTION: Avoid injury! Rotating blades are dangerous. Before adjusting or servicing mower:

- **Disconnect spark plug wire(s) or battery negative (-) cable to prevent engine from starting accidently.**
- **Always wear gloves when handling mower blades or working near blades.**

3. Raise mower lift lever fully upward into transport lock position.
4. Slide mower deck under machine.

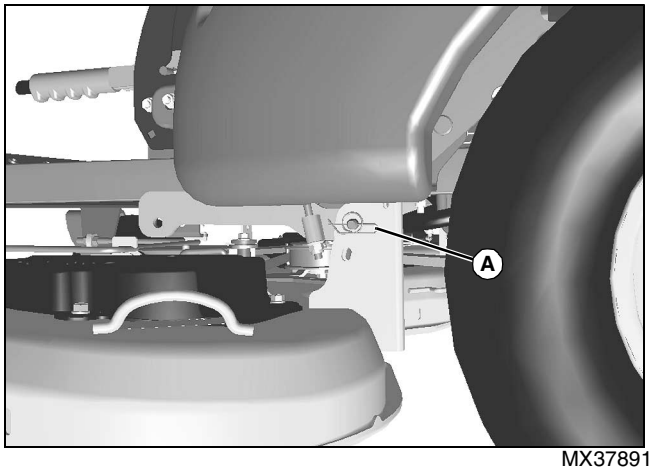

MX37891

5. Lower mower lift lever, and install pin and spring clip (A) onto each side of rear mower bracket.

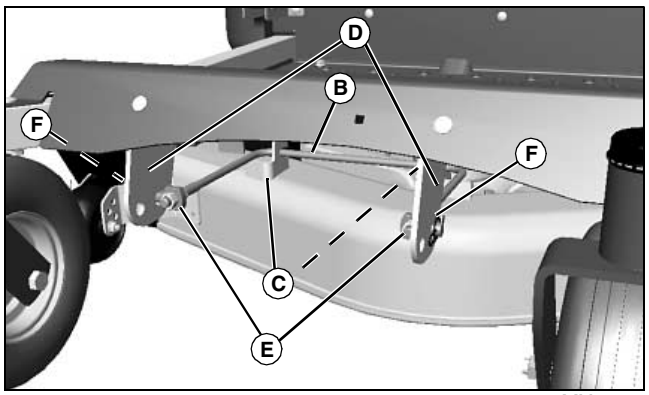

MX39628

6. Install front draft rod (B) onto mower deck bracket (C) and onto draft bracket (D). Secure stud ends (E) with locking clip (F).

CAUTION: Avoid injury! Component is spring-assisted and under tension. Injury can occur if spring-assisted component is released suddenly.

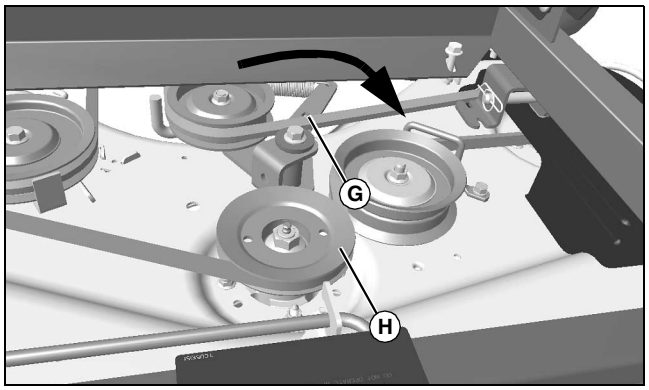

MX37889

Picture Note: 48 inch mower deck shown.

7. Connect mower drive belt:

- Install belt onto engine sheave.

NOTE: Left and right spindle sheaves are hidden by belt covers. Failure to seat belt properly on sheaves may result in belt damage.

- Install 3/8-inch ratchet onto square hole (G) in tension arm and rotate clockwise to release tension on belt, while installing mower belt onto center spindle sheave (H). Make sure belt is properly seated on all sheaves.

8. Install foot plate.

Installing Mower (Z445 54 Inch HC and Z465 62 Inch Mowers)

1. Park machine safely. (See Parking Safely in the SAFETY section.)
2. Allow engine and muffler to cool completely.

CAUTION: Avoid injury! Rotating blades are dangerous. Before adjusting or servicing mower:

- **Disconnect spark plug wire(s) or battery negative (-) cable to prevent engine from starting accidently.**
- **Always wear gloves when handling mower blades or working near blades.**

3. Raise mower lift lever fully upward into transport lock position.
4. Slide mower deck under machine.

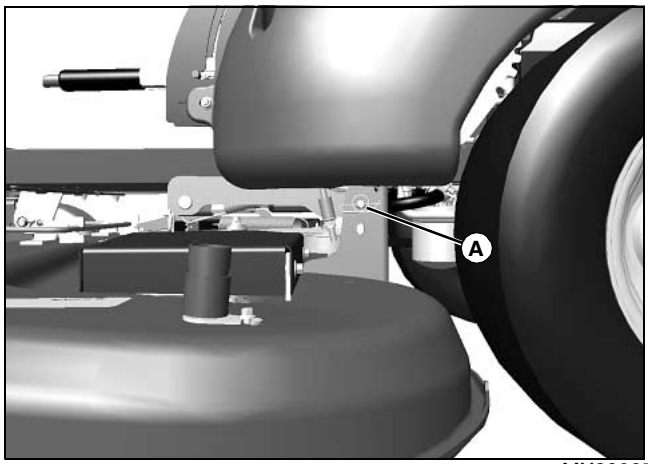

MX39625

5. Lower mower lift lever, and install pin and spring clip (A) onto each side of rear mower bracket.

NOTE: To ease installation of the side draft rods, the weight of the mower can be supported by placing a wooden block under the front lip of the mower.

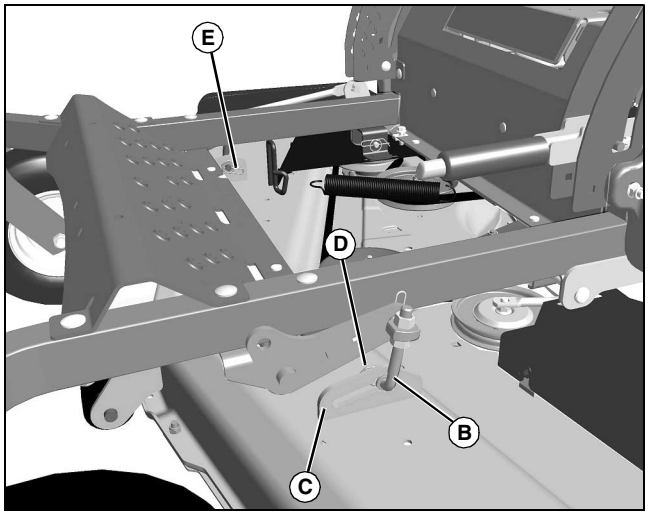

MX40978

6. Install side draft rod (B) onto mower draft bracket (C). Secure with spring locking pin (D). Repeat on opposite side (E).

CAUTION: Avoid injury! Component is spring-assisted and under tension. Injury can occur if spring-assisted component is released suddenly.

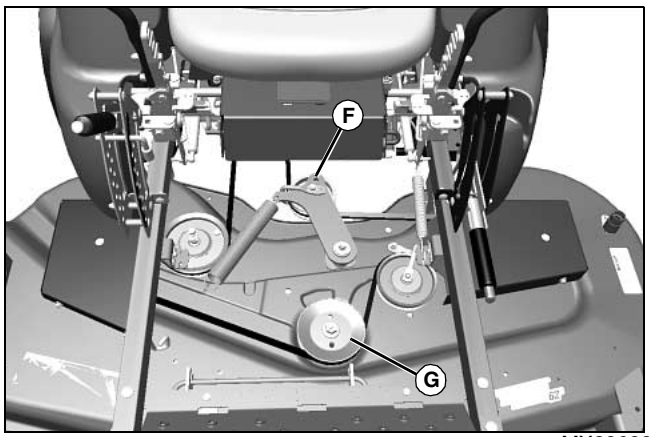

MX39623

Picture Note: 62 in. Deck Shown. (Some components not shown for clarity.)

7. Connect mower drive belt:

- Install belt onto engine sheave.

NOTE: Left and right spindle sheaves are hidden by belt covers. Failure to seat belt properly on sheaves may result in belt damage.

- Install 3/8 in. ratchet into square hole (F) in tension arm and rotate clockwise to release tension on belt, while installing mower belt onto center spindle sheave (G). Make sure that belt is properly seated on all sheaves.
- Install foot plate.

Replacing Mower Drive Belt (42 Inch Mower)

1. Park machine safely. (See Parking Safely in SAFETY section.)
2. Allow engine and muffler to cool completely.
3. Remove mower deck.
4. Remove drive belt:

CAUTION: Avoid injury! Components are installed under spring tension. Wear eye protection and use proper tools when installing and removing components with spring tension.

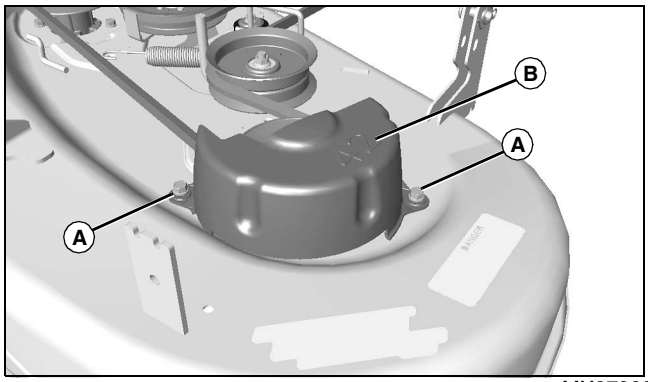

MX37892

- Remove two bolts (A) and left belt cover (B).

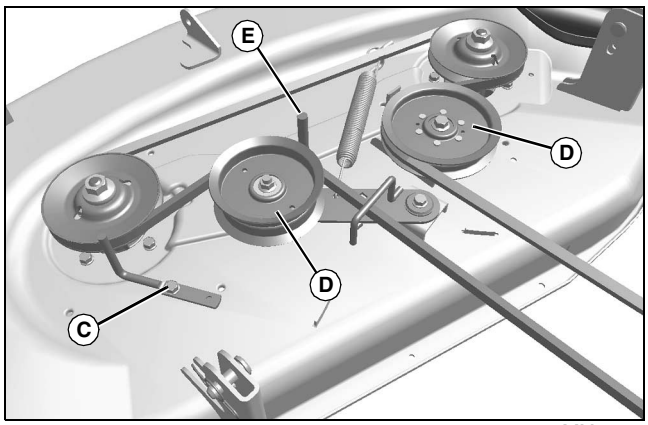

MX37893

- Loosen bolt (C) on belt guide.
- Loosen hardware on two sheaves (D), and remove belt from all sheaves.

5. Inspect belt for wear or damage; replace as necessary.
6. Clean top surface of mower deck and sheaves.
7. Install belt on mower deck as shown.
8. Install and tighten bolt (C) on belt guide.

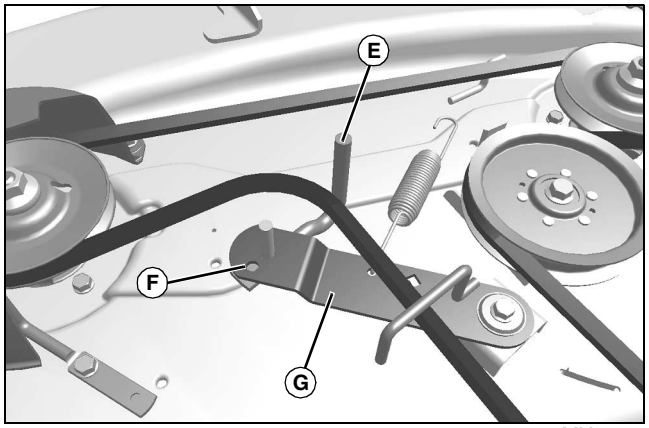

MX38099

Picture Note: Shown without sheave for clarity only.

9. Make sure belt guide (E) is indexed properly into hole (F) on tension arm (G).

10. Tighten sheave hardware to 47 N•m (35 lb-ft).

11. Make sure belt is properly seated on all sheaves, and install belt shield.

12. Install mower deck.

Replacing Mower Drive Belt (Z245 48 Inch Mower)

1. Park machine safely. (See Parking Safely in SAFETY section.)

2. Allow engine and muffler to cool completely.

3. Remove mower deck.

4. Remove drive belt:

CAUTION: Avoid injury! Components are installed under spring tension. Wear eye protection and use proper tools when installing and removing components with spring tension.

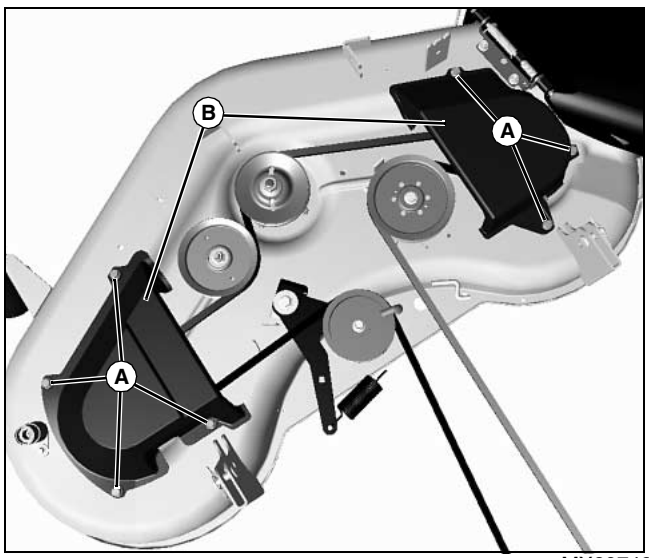

MX39748

- Remove seven bolts (A) and left and right belt covers (B).

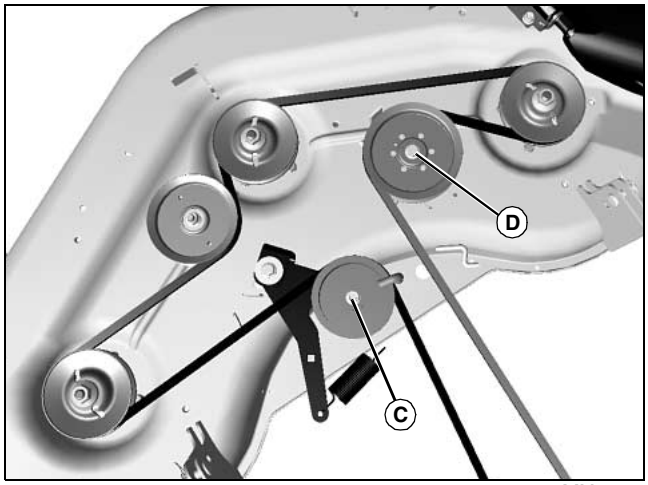

MX39749

- Loosen nut (C) and bolt (D) on sheaves, and remove belt from all sheaves.

5. Inspect belt for wear or damage; replace as necessary.

6. Clean top surface of mower deck and sheaves.

7. Install belt on mower deck as shown.

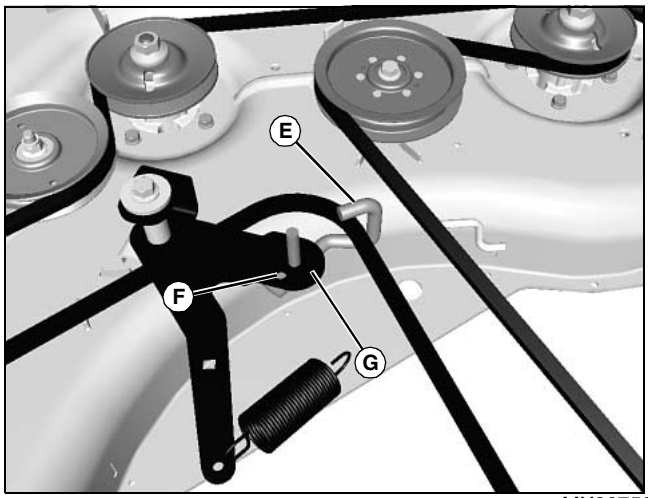

MX39750

Picture Note: Shown without sheave for clarity only.

8. Make sure belt guide (E) is indexed properly into hole (F) on tension arm (G).

9. Tighten sheave nut (C) and bolt (D) to 47 N•m (35 lb-ft).

NOTE: Failure to seat belt properly on sheaves may result in belt damage.

10. Make sure belt is properly seated on all sheaves, and install belt shields.

11. Install mower deck.

Replacing Mower Drive Belt (Z400 Series 48 and 54 in. Mowers)

1. Park machine safely. (See Parking Safely in SAFETY section.)

2. Allow engine and muffler to cool completely.

3. Remove mower deck.

4. Remove drive belt:

CAUTION: Avoid injury! Components are installed under spring tension. Wear eye protection and use proper tools when installing and removing components with spring tension.

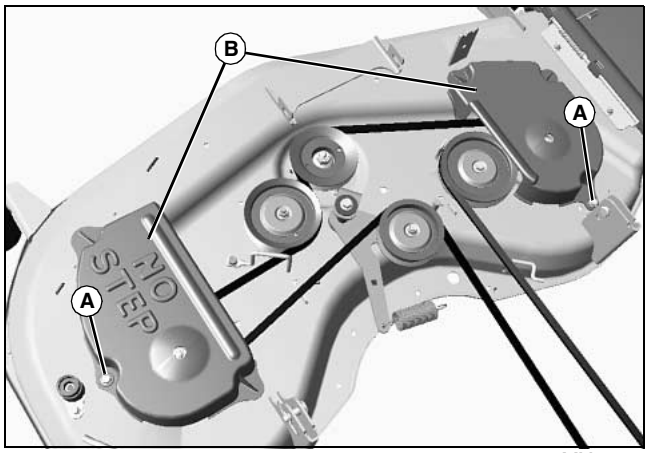

MX39719

Picture Note: Z400 Series 48 inch mower deck shown.

- Remove two bolts (A) and left and right belt covers (B).

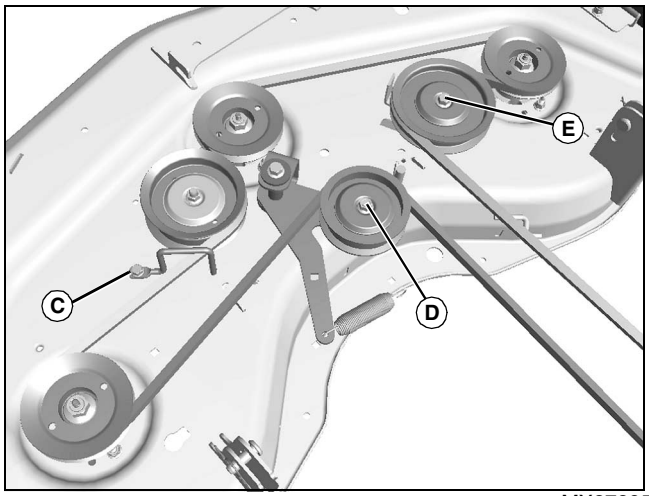

MX37895

- Loosen bolt (C) on belt guide.
- Loosen nut (D) and bolt (E) on sheaves, and remove belt from all sheaves.

5. Inspect belt for wear or damage; replace as necessary.
6. Clean top surface of mower deck and sheaves.
7. Install belt on mower deck as shown.
8. Install and tighten bolt (C) on belt guide.

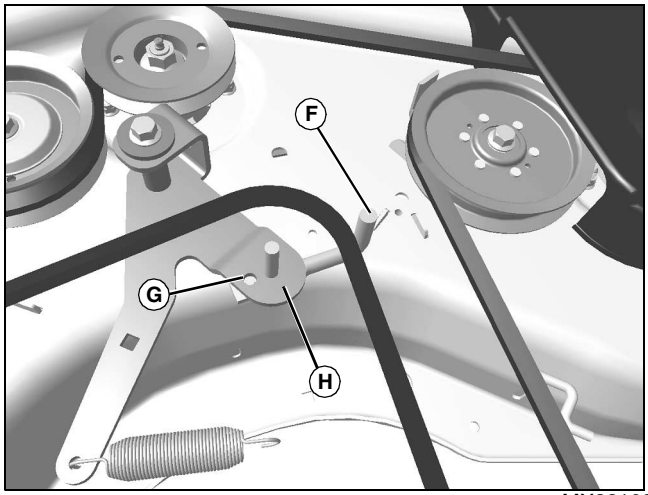

MX38100

Picture Note: Shown without sheave for clarity only.

9. Make sure belt guide (F) is indexed properly into hole (G) on tension arm (H).
10. Tighten sheave nut (D) and bolt (E) to 47 N•m (35 lb-ft).

NOTE: Failure to seat belt properly on sheaves may result in belt damage.

11. Make sure belt is properly seated on all sheaves, and install belt shields.
12. Install mower deck.

Replacing Mower Drive Belt (62 Inch Mower)

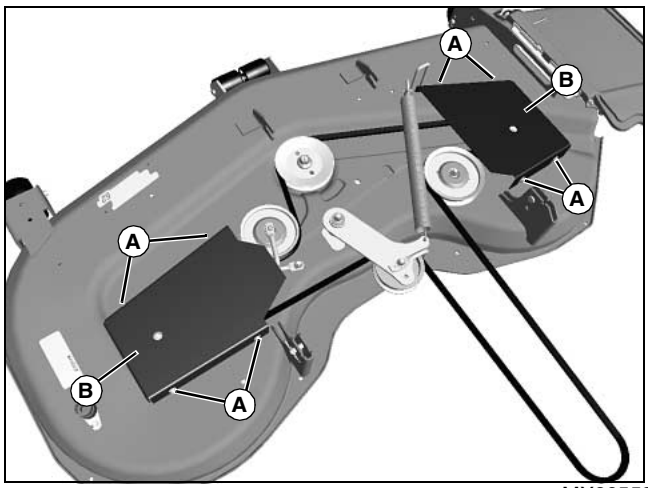

MX39553

1. Loosen eight bolts (A), and remove right and left belt covers (B).

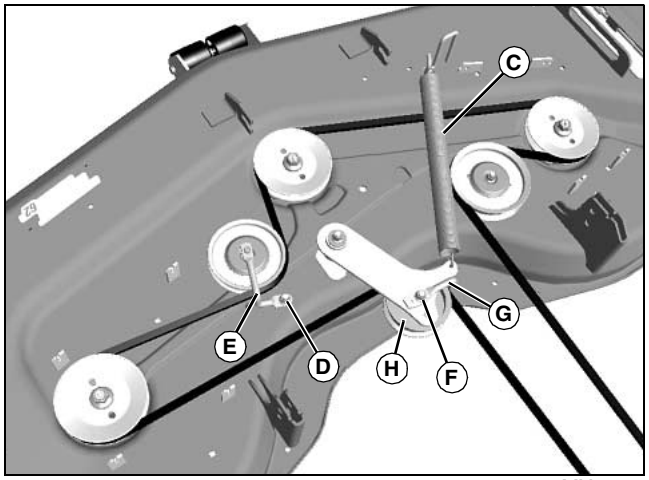

MX39554

2. Unhook tensioning spring (C) from deck anchor bracket.

3. Loosen nut (D), securing idler pulley belt guide (E) enough to tilt guide off pulley bolt. Pivot belt guide for clearance.

4. Loosen nut (F) securing belt guide (G) and tensioner pulley (H).

5. Remove belt from all sheaves

6. Inspect belt for wear or damage; replace as necessary.

7. Clean top surface of mower deck and sheaves.

8. Install belt on mower deck as shown.

9. Hook tensioning spring to deck anchor bracket.

10. Pivot belt guides to correct position and tighten nuts to secure. Nut (F) on tensioning pulley should be tightened to 47 N•m (35 lb-ft).

NOTE: Failure to seat belt properly on sheaves may result in belt damage.

11. Make sure belt is properly seated on all sheaves, and install belt shields.

12. Install mower deck.

Checking for Bent Mower Blades

CAUTION: Avoid injury! Blades are sharp. Always wear gloves when handling blades or working near blades.

Replace blades if defective. Never straighten or weld them.

1. Park machine safely. (See Parking Safely in the SAFETY section.)

2. Raise mower deck to highest position to access blades.

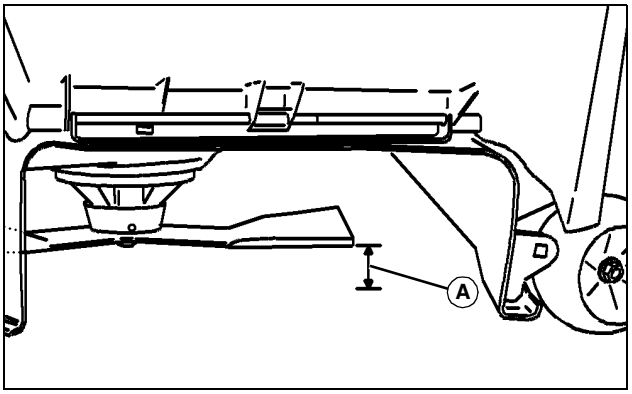

MX4897

Picture Note: Mower deck with side discharge used for illustration

3. Measure distance (A) between blade tip and flat ground surface.

4. Rotate blade 180° and measure distance between other blade tip and flat ground surface.

5. Install new blade if the difference between the two measurements is more than 3 mm (1/8 in.).

6. Repeat for all blades.

Servicing Mower Blades

CAUTION: Avoid injury! Rotating blades are dangerous. Before adjusting or servicing mower:

- **Disconnect spark plug wire(s) or battery negative (-) cable to prevent engine from starting accidently.**
- **Always wear gloves when handling mower blades or working near blades.**

Removing Mower Blades

1. Park machine safely. (See Parking Safely in the SAFETY section.)

2. Raise mower deck to gain access to mower blades. If necessary, remove mower deck.

3. Block mower blade with a piece of wood to prevent it from spinning.

4. Remove mower blade(s):

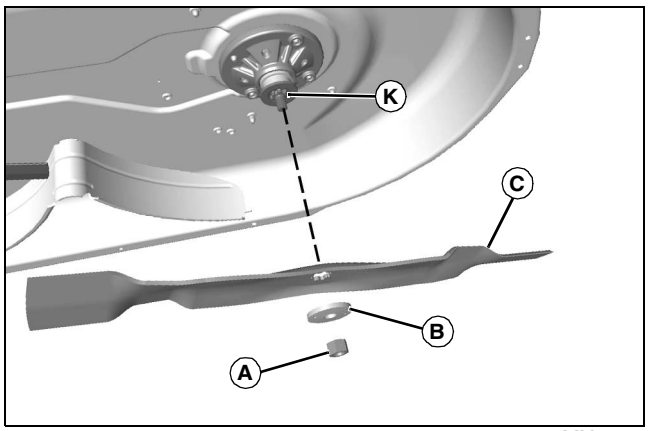

MX37886

Picture Note: 42 inch deck shown.

- Z200 series 42 and 48 inch mower decks: Loosen and remove nut (A), washer (B), and blade (C).

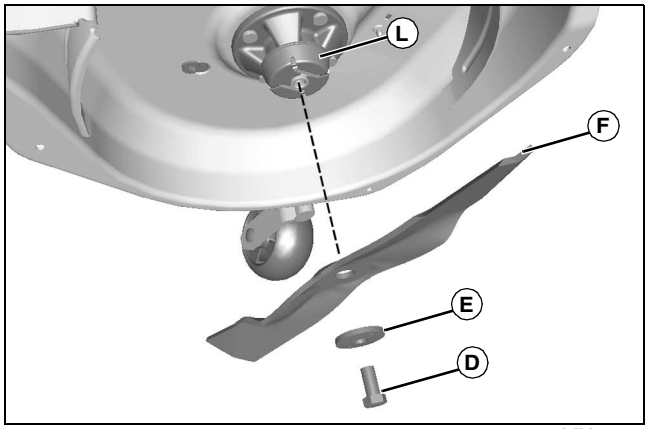

MX36300

Picture Note: Z400 series 48 inch deck shown.

- Z400 series 48, 54 and 62 inch decks: Loosen and remove bolt (D), washer (E), and blade (F).

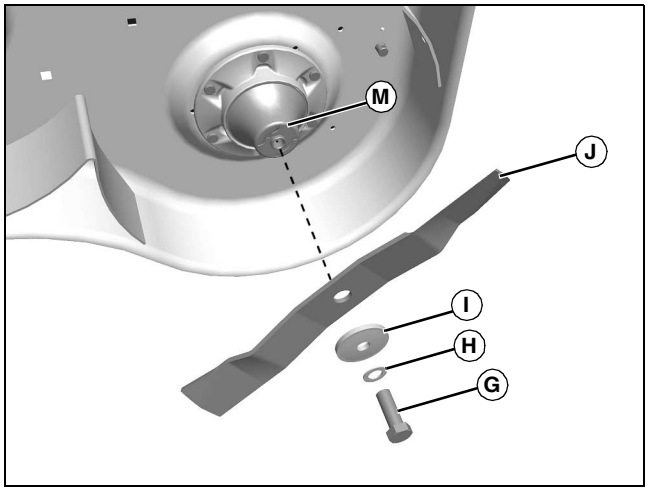

MX41279

- Z445 series 54 inch high capacity deck: Loosen and remove bolt (G), small washer (H), large washer (I), and blade (J).

5. Inspect blades; sharpen, balance or replace blades as necessary.

Installing Mower Blades

Z200 Series 42 and 48 Inch Mower Decks:

1. Align the splined center hole in the blade with the splined spindle shaft (K) and put the blade onto the mower spindle shaft with cutting edge toward ground.

2. Install washer (B), with cupped side towards blade, and install nut (A) to secure blade onto splined spindle shaft.

3. Block mower blade with a piece of wood to prevent spinning and tighten nut to 88 N•m (65 lb-ft).

Z400 Series 48, 54 and 62 Inch Mower Decks:

1. Make sure deflector cup (L) is seated properly between mower spindle and blade.

2. Position mower blade (F) with cutting edge toward ground onto mower spindle.

3. Install washer (E), with cupped side towards blade, and install bolt (D) to secure blade onto spindle shaft.

4. Block mower blade with a piece of wood to prevent spinning and tighten bolt to 68 N•m (50 lb-ft).

Z445 54 Inch High Capacity Mower Deck:

1. Make sure deflector cup (M) is seated properly between mower spindle and blade.

2. Position mower blade (J) with cutting edge toward ground onto mower spindle.

3. Install large washer (I), with cupped side towards blade, small washer (H), and bolt (G) to secure blade onto spindle shaft.

4. Block mower blade with a piece of wood to prevent spinning and tighten bolt to 122 N•m (90 lb-ft).

Service Electrical

WARNING: Battery posts, terminals and related accessories contain lead and lead components, chemicals known to the State of California to cause cancer and reproductive harm. **Wash hands after handling.**

Service the Battery Safely

CAUTION: Avoid injury! The battery produces a flammable and explosive gas. The battery may explode:

- **Do not smoke or have open flame near battery.**
- **Wear eye protection and gloves.**
- **Do not allow direct metal contact across battery posts.**
- **Remove negative cable first when disconnecting.**
- **Install negative cable last when connecting.**

Removing and Installing the Battery

Removing

1. Park machine safely. (See Parking Safely in the SAFETY section.)

2. Raise operator's seat.

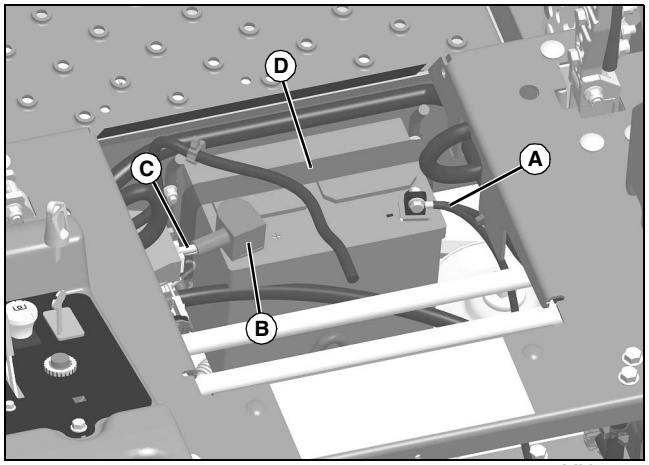

MX37907

3. Disconnect negative (-) battery cable (A).

4. Push red cover (B) away from positive (+) battery terminal and remove cable (C) from battery.

5. Remove hold down strap (D).

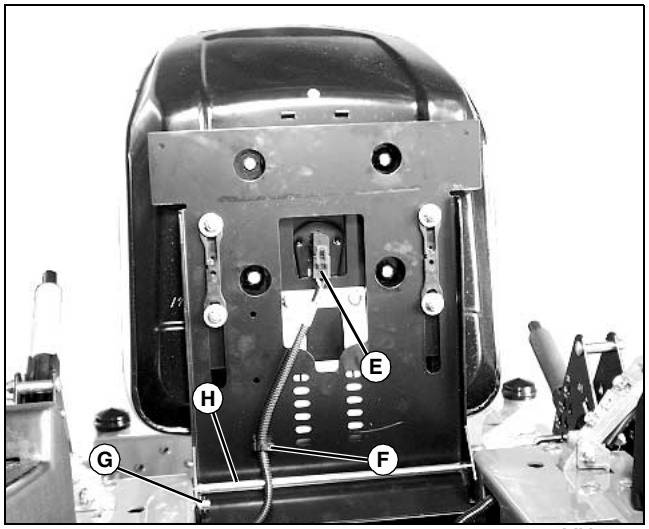

MX38092

6. Lower seat slightly to gain clearance for battery removal. Seat can be removed to have better access to the battery and make it easier to remove.

- To remove seat: Remove wiring harness connector (E) and harness plug (F) from seat. Remove retaining clip (G) and remove rod (H) holding seat to machine. Remove seat.

7. Remove battery.

Installing

1. Place battery into battery tray so battery posts are facing toward rear of machine.

2. Install hold down strap.

3. Connect positive (+) cable to battery first, then negative (-) cable.

4. Apply general purpose grease or silicone spray to terminal to help prevent corrosion.

5. Slide red cover over positive battery terminal.

6. Install seat, if removed.

7. Install wiring harness connector and harness plug on seat, if removed.

8. Lower seat.

Cleaning Battery and Terminals

1. Park machine safely. (See Parking Safely in the SAFETY section.)

2. Disconnect and remove battery.

3. Wash battery with solution of four tablespoons of baking soda to one gallon of water. Be careful not to get the soda solution into the cells.

4. Rinse the battery with plain water and dry.

5. Clean terminals and battery cable ends with wire brush until bright.

6. Install battery.

7. Attach cables to battery terminals, beginning with the positive cable, using washers and nuts.

8. Apply spray lubricant to terminal to prevent corrosion.

Using Booster Battery

CAUTION: Avoid injury! The battery produces a flammable and explosive gas. The battery may explode:

- **Do not smoke or have open flame near battery.**
- **Wear eye protection and gloves.**
- **Do not jump start or charge a frozen battery. Warm battery to 16°C (60°F).**
- **Do not connect the negative (-) booster cable to the negative (-) terminal of the discharged battery. Connect at a good ground location away from the discharged battery.**

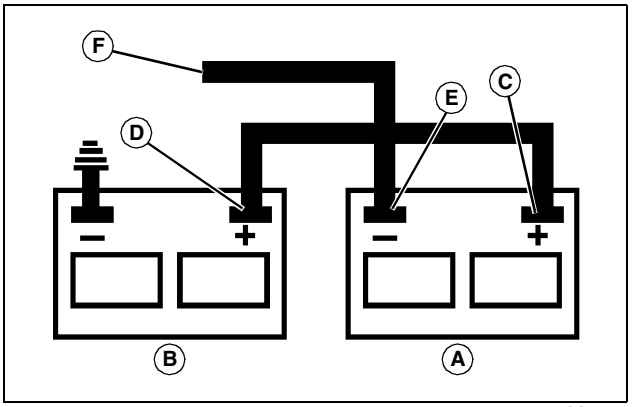

M71044

A- Booster Battery
B- Disabled Vehicle Battery

1. Connect positive (+) booster cable to booster battery (A) positive (+) post (C).

2. Connect the other end of positive (+) booster cable to the disabled vehicle battery (B) positive (+) post (D).

3. Connect negative (–) booster cable to booster battery negative (–) post (E).

IMPORTANT: Avoid damage! Electric charge from booster battery can damage machine components. Do not install negative booster cable to machine frame. Install only to the engine block.

Install negative booster cable away from moving parts in the engine compartment, such as belts and fan blades.

4. Connect the other end (F) of negative (–) booster cable to a metal part of the disabled machine engine block away from battery.

5. Start the engine of the disabled machine and run machine for several minutes.

6. Carefully disconnect the booster cables in the exact reverse order: negative cable first and then the positive cable.

Replacing Headlight Bulb (If Equipped)

1. Park machine safely. (See Parking Safely in the SAFETY section.)

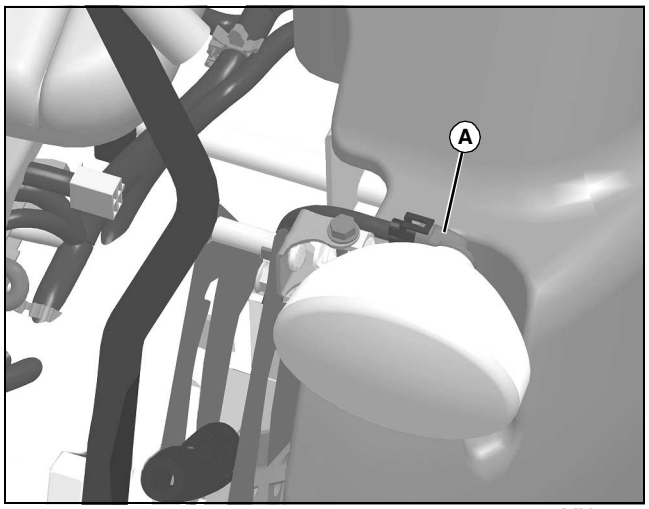

MX37472

2. Turn bulb socket (A) 1/4 turn counterclockwise to remove.

3. Replace defective bulb with a new bulb.

4. Insert bulb socket into housing, push in and turn 1/4 turn clockwise to install.

Replacing Fuse

1. Park machine safely. (See Parking Safely in the SAFETY section.)

2. Raise operator's seat.

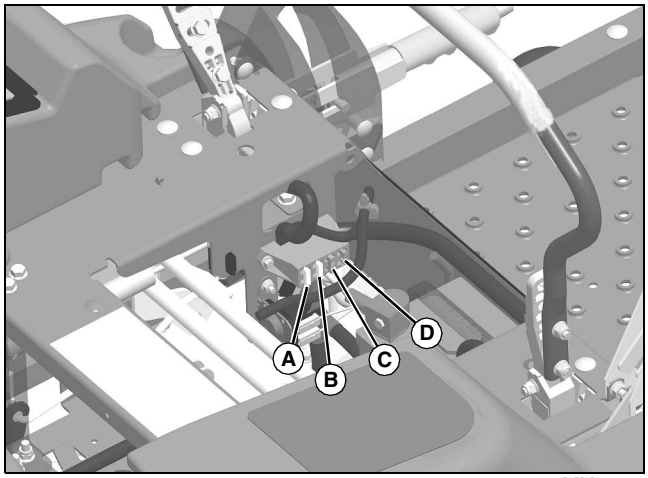

MX37906

Picture Note: Z225 shown.

3. Pull blown fuse out of socket.

- Fuse identification:

Position	Circuit	Fuse Size
A	Main Circuit	20 amp
B	Starter Circuit	20 amp
C	Key Switch/Fuel Solenoid	7.5 amp
D	Headlights (Optional)	7.5 amp

4. Check metal strip in fuse window and discard fuse(s) if strip is broken.

5. Push new, correct amp, fuse into correct socket.

6. Lower operator's seat.

Service Miscellaneous

Using Proper Fuel

Use regular grade unleaded fuel with an octane rating of 87 octane or higher. Fuel blends containing up to 10% ethanol or up to 15% MTBE reformulated fuel are acceptable. Do not use fuel or additives containing methanol as engine damage can occur.

Always use fresh, clean fuel that is purchased in a quantity that can be used within approximately 30 days, or add fuel stabilizer.

Fuel is blended to give best seasonal performance. To avoid engine performance problems such as hard starting or vapor lock, use in-season fuel. Use fuel during warm weather that was purchased during that season, and use fuel during cold weather that was purchased during that season.

Fuel can become stale in machines with engines that are used seasonally or infrequently during a season. Stale fuel can produce varnish and plug carburetor components which can affect engine performance.

Keep fuel storage container tightly covered and in a cool area out of direct sunlight. Fuel can break down and degrade if not sealed properly or exposed to sun and heat.

Condensation may collect in the fuel tank because of a variety of operating or environmental conditions and, over time, may affect your machine's operation. Fill fuel tank at the end of daily use and store fuel in plastic containers to reduce condensation.

For best year-round performance and fuel-handling, add stabilizer to fuel

immediately after fuel purchase. Such practice helps prevent engine performance problems and allows fuel storage in the machine all year without draining.

Filling Fuel Tank

CAUTION: Avoid injury! Fuel vapors are explosive and flammable:

- **Shut engine off before filling fuel tank.**
- **Allow engine to cool before refueling.**
- **Do not smoke while handling fuel.**
- **Keep fuel away from flames or sparks.**
- **Fill fuel tank outdoors or in well ventilated area.**
- **Clean up spilled fuel immediately.**
- **Use clean approved non-metal container to prevent static electric discharge.**

IMPORTANT: Avoid damage! Dirt and water in fuel can cause engine damage:

- **Clean dirt and debris from the fuel tank opening.**
- **Use clean, fresh, stabilized fuel.**
- **Fill the fuel tank at the end of each day's operation to keep condensation out of the fuel tank.**
- **Use a non-metallic funnel with a plastic mesh strainer when filling the fuel tank or container.**

Fill fuel tank at the end of each day's operation to prevent condensation and freezing during cold weather.

1. Park machine safely. (See Parking Safely in the SAFETY section.)
2. Allow engine to cool.
3. Remove any trash from area around fuel tank cap.
4. Remove fuel tank cap slowly to allow any pressure built up in tank to escape.
5. Fill fuel tank only to bottom of filler neck.
6. Install fuel tank cap.

Checking Tire Pressure

CAUTION: Avoid injury! Explosive separation of tire and rim parts is possible when they are serviced incorrectly:

- **Do not attempt to mount a tire without the proper equipment and experience to perform the job.**
- **Do not inflate the tires above the recommended pressure.**
- **Do not weld or heat a wheel and tire assembly. Heat can cause an increase in air pressure resulting in an explosion. Welding can structurally weaken or deform the wheel.**
- **Do not stand in front or over the tire assembly when inflating. Use a clip-on chuck and extension hose long enough to allow you to stand to one side.**

1. Check tires for damage.

NOTE: Refer to the SPECIFICATIONS section for tire pressures.

2. Check tire pressure with an accurate gauge.
3. Add or remove air, if necessary.

Removing and Installing Wheel Assembly

Removing

1. Park machine safely. (See Parking Safely in the Safety section.)

CAUTION: Avoid injury! The machine can fall or slip from an unsafe lifting device or supports.

- **Use a safe lifting device rated for the load to be lifted.**
- **Lower machine onto jack stands or other stable supports and block wheels before servicing.**

IMPORTANT: Avoid damage! Place jack stands under frame, not under transmission or engine, when raising or supporting machine.

2. Raise machine with a safe lifting device and lower machine onto jack stands or other stable supports. Block wheels remaining on the ground to prevent machine movement.

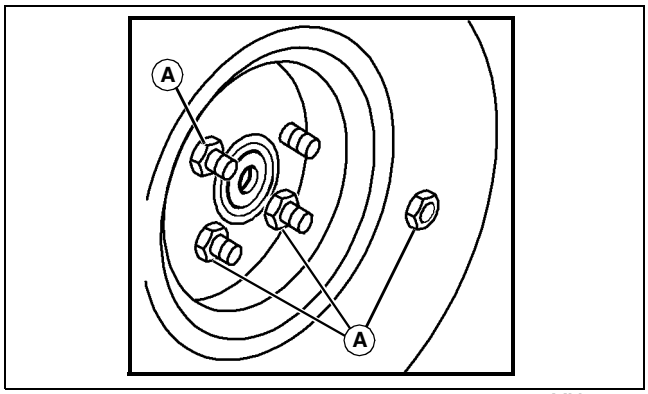

MX23115a

3. Remove the wheel nuts (A).
4. Remove the wheel assembly.

CAUTION: Avoid injury! Explosive separation of tire and rim parts is possible when they are serviced incorrectly:

- **Do not attempt to mount a tire without the proper equipment and experience to perform the job.**

5. Take wheel assembly to an authorized service dealer for repairs.

Installing

1. Install wheel assembly with valve stem to the outside.
2. Tighten wheel nuts evenly in alternating sequence until snug.
3. Lower machine completely to the ground.
4. Tighten wheel nuts to 102 N•m (75 lb-ft).

Removing and Installing Front Caster Wheels

Disassembly:

1. Park machine safely. See "Park Machine Safely" in the Safety section.

2. Jack up front of machine and place on safety stands.

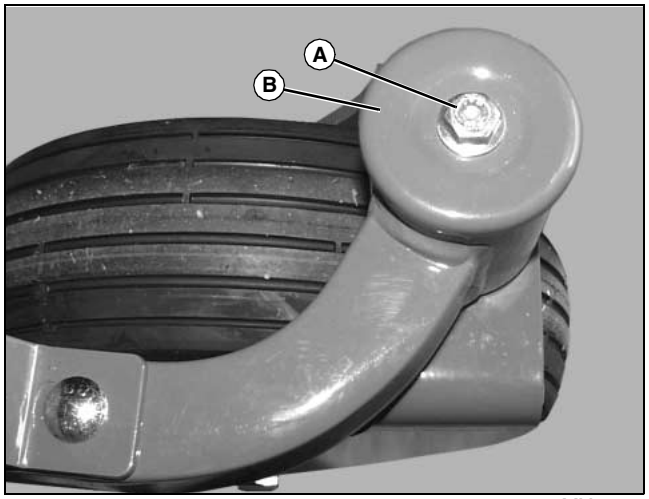

MX43296

3. Support caster assembly and remove flange bolt (A) and cap (B).

4. Remove caster from machine.

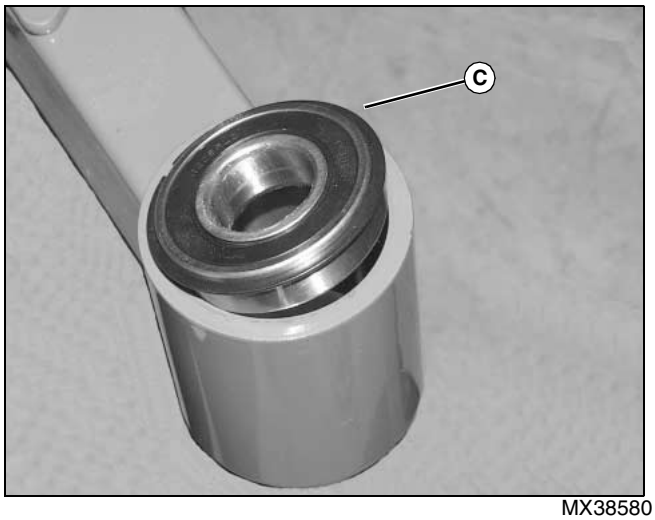

MX38580

5. Inspect bearings (C) at top and bottom of frame. Replace worn or damaged bearings.

MX43297

6. Remove nut (D) and pull bolt out of caster.

7. Remove wheel assembly (E).

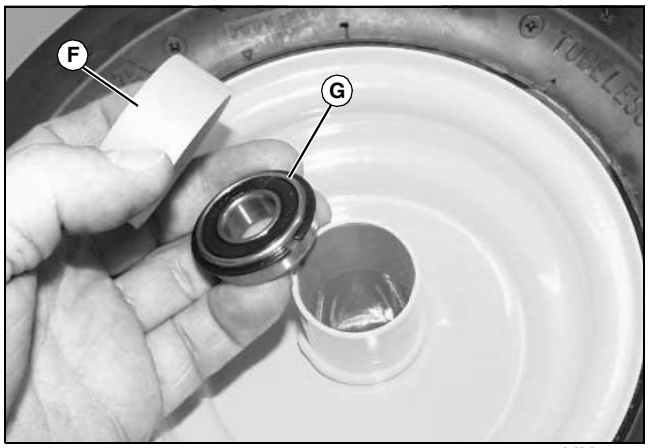

MX43298

8. Remove shield (F) and bearing (G). Inspect shields, wheel, and bearings for wear or damage. Replace worn or damaged parts.

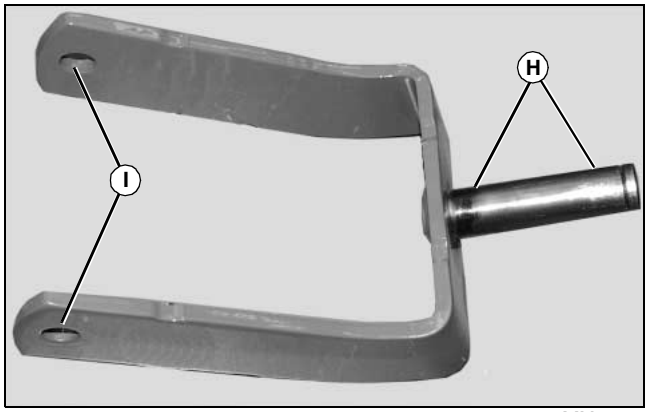

MX38582

9. Inspect bearing wear areas (H), and bolt holes (I) for wear or damage. Replace if necessary.

Assembly

- Apply grease to caster shaft and bolt.
- Assemble in the reverse order of disassembly.
- Tighten caster lock nut and bolt to 47 N•m (35 lb-ft).
- Tighten flange bolt securing yoke to 47 N•m (35 lb-ft).

Cleaning and Repairing Metal Surfaces

Cleaning:

Follow automotive practices to care for your vehicle painted metal surfaces. Use a high-quality automotive wax regularly to maintain the factory look of your vehicle's painted surfaces.

Repairing Minor Scratches (surface scratch):

1. Clean area to be repaired thoroughly.

IMPORTANT: Avoid damage! Do not use rubbing compound on painted surfaces.

2. Use automotive polishing compound to remove surface scratches.

3. Apply wax to entire surface.

Repairing Deep Scratches (bare metal or primer showing):

1. Clean area to be repaired with rubbing alcohol or mineral spirits.

2. Use paint stick with factory-matched colors available from your authorized dealer to fill scratches. Follow directions included on paint stick for use and for drying.

3. Smooth out surface using an automotive polishing compound. Do not use power buffer.

4. Apply wax to surface.

Troubleshooting

Using Troubleshooting Chart

If you are experiencing a problem that is not listed in this chart, see your authorized dealer for service.

When you have checked all the possible causes listed and you are still experiencing the problem, see your authorized dealer.

Engine

IF	CHECK
Poor Engine Performance	Dirt in fuel system or fuel is old. Replace fuel with fresh stabilized fuel. Obtain fuel from another supplier before suspecting machine problems. Suppliers blend fuels differently and changing suppliers will generally solve any performance problems Fuel blended with alcohol or ether may contribute to performance problems by causing gum and varnish deposits, especially if fuel is stored for several weeks or more. Obtain fresh fuel.
Engine Will Not Start - No Crank	Park brake not locked. Motion control levers not in Start/ Shutdown position. Mower is engaged. Defective brake, mower engagement, or key switch. Electrical problem - See Electrical Troubleshooting Section
Engine Cranks But Will Not Start	Spark plug wire is loose or disconnected. Improper fuel. Plugged fuel filter. Electrical problem - See Electrical Troubleshooting Section
Engine Is Hard To Start	Carburetor is not adjusted properly or dirty. Choke not fully closing. Plugged fuel filter. Faulty spark plug. Stale or improper fuel. Loose or corroded electrical connections. Engine oil viscosity.
Engine Runs Unevenly	Cooling fins plugged. Loose electrical connections. Choke or throttle cable sticking. Choke not fully open. Fuel line or fuel filter plugged. Stale or dirty fuel. Improper fuel. Air cleaner element plugged.
Engine Misses Under Load	Faulty spark plug. Stale or dirty fuel. Plugged fuel filter.
Engine Vapor Locks	Fuel tank vent plugged. Dirt in fuel filter. Cooling fins plugged. Loose hose connection at fuel filter or fuel pump.
Engine Overheats	Engine air intake screen plugged. Cooling fins plugged. Engine oil low or too high. Engine operated too long at a slow idle speed.
Engine Will Not Idle	Spark plug not gapped correctly. Faulty spark plug. Operator raising off the seat.
Engine Knocks	Stale or low octane fuel. Engine overloaded. Low engine speed. Oil level low.
Engine Stops Or Misses When Operating On Hillsides	Fuel tank less than half full of fuel. Operator raising off of the seat.
Engine Backfires	Faulty spark plug. Operator raising off of the seat.
Engine Loses Power	Engine overheating. Too much oil in engine. Dirty air cleaner. Faulty spark plug. Travel speed is too fast for conditions. Improper fuel.

IF	CHECK
Excessive Fuel Consumption	Choke is not fully open.
Black Exhaust Smoke	Air filter is dirty or oil soaked.

Electrical

IF	CHECK
Starter Does Not Work Or Will Not Turn Engine	Park brake not locked. Mower is engaged. Battery terminals are corroded. Battery not charged. Motion control levers not in Start/ Shutdown position. Blown fuse. Defective key switch
Battery Will Not Charge	Dead cell in the battery. Blown charging fuse. Battery cables and terminals are dirty. Low engine speed or excessive idling.
Lights Do Not Work	Light plug disconnected. Loose or burned out bulb. Blown headlight fuse.

Machine

IF	CHECK
Machine Vibrates Too Much Or Rattles Excessively	Attachment drive belts worn or damaged. Mower blades not balanced. Traction drive belt damaged or worn. Dirt on drive sheaves.
Machine Will Not Move With Engine Running	Transmission hydraulic oil level low. Transmission belt broke. Bypass valve levers are engaged (Z225 and Z245). Bypass valves are in open position (Z425, Z445 and Z465).
Machine Moves With Engine Running And Hydrostatic Control In Neutral	Linkage out of adjustment. Transmission neutral out of adjustment.
Mower Lift Will Not Latch in Transport	Deck is adjusted too high.
Front of machine squeaks while driving	Lubricate mower front draft rod at front and rear pivot points.

Mower

IF	CHECK
Discharge Chute Plugged	Travel speed too fast. Grass too long. Grass too wet. Engine rpm not at mow position. Restricted air flow. Belt installed incorrectly. Adjust cutting height to remove only 1/3 of grass at a time.
Patches Of Grass Uncut	Travel speed too fast. Engine rpm not at mow position. Mower deck needs cleaning.
Belt Slipping	Debris in sheaves. Worn belt. Belt tension is incorrect.
Too Much Vibration	Debris on mower deck or in sheaves. Damaged drive belt. Damaged sheaves or sheaves out of alignment. Blades out of balance.
Front Tires Vibrate	Set front tire pressure to 10 psi. If vibration continues, reduce tire pressure by 1 psi until vibration stops. Do not reduce tire pressure below 6 psi.
Blades Scalping Grass	Cutting too low. Mower wheels not adjusted correctly. Turning speed too fast. Ridges in terrain. Rough or uneven terrain. Low tire pressure.
Mower Loads Down Tractor	Engine rpm too low. Travel speed too fast. Debris wrapped around mower spindles. Adjust cutting height to remove only 1/3 of grass at a time.
Uneven Cut	Mower deck not leveled properly. Travel speed too fast. Blades dull. Mower wheels not adjusted correctly. Tire pressure unequal. Adjust cutting height to remove only 1/3 of grass at a time.

IF	CHECK
Excessive Clippings are Expelled from Front of Mower Deck	Conditions may be too dry or terrain too uneven to provide good seal between front of deck and grass. Visit http://JDParts.deere.com or contact dealer to purchase dry condition kit. 42” Edge Deck - BM20505 48” Edge Deck (Z245 only) -BG20470 48” Edge Deck (Z425 and Z445) - AM133764 54” Edge Deck (Z425 and Z445) - AM133765 62” Edge Deck - AM133766

Storage

Storing Safety

CAUTION: Avoid injury! Fuel vapors are explosive and flammable. Engine exhaust fumes contain carbon monoxide and can cause serious illness or death:

- **Run the engine only long enough to move the machine to or from storage.**
- **Machine fires and structure fires can occur if a machine is stored before allowing it to cool, or if debris is not removed from around the engine and muffler, or if stored near combustible materials.**
- **Do not store vehicle with fuel in the tank inside a building where fumes may reach an open flame or spark.**
- **Allow the engine to cool before storing the machine in any enclosure.**

Preparing Machine for Storage

1. Repair any worn or damaged parts. Replace parts if necessary. Tighten loose hardware.

2. Repair scratched or chipped metal surfaces to prevent rust.

3. Remove grass and debris from machine.

4. Clean under the deck and remove grass and debris from inside chute and bagger.

5. Wash the machine and apply wax to metal and plastic surfaces.

6. Run machine for five minutes to dry belts and pulleys.

7. Apply light coat of engine oil to pivot and wear points to prevent rust.

8. Lubricate grease points and check tire pressure.

Preparing Fuel and Engine For Storage

Fuel:

If you have been using “Stabilized Fuel,” add stabilized fuel to tank until the tank is full.

NOTE: Filling the fuel tank reduces the amount of air in the fuel tank and helps reduce deterioration of fuel.

If you are not using “Stabilized Fuel:”

1. Park machine safely in a well-ventilated area. (See Parking Safely in the SAFETY section.)

NOTE: Try to anticipate the last time the machine will be used for the season so very little fuel is left in the fuel tank.

2. Turn on engine and allow to run until it runs out of fuel.

3. For machines equipped with key switch, turn key to off position.

IMPORTANT: Avoid damage! Stale fuel can produce varnish and plug carburetor or injector components and affect engine performance.

- **Add fuel conditioner or stabilizer to fresh fuel before filling tank.**

4. Mix fresh fuel and fuel stabilizer in separate container. Follow stabilizer instructions for mixing.

5. Fill fuel tank with stabilized fuel.

6. Run engine for a few minutes to allow fuel mixture to circulate through carburetor on gas engine or fuel injectors on diesel engine.

Engine:

Engine storage procedure should be used when vehicle is not to be used for longer than 60 days.

1. Change engine oil and filter while engine is warm.

2. Service air filter if necessary.

3. Clean debris from engine air intake screen.

4. On gas engines:

- Remove spark plugs. Put 30 mL (1 oz) of clean engine oil in cylinder(s).
- Install spark plugs, but do not connect spark plug wires.
- Crank the engine five or six times to allow oil to be distributed.

5. Clean the engine and engine compartment.

6. Remove battery.

7. Clean the battery and battery posts. Check the electrolyte level, if your battery is not maintenance free.

8. Close fuel shut-off valve, if your machine is equipped.

9. Store the battery in a cool, dry place where it will not freeze.

NOTE: The stored battery should be recharged every 90 days.

10. Charge the battery.

IMPORTANT: Avoid damage! Prolonged exposure to sunlight could damage the hood surface. Store machine inside or use a cover if stored outside.

11. Store the vehicle in a dry, protected place. If vehicle is stored outside, put a waterproof cover over it.

Removing Machine From Storage

1. Check tire pressure.

2. Check engine oil level.

3. Check battery electrolyte level, if your battery is not maintenance free. Charge battery if necessary.

4. Install battery.

5. On gas engines: Check spark plug gap. Install and tighten plugs to specified torque.

6. Lubricate all grease points.

7. Open fuel shut-off valve, if your machine is equipped.

8. Run the engine 5 minutes without the mower or any attachments running to allow oil to be distributed throughout engine.

9. Be sure all shields and guards or deflectors are in place.

Specifications

Engine

Z225

Make	Briggs and Stratton
Model Number	Intek - 31P707
Bore	90.68 mm (3.57 in.)
Stroke	77.72 mm (3.06 in.)
Displacement	502 cm^3 (30.63 cu in.)
Cylinders	Single
Cycle	Four
Magneto Air Gap	0.25 - 0.35 mm (0.010 - 0.014 in.)
Valve Clearance - Intake	0.08 - 0.13 mm (0.003 - 0.005 in.)
Valve Clearance - Exhaust	0.13 - 0.18 mm (0.005 - 0.007 in.)
Spark Plug Gap	0.76 mm (0.030 in.)
Spark Plug Torque	20 N•m (180 lb-in.)

Z245

Make	Briggs and Stratton
Model Number	Intek - 445577
Bore	79.25 mm (3.120 in.)
Stroke	73.40 mm (2.890 in.)
Displacement	725 cm^3 (44.2 cu in.)
Cylinders	V-Twin
Cycle	Four
Armature Air Gap	0.20 - 0.30 mm (0.008 - 0.012 in.)
Valve Clearance (Cold)	0.10 - 0.15 mm (0.004 - 0.006 in.)
Spark Plug Gap	0.76 mm (0.030 in.)
Spark Plug Torque	20 N•m (180 lb-in.)

Z425

Make	Briggs and Stratton
Model Number	Intek - 445577
Bore	79.25 mm (3.120 in.)
Stroke	73.40 mm (2.890 in.)
Displacement	725 cm^3 (44.2 cu in.)
Cylinders	V-Twin
Cycle	Four
Armature Air Gap	0.20 - 0.30 mm (0.008 - 0.012 in.)
Valve Clearance (Cold)	0.10 - 0.15 mm (0.004 - 0.006 in.)
Spark Plug Gap	0.76 mm (0.030 in.)
Spark Plug Torque	20 N•m (180 lb-in.)

Z445

Make	Torque™ Power System - Kawasaki
Model Number	FH721V
Bore	75.2 mm (2.96 in.)
Stroke	76 mm (2.99 in.)
Displacement	675 cm^3 (41.2 cu in.)
Cylinders	V-Twin
Cycle	Four
Ignition Coil Air Gap	0.25 - 0.40 mm (0.010 - 0.016 in.)
Valve Clearance (Intake and Exhaust) (Cold)	0.075- 0.125 mm (0.003 - 0.005 in.)
Spark Plug Gap	0.76 mm (0.030 in.)
Spark Plug Torque	20 N•m (180 lb-in.)

Z465

Make	Torque™ Power System - Kawasaki
Model Number	FH721V
Bore	75.2 mm (2.96 in.)
Stroke	76 mm (2.99 in.)
Displacement	675 cm^3 (41.2 cu in.)
Cylinders	V-Twin
Cycle	Four
Ignition Coil Air Gap	0.25 - 0.40 mm (0.010 - 0.016 in.)
Valve Clearance (Intake and Exhaust) (Cold)	0.075- 0.125 mm (0.003 - 0.005 in.)
Spark Plug Gap	0.76 mm (0.030 in.)
Spark Plug Torque	20 N•m (180 lb-in.)

Drivetrain

Pump (Z425, Z445, Z465)	Kanzaki DUP-10
Transaxle Motors (Z225, Z245)	Hydro-Gear EZT
Wheel Motors (Z425, Z445, Z465)	Parker TE0195
Number of Speeds	Hydrostatic, Variable Speed

Fuel System

Fuel Types (Recommended):

Regular Grade 87 Octane Unleaded Fuel

Ethanol Blended Fuel (Up to 10%)

MTBE Reformulated Fuel (Up to 15%)

Fuel Filter	Replaceable - paper element
Fuel Pump	Pulse
Fuel Delivery	Carburetor

Electrical System

Battery Type	12 Volt
Cold Cranking Capacity	235 Amps

Tires

Front	13x5.00-6 (Ribbed)
Rear (Z225)	18x8.50-8 (Turf)
Rear (Z245)	18x9.50-8 (Turf)
Rear (Z425 and Z445)	22x9.5-10 (Turf)
Rear (Z465)	23x10.5-12 (Turf)
Inflation - Front	69 kPa (10 psi)
Inflation - Rear	69 kPa (10 psi)

Capacities

Crankcase:

Single cylinder Briggs and Stratton	1.4 L (1.5 qt)

Twin cylinder Briggs and Stratton . . . . . 1.6 L (1.75 qt)
Twin cylinder Kawasaki . . . . . 1.5 L (1.6 qt)

Fuel Tank
Z225 and Z245 . . . . . 10.2 L (2.7 gal)
Z425, Z445, and Z465 . . . . . 13.2 L (3.5 gal)

Transaxle Reservoir (Z425, Z445 and Z465) . . . . . 7.57 L (2.0 gal)

Travel Speeds at Full Engine RPM

Z225 and Z245
Forward . . . . . 0-11.3 km/h (0-7.0 mph)
Reverse . . . . . 0-5.6 km/h (0-3.5 mph)

Z425 and Z445
Forward . . . . . 0-13.7 km/h (0-8.5 mph)
Reverse . . . . . 0-5.6 km/h (0-3.5 mph)

Z465
Forward . . . . . 0-14.5 km/h (0-9.0 mph)
Reverse . . . . . 0-5.6 km/h (0-3.5 mph)

Dimensions

Z225
Height . . . . . 980 mm (38-9/16 in.)
Width . . . . . 1320 mm (52 in.)
Length . . . . . 1878 mm (73-15/16 in.)
Weight . . . . . 234 kg (515 lb)

Z245
Height . . . . . 980 mm (38-9/16 in.)
Width . . . . . 1545 mm (60-13/16 in.)
Length . . . . . 1878 mm (73-15/16 in.)
Weight . . . . . 254 kg (560 lb)

Z425
Height . . . . . 980 mm (38-9/16 in.)
Width . . . . . (48 in. Deck) 1592 mm (62-11/16 in.)
Width . . . . . (54 in. Deck) 1750 mm (68-7/8 in.)
Length . . . . . 1897 mm (74-11/16 in.)
Weight . . . . . (48 in. Deck) 293 kg (645 lb)
Weight . . . . . (54 in. Deck) 299 kg (660 lb)

Z445
Height . . . . . 1080 mm (42-1/2 in.)
Width (48 in. Deck) . . . . . 1592 mm (62-11/16 in.)
Width (54 in. Deck) . . . . . 1750 mm (68-7/8 in.)
Width (54 in. High Capacity Deck) . . . . . 1730 mm (68-1/8 in.)
Length . . . . . 1897 mm (74-11/16 in.)
Weight (48 in. Deck) . . . . . 302 kg (665 lb)
Weight (54 in. Deck) . . . . . 308 kg (680 lb)
Weight (54 in. High Capacity Deck) . . . . . 331 kg (730 lb)

Z465
Height . . . . . 1150 mm (45-3/10 in.)
Width . . . . . 1920 mm (75-9/16 in.)
Length . . . . . 1928 (75-7/8 in.)
Weight . . . . . 340.2 kg (750 lb)

Mower Decks

42 Edge™ Mower
Cutting Width . . . . . 1.07 m (42 in.)
Blades-Rotary 2
Blade Nut Torque . . . . . 88 N•m (65 lb-ft)
Cutting Height (Approximately) . . . . . 25 - 102 mm (1 - 4 in.)

48 Edge™ Mower (Z245)
Cutting Width . . . . . 1.22 m (48 in.)
Blades-Rotary 3
Blade Bolt Torque . . . . . 88 N•m (65 lb-ft)
Cutting Height (Approximately) . . . . . 25 - 102 mm (1 - 4 in.)

48 Edge™ Mower (Z400 Series)
Cutting Width . . . . . 1.22 m (48 in.)
Blades-Rotary 3
Blade Bolt Torque . . . . . 68 N•m (50 lb-ft)
Cutting Height (Approximately) . . . . . 25 - 102 mm (1 - 4 in.)

54 Edge™ Mower
Cutting Width . . . . . 1.37 m (54 in.)
Blades-Rotary 3
Blade Bolt Torque . . . . . 68 N•m (50 lb-ft)
Cutting Height (Approximately) . . . . . 25 - 102 mm (1 - 4 in.)

54 Edge™ High Capacity Mower
Cutting Width . . . . . 1.37 m (54 in.)
Blades-Rotary 3
Blade Bolt Torque . . . . . 122 N•m (90 lb-ft)
Cutting Height (Approximately) . . . . . 25 - 102 mm (1 - 4 in.)

62 Edge™ Mower
Cutting Width . . . . . 1.57 m (62 in.)
Blades-Rotary 3
Blade Bolt Torque . . . . . 68 N•m (50 lb-ft)
Cutting Height (Approximately) . . . . . 25 - 102 mm (1 - 4 in.)

Recommended Lubricants

Engine Oil . . . . . TURF-GARD® OR PLUS-4®

Grease:
. . . . . John Deere MOLY HIGH TEMPERATURE EP GREASE
. . . . . John Deere Multi-Purpose SD Polyurea Grease
. . . . . John Deere Multi-Purpose HD Lithium Complex Grease

Transmission Oil (Z425, Z445, Z465):
. . . . . Low Viscosity Hy-Gard (J20D)

(Specifications and design subject to change without notice.)

Warranty

Product Warranty

Product warranty is provided as part of John Deere's support program for customers who operate and maintain their equipment as described in this manual.

Engine related warranties stated in this manual refer only to emissions-related parts and components of your engine. The complete engine warranty, less emission-related parts and components, is provided separately as the Limited Warranty for New John Deere Commercial & Consumer Equipment.

California and U.S. EPA Emissions Control System Warranty Statement (Small Off-Road Gas Engines)

Your Warranty Rights and Obligations

The California Air Resources Board, John Deere, and the United States Environmental Protection Agency are pleased to explain the emissions control system's warranty on your 2009 and later small off-road engine equipment. In California, new equipment that uses small off-road engines must be designed, built and equipped to meet the State's stringent anti-smog standards. John Deere must warrant the emissions control system on your small off-road engine equipment for the period listed below provided there has been no abuse, neglect or improper maintenance of your equipment.

Your emissions control system may include parts such as: carburetors or fuel-injection system, ignition system, catalytic converters, fuel tanks, valves, filters, clamps, connectors, and other associated components. Also, included may be hoses, belts, sensors and other emission-related assemblies.

Where a warrantable condition exists, John Deere will repair your small off-road engine equipment at no cost to you including diagnosis, parts and labor.

Manufacturer's Warranty Coverage:

This emissions control system is warranted for two years. If any emissions related part on your equipment is defective, the part will be repaired or replaced by John Deere.

Owner's Warranty Responsibilities:

• As the small off-road equipment owner, you are responsible for the performance of the required maintenance listed in your Operator's Manual. John Deere recommends that you retain all receipts covering maintenance on your small off-road engine equipment, but John Deere can not deny warranty solely for lack of receipts or for your failure to ensure the performance of all scheduled maintenance.

• As the small off-road engine equipment owner, you should however be aware that John Deere may deny you warranty coverage if your small off-road equipment or a part has failed due to abuse, neglect, or improper maintenance or unapproved modifications.

• You are responsible for presenting your small off-road engine equipment to an authorized John Deere Commercial and Consumer Equipment Retailer as soon as a problem exists. The warranty repairs should be completed in a reasonable amount of time, not to exceed 30 days. If you have a question regarding your warranty coverage, you should contact your John Deere Commercial and Consumer Equipment Retailer, or the John Deere Customer Contact Center at 1-800-537-8233.

General Emissions Warranty Coverage:

The warranty period begins on the date the equipment is delivered to an ultimate purchaser. John Deere warrants to the ultimate purchaser and each subsequent purchaser that the small off-road engine equipment is:

• Designed, built and equipped so as to conform to all applicable regulations adopted by the Air Resources Board;

•Designed, built and equipped so as to conform at the time of sale with applicable U.S. Environmental Protection Agency regulations under 40 CFR Part 90: and,

• Free from defects in materials and workmanship which cause such engine to fail to conform with applicable regulations for a period of two years of engine use from the date of sale to the ultimate purchaser.

Emissions Warranty Interpretation

• Any warranted part that is not scheduled for replacement as required by the maintenance instructions in the Operator's Manual is warranted for two years. If any such part fails during the period of warranty coverage it will be repaired or replaced by John Deere. Any such part repaired or replaced under warranty is warranted for the remaining warranty period.

• Any warranted part that is scheduled only for regular inspection in the maintenance instructions in the Operator's Manual is warranted for two years. A statement in the Operator's Manual to the effect of "repair or replace as necessary" does not reduce the period of warranty coverage. Any such part repaired or replaced under warranty is warranted for the remaining warranty period.

• Any warranted part that is scheduled for replacement as required maintenance in the Operator's Manual is warranted for the period of time prior to the first scheduled replacement point for that part. If the part fails prior to the first scheduled replacement, the part will be repaired or replaced by John Deere. Any such part repaired or replaced under warranty is warranted for the remainder of the period prior to the first scheduled replacement point for the part.

• Repair or replacement of any warranted part under the warranty will be performed at no charge to the owner at any authorized John Deere Commercial and Consumer Equipment Retailer.

• The owner will not be charged for diagnostic labor which leads to the determination that a warranted part is defective, provided such work is performed by John Deere.

• John Deere will repair damages to other engine components proximately caused by a failure under warranty of any emissions-related warranted part.

• Add-on or modified parts that are not exempted by the Air Resources Board may not be used. The use of any non-exempted add-on or modified parts will be grounds for disallowing a warranty claim. John Deere will not be liable to warrant failures of warranted parts caused by the use of a non-exempted add-on or modified part.

Emission Warranty Parts List

Fuel Metering System:

• Carburetor and internal parts (or fuel injection system).

• Air/fuel ratio feedback and control system.

• Cold start enrichment system.

Evaporative System:

• Fuel tank, fuel cap and tether.

• Fuel hose, line, fittings, clamps.

• Fuel pump, fuel shut-off valve.

• Fuel vapor hoses, fittings.

• Carbon canister.

• Rollover/slant valve for fuel vapor control.

Air Induction System:

• Air cleaner

• Intake manifold.

Ignition System:

• Spark plugs.

• Magneto or electronic ignition system.

• Spark advance/retard system.

Exhaust System:

• Exhaust manifold.

• Catalyst muffler.

Miscellaneous Items Used in Above Systems

• Vacuum, and temperature sensitive valves and switches.

• Electronic controls.

• Hoses, belts, connectors and assemblies.

Tire Warranty

John Deere warranty applies for tires available through the John Deere parts system. For tires not available through the John Deere parts system, the tire manufacturer's warranty applicable to your machine may not apply outside the U.S. (See your John Deere dealer for specific information.)

Limited Battery Warranty

NOTE: Applicable in North America only. For complete machine warranty, reference a copy of the John Deere warranty statement. Contact your John Deere dealer to obtain a copy.

TO SECURE WARRANTY SERVICE

The purchaser must request warranty service from a John Deere dealer authorized to sell John Deere batteries, and present the battery to the dealer with the top cover plate codes intact.

FREE REPLACEMENT

Any new battery which becomes unserviceable (not merely discharged) due to defects in material or workmanship within 90 days of purchase will be replaced free of charge. Installation costs will be covered by warranty if (1) the unserviceable battery was installed by a John Deere factory or dealer, (2) failure occurs within 90 days of purchase, and (3) the replacement battery is installed by a John Deere dealer.

PRO RATA ADJUSTMENT

Any new battery which becomes unserviceable (not merely discharged) due to defects in material or workmanship more than 90 days after purchase, but before the expiration of the applicable adjustment period, will be replaced upon payment of the battery's current list price less a pro rata credit for unused months of service. The applicable adjustment period is determined from the Warranty Code printed at the top of the battery and chart below. Installation costs are not covered by warranty after 90 days from the date of purchase.

THIS WARRANTY DOES NOT COVER

A. Breakage of the container, cover, or terminals.

B. Depreciation or damage caused by lack of reasonable and necessary maintenance or by improper maintenance.

C. Transportation, mailing, or service call charges for warranty service.

LIMITATION OF IMPLIED WARRANTIES AND PURCHASER'S REMEDIES

To the extent permitted by law, neither John Deere nor any company affiliated with it makes any warranties, representations, or promises as to the quality, performance or freedom from defect of the products covered by this warranty. IMPLIED WARRANTIES OF MERCHANTABILITY AND FITNESS FOR A PARTICULAR PURPOSE, TO THE EXTENT APPLICABLE, SHALL BE LIMITED IN DURATION TO THE APPLICABLE ADJUSTMENT PERIOD SET FORTH HERE. THE PURCHASER'S ONLY REMEDIES IN CONNECTION WITH THE BREACH OR PERFORMANCE OF ANY WARRANTY ON JOHN DEERE BATTERIES ARE THOSE SET FORTH HERE. IN NO EVENT WILL THE DEALER, JOHN DEERE OR ANY COMPANY AFFILIATED WITH JOHN DEERE BE LIABLE FOR INCIDENTAL OR CONSEQUENTIAL DAMAGES. (Note: Some states do not allow limitations on how long an implied warranty lasts or the exclusion or limitation of incidental or consequential damages. So these limitations and exclusions may not apply to you.) This warranty gives you specific legal rights, and you may also have some rights which vary from state to state.

NO DEALER WARRANTY

The selling dealer makes no warranty of it's own and the dealer has no authority to make any representation or promise on behalf of John Deere, or to modify the terms or limitations of this warranty in any way.

PRO RATA MONTHS OF ADJUSTMENT

NOTE: If your battery is not labeled with a warranty code, it is a warranty code B.

Warranty Code	Warranty Period
A	40 Months
B	36 Months
C	24 Months

Index

A

Adjusting Armrests 13
Adjusting Motion Control Levers 13
Adjusting Tracking 36
Air Cleaner Elements (20hp Briggs and Stratton), Checking and Cleaning 30
Air Cleaner Elements (Single Cylinder Briggs and Stratton), Checking and Cleaning 30
Air Cleaner Elements, Checking and Cleaning, (Twin Cylinder Kawasaki) 31
Armrests, Adjusting 13

B

Battery and Terminals, Cleaning 49
Battery, Charge and Connect at Assembly 9
Battery, Removing and Installing 48
Battery, Service Safely 48
Battery, Using Booster 49
Blades, Checking Mower 47
Blades, Servicing Mower 47
Brake Switch, Testing Park 18
Brake, Testing Park 18
Brake, Using Park 19
Bulb, Replacing Headlight 50

C

Carburetor, Adjusting 33
Cleaning Air Intake Screen 30
Controls, Operator Station 12
Customer Service 60
Cutting Height, Adjusting 14

D

Daily Operating Checklist 13
Deck Foot Plate, Removing and Installing Mower 38
Deck Level, Adjust Mower 11

E

Electrical Troubleshooting 54
Emission Compliance Period 5
Emission Control System Certification Label 5
Engine Oil 27

Engine Oil Level, Check 11
Engine Oil Level, Checking 27
Engine Oil and Filter, Changing 28
Engine Screen Guard, Cleaning 34
Engine Troubleshooting 53
Engine Warranty Maintenance Statement 26
Engine and Fuel Storage, Preparing 55
Engine, Starting the 21
Engine, Stopping the 22

F

Filter, Replacing Fuel 33
Foot Plate, Removing and Installing Mower Deck 38
Front Caster Spindles, Lubricating 26
Front Caster Wheels, Removing and Installing 51
Fuel Filter, Replacing 33
Fuel Safety 9
Fuel Storage 55
Fuel Tank, Filling 51
Fuel, Using Proper 50
Fuse, Replacing 50

G

Grease 25

H

Headlight Bulb, Replacing 50
Hour Meter, Using the 19

K

Key Switch, Using 19
Keyswitch, Using 19

L

Levers, Using the Motion Control 19
Literature, Service 59
Lubricants, Recommended 57

M

Machine, Moving by Hand 22
MachineTroubleshooting 54
Metal Surfaces, Repairing and Cleaning 52
Motion Control Levers, Adjusting 13
Motion Control Levers, Using the 19
Moving Machine by Hand 22
Mower (42 Mower), Installing 41
Mower (42 Mower), Removing 39
Mower (48 and 54 Mowers), Installing 42
Mower (48 and 54 Mowers), Removing 39
Mower (62 Mower), Removing 40
Mower (62 in.), Installing 43
Mower Blades, Checking 47
Mower Blades, Servicing 47
Mower Deck Foot Plate, Removing and Installing 38
Mower Deck Level, Adjust 11
Mower Deck Spindles, Lubricating 25
Mower Drive Belt, Replacing 44
Mower Drive Belt, Replacing (62 in. Mowers) 46
Mower Drive Belt, Replacing (Z245 48 in. Mower) 45
Mower Drive Belt, Replacing (Z400 Series 48 and 54 in. Mowers) 45
Mower Engagement Switch, Using the 19
Mower Level, Adjusting 15
Mower Troubleshooting 54
Mower Wheels, Adjusting 16
Mower, Engaging 22
Mowing Tips 24

N

Neutral Creep, Checking and Adjusting 35

O

Oil Level, Check Engine 11
Oil Level, Checking Engine 27
Oil and Filter, Changing Engine 28
Oil, Engine 27
Oil, Transmission (Z425, Z445 and Z465) 34
Operating Checklist, Daily 13

P

PTO Switch, Testing 18
Park 45
Park Brake Switch, Testing 18
Park Brake, Testing 18
Park Brake, Using 19
Parts Catalog 59
Parts, Replacement 59
Plastic And Painted Surfaces, Avoid Damage To 13
Pump Drive Belt (Z425, Z445 and Z465), Checking and Replacing 38

S

Safety Messages 6
Safety Systems, Testing 18
Safety, Tire 9
Seat Switch, Testing 18
Seat, Adjusting 13
Seat, Install 10
Service Literature 59
Spark Arrestor, Using 6
Spark Plug, Checking 32
Specifications 56
Specifications, Fuel System 56
Storage, Preparing Fuel and Engine for 55
Storage, Preparing Machine for 55
Storage, Removing Machine from 55
Storing Safety 55
Switch, Using the Mower Engagement 19

T

Technical Manual 59
Testing Safety Systems 18
Tire Pressure at Assembly, Check 10
Tire Pressure, Check 51
Tracking, Adjusting 36
Transaxle Cooling Fans (Z225), Cleaning 36
Transaxle Drive Belt (Z225 and Z245), Checking and Replacing 37
Transmission Oil (Z425, Z445 and Z465) 34
Transmission Oil Level, Checking 34, 35
Transmission Oil and Filters, Changing 35
Transmission, Checking Z225 and Z245 (See your John Deere dealer) ... 34
Transporting Machine on Trailer 23
Troubleshooting Chart 53

U

Unplugging Mower, Bagger, Material Collection System 23
Using Wash Port 23

W

Warranty Maintenance Statement, Engine 26
Warranty Registration, Refer to the Production Identification Section 2
Warranty, Product 58
Wash Port, Using 23
Wheel Assembly, Removing and Installing 51

Getting Quality Service

Service Literature

If you would like a copy of the Parts Catalog or Technical Manual for this machine call:

- **U.S. & Canada**: 1-800-522-7448.
- **All Other Regions**: Your John Deere dealer.

Parts

We recommend John Deere quality parts and lubricants, available at your John Deere dealer.

When you order parts, your John Deere dealer needs the serial number or product identification number (PIN) for your machine or attachment. These are the numbers that you recorded in the Product Identification section of this manual.

Order Service Parts Online

Visit **http://JDParts.deere.com** for your Internet connection to parts ordering and information.

Part Numbers

Item	Part Number
Mower Blades	
Z225 (42 In. Deck)	AM141031
Z245 (48 In. Deck)	AM141035
Z425, Z445 (48 In. Deck)	M145476
Z425, Z445 (54 In. Deck)	M143520
Z445 (54 In. High Capacity Deck)	M136195
Z465 (62 In. Deck)	M158112
Belts - Transmission	
Z225, Z245	M155343
Z425, Z445, Z465	M154157
Belts - Deck	
Z225 (42 In. Deck)	M154294
Z245 (48 In. Deck)	M154621
Z425, Z445 (48 In. Deck)	M154295
Z425, Z445 (54 In. Deck)	M154296
Z445 (54 In. High Capacity Deck)	M158409
Z465 (62 In. Deck)	M156261
Battery	TY25878
Air Cleaner Element (Foam)	
Z225	GY20573 (Filter Kit)
Z245, Z425	GY20575 (Filter Kit)
Z445, Z465	M140295
Air Cleaner Element (Paper)	
Z225	GY20573 (Filter Kit)
Z245, Z425	GY20575 (Filter Kit)
Z445, Z465	M150949
Oil Filter	
Z225, Z245, Z425	AM125424
Z445, Z465	AM107423
Hydraulic Filter	
Z225, Z245	N/A
Z425, Z445, Z465	AM131054
Fuel Filter	
Z225, Z245, Z425, Z445, Z465	AM116304
Spark Plug	
Z225, Z245, Z425	M78543
Z445, Z465	M805853

(Part numbers are subject to change without notice. Part numbers may be different outside the U.S.A.)

John Deere Quality Continues with Quality Service

John Deere provides a process to handle your questions or problems, should they arise, to ensure that product quality continues with your John Deere dealer's parts and service support.

Follow the steps below to get answers to any questions you may have about your product.

1. Refer to the appropriate attachment, machine or equipment operator manuals.
2. Contact your John Deere dealer with unanswered questions.
3. Call the John Deere Customer Contact Center.
   - Call 1-800-537-8233 and provide product serial number and model number.

NOTES

Service Record

Record Service Dates

Oil Change	Oil Filter Change (If Equipped)	Lubricate Machine	Air Cleaner Element Check/ Clean	Fuel Filter Change