325G Compact Track Loader

(PIN: J328658—)

JOHN DEERE

OPERATOR'S MANUAL

325G Compact Track Loader

OMT396974X19 ISSUE B5 (ENGLISH)

CALIFORNIA
Proposition 65 Warning

Diesel engine exhaust and some of its constituents are known to the State of California to cause cancer, birth defects, and other reproductive harm.

If this product contains a gasoline engine:

⚠ WARNING

The engine exhaust from this product contains chemicals known to the State of California to cause cancer, birth defects or other reproductive harm.

The State of California requires the above two warnings.

Worldwide Construction And Forestry Division

PRINTED IN U.S.A.

jdservicemanual.com

Introduction

Foreword

READ THIS MANUAL carefully to learn how to operate and service machine correctly. Personal injury or equipment damage can result if manual is not read. This manual and safety signs on the machine may also be available in other languages; see asee a John Deere dealer or other service provider to order.

THIS MANUAL SHOULD BE CONSIDERED a permanent part of the machine and should remain with machine when machine is sold.

MEASUREMENTS in this manual are given in both metric and customary U.S. unit equivalents. Use only correct replacement parts and fasteners. Metric and inch fasteners may require a specific metric or inch wrench.

RIGHT-HAND AND LEFT-HAND sides are determined by facing in the direction of forward travel.

WRITE PRODUCT IDENTIFICATION NUMBERS (P.I.N.) in the Machine Numbers section. Accurately record all the numbers to help in tracing the machine if machine is ever stolen. A dealer also needs these numbers when parts are ordered. File the identification numbers in a secure place off machine.

WARRANTY is provided as part of John Deere's support program for customers who operate and maintain their equipment as described in this manual. The warranty is explained on the warranty certificate or statement which should have been received from the dealer.

This warranty provides the assurance that John Deere backs the products where defects appear within the warranty period. In some circumstances, John Deere also provides field improvements, often without charge to the customer, even if the product is out of warranty. Should the equipment be abused, or modified to change its performance beyond the original factory specifications, the warranty will become void and field improvements may be denied. Setting fuel delivery above specifications or otherwise overpowering machines results in such action.

If current owner is not the original owner of this machine, contact an John Deere dealer or other service provider to inform them of this unit's serial number. This will help John Deere notify current owner of any issues or product improvements.

TX,FOREWORD -19-18FEB25-1/1

Manual Identification—READ THIS FIRST!

IMPORTANT: Use only supporting manuals designated for each specific machine. If incorrect manual is chosen, improper service may occur. Verify product identification number (PIN) when choosing the correct manual.

Choosing the Correct Supporting Manuals

John Deere machines are available in different machine configurations based on the various markets into which they are sold. Different supporting manuals exist for different machine configurations.

When necessary, product identification numbers are listed on the front covers of the manuals. These numbers are used to identify the correct supporting manual for the machine.

Product Identification Number

The product identification number (PIN) plate (1) is located on the right side of machine above the boom lock. Each machine has a 17-character PIN (2) shown on PIN plate.

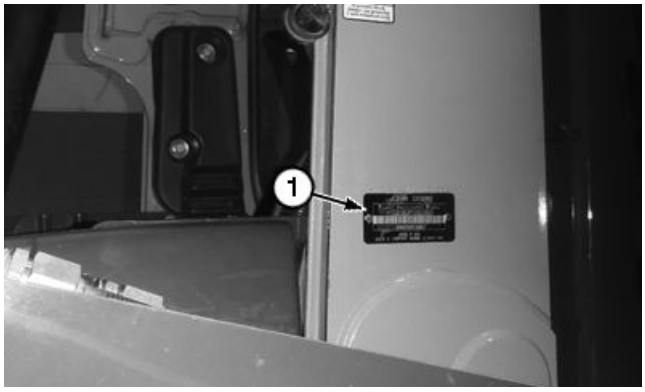

TX1140197 —UN—29JUL13

PIN Plate Location

TX1251720 —UN—01FEB18

Example of PIN Plate

1— PIN Plate **2— 17-Character PIN**

Continued on next page

JS90457,000023A -19-01FEB18-1/2

The PIN identifies the producing factory, machine model number, machine option, year of manufacture, engine emission level, and machine serial number.

The following is an example for a machine that meets Final Tier 4 and Stage IV emission levels:

17-Character PIN Examples																
1	**2**	**3**	**4**	**5**	**6**	**7**	**8**	**9**	**10**	**11**	**12**	**13**	**14**	**15**	**16**	**17**
1	T	0	3	2	5	G	_	_	_	J	1	2	3	4	5	6

- **(1—3) World Code:** Identifies location where machine is manufactured.

1T0 ..... **World Code** (manufacturing location)

1DW ..... Davenport Works

1T8 ..... Thibodaux Works

1T0 ..... Dubuque Works

1FF ..... Deere—Hitachi (Kernersville, NC, USA)

1F9..... Deere—Hitachi (Indaiatuba, São Paulo, Brazil)

- **(4—8) Machine Model and Series Identifier:** Identifies model number and series.

325G ..... **Machine Model and Series Identifier**

NOTE: Characters 7—8 identify series and major machine configuration options. These characters will change from one machine to another.

_ ..... **Machine Option Code** (variable)

A..... Single Speed

B..... 2-Speed

E..... Single Speed High Flow

F..... 2-Speed High Flow

J ..... Single Speed Electrohydraulic (EH)

K..... 2-Speed Electrohydraulic (EH)

L ..... Single Speed High Flow Electrohydraulic (EH)

M ..... 2-Speed High Flow Electrohydraulic (EH)

- **(9) Check Letter:** This is a random character assigned by the factory. This is not used in machine identification.

_ ..... **Check Letter** (variable)

- **(10) Manufacturing Year Code:** Identifies year of machine manufacture.

_ ..... **Manufacturing Year Code** (variable)

F 2015

G 2016

H 2017

I 2018

- **(11) Engine Emission Code:** Represents engine emission certification.

J ..... **Engine Emission Code**

C ..... Tier 2 and Stage II

D ..... Tier 3 and Stage III A

E ..... Interim Tier 4 and Stage III B

F ..... Final Tier 4 and Stage IV

G ..... Interim Tier 4 and Stage III A (19-56 kW)

H..... Final Tier 4 and Stage III A (19-37 kW)

J ..... Final Tier 4 and Stage III B (37-56 kW)

K..... Final Tier 4 (8-19 kW)

- **(12—17) Machine Serial Number:** Identifies machine serial number. This character will change from one machine to another.

123456 ..... **Machine Serial Number**

JS90457,000023A -19-01FEB18-2/2

IMPORTANT

Warranty will not apply to engine and drivetrain failures resulting from unauthorized adjustments to this engine.

Unauthorized adjustments are in violation of the emissions regulations applicable to this engine and may result in substantial fines and penalties.

VD76477,000104D -19-27JUN12-1/1

License Agreement for John Deere Software

LICENSE AGREEMENT FOR JOHN DEERE SOFTWARE

IMPORTANT -- READ CAREFULLY: THIS LICENSE AGREEMENT IS A LEGAL CONTRACT BETWEEN YOU AND JOHN DEERE SHARED SERVICES, INC., A CORPORATION HAVING A PRINCIPAL ADDRESS OF ONE JOHN DEERE PLACE, MOLINE, IL 61265 (THE "LICENSOR"). THIS LICENSE AGREEMENT GOVERNS YOUR USE OF ANY SOFTWARE ("SOFTWARE") AND OTHER MATERIALS (INDIVIDUALLY OR COLLECTIVELY "LICENSED MATERIALS" OR "LM") ASSOCIATED WITH ANY DISPLAY, ENGINE CONTROL UNIT, INVERTER, CONTROLLER, ELECTRONICS MODULE, SENSOR, ACTUATOR, OR COMPUTING UNIT (INDIVIDUALLY OR COLLECTIVELY "LICENSED PRODUCTS" OR "LP") OF THE JOHN DEERE EQUIPMENT THAT IS NOT OTHERWISE LICENSED BY A SEPARATE WRITTEN AGREEMENT BETWEEN YOU AND LICENSOR, OR ITS AFFILIATES.

BY ACTIVATING OR OTHERWISE USING THE LP, YOU ARE ACCEPTING AND AGREEING TO THE TERMS OF THIS LICENSE AGREEMENT WITH RESPECT TO THE LM THAT HAVE BEEN PRE-INSTALLED ON YOUR LP. YOU AGREE THAT THIS LICENSE AGREEMENT, INCLUDING THE WARRANTY DISCLAIMERS, LIMITATIONS OF LIABILITY, TERMINATION, AND ARBITRATION PROVISIONS BELOW, IS BINDING UPON YOU, AND UPON ANY COMPANY ON WHOSE BEHALF YOU USE THE LM AND LP AS WELL AS THE EMPLOYEES OF ANY SUCH COMPANY (COLLECTIVELY REFERRED TO AS "YOU" IN THIS LICENSE AGREEMENT). IF YOU DO NOT AGREE TO THE TERMS OF THIS LICENSE AGREEMENT, OR IF YOU ARE NOT AUTHORIZED TO ACCEPT THESE TERMS ON BEHALF OF YOUR COMPANY OR ITS EMPLOYEES, DECLINE THESE TERMS AND CONDITIONS AND DO NOT USE THE LP OR THE JOHN DEERE EQUIPMENT. THIS LICENSE AGREEMENT REPRESENTS THE ENTIRE AGREEMENT CONCERNING THE LM BETWEEN YOU AND THE LICENSOR AND IT REPLACES ANY PRIOR PROPOSAL, REPRESENTATION, OR UNDERSTANDING BETWEEN YOU AND THE LICENSOR.

1. **Description of Software.** Your Licensed Product ("LP") comes with all Software pre-installed for operation of your John Deere Equipment. Licensed Materials ("LM") shall mean any Software, data files, documentation, engine calibration tables, proprietary data messages, and controller area network (CAN) data messages that are in or communicated to or from any LP (e.g., to monitor, diagnose, or operate the John Deere Equipment). Data files shall include but not be limited to any data structure that adjusts engine control parameters, such as fuel metering, fuel injection rate, fuel injection timing, fuel pressure, engine speed versus torque relationship, intake boost pressure, fuel-to-air ratio or engine timing.

2. **License.** Licensor hereby grants to you, and you accept, a nonexclusive license to use the LM in machine-readable, object code form, only as authorized in this License Agreement and the applicable provisions of the Operators' Manuals, which you agree to review carefully prior to using the LM. The LM may be used only on the LP in which it was initially installed and solely in conjunction with the John Deere Equipment in which it was initially installed; or, in the event of the inoperability of that LP, on a replacement LP provided to you by an authorized dealer pursuant to the Limited Warranty of Section 5. You agree that you will not assign, sublicense, transfer, pledge, lease, rent, or share your rights under this License Agreement, except that you may permanently transfer all of your rights under this License Agreement in connection with the sale of the LP or John Deere Equipment on which the LM covered by this Agreement are installed. If you sell or otherwise transfer the ownership of the LP or John Deere Equipment, you agree that you will require such transferee to accept terms no less restrictive than those in this License Agreement. This License Agreement also covers any and all hardware and additional software that may interact with the LM and/or the LP.

3. **Licensor's Rights.** You acknowledge and agree that the LM are proprietary to Licensor, or its affiliates or licensors, and is protected under copyright law, trade secret law, and laws governing confidential information. You shall maintain the confidentiality of the LM, any nonpublic information in the LM and the source code of the Software, regardless of whether the LM is labeled or marked with any proprietary legend or notice that indicates its confidential nature. You further acknowledge and agree that all right, title, and interest in and to the Software and the LM, including associated intellectual property rights, are and shall remain with Licensor, its affiliates, and their licensors. This License Agreement does not convey to you any title or interest in or to the LM, but only a limited right of use revocable in accordance with the terms of this License Agreement.

4. **License Restrictions, Reverse Engineering.** You may not reproduce, prepare derivative works based on, disclose, publish, distribute, rent, lease, modify, loan, display, or perform the LM or any part thereof. You may not reverse engineer, decompile, translate, adapt, or disassemble the LM, nor shall you attempt to create the source code from the object code for the Software. You may not transmit the LM over any network or via a hacking device, although you may use the LM to make transmissions of diagnostic data messages that are authorized by Licensor and you may receive Software updates authorized by Licensor over any Licensor-authorized communications channel. You also agree not to permit any third party acting under your control to do any of the foregoing activities related to reverse engineering of the Licensed Materials. You agree not to remove or obliterate any copyright, trademark or other proprietary rights notices from the LM, except as expressly permitted in writing by Licensor or its licensors or expressly permitted under applicable law notwithstanding these restrictions.

5. **License Restrictions, Circumvention.**
Security measures ("SM") means any of the following: technological measures under the Digital Millennium Copyright Act, copyright protection measures, application enabling mechanisms, passwords, key codes, encryption or other security devices. You agree that you will not: (a) attempt to defeat a SM or defeat a SM that protects the LM and that would constitute a violation under applicable U.S., U.K. or German law related circumvention of technological measures that protect software, copyrighted works, or other intellectual property rights, (b) purchase, manufacture, design, import, sell or distribute any circumvention or hacking device that is designed to circumvent or hack the LM or LP and that are unlawful to distribute under applicable U.S., U.K. or German law, (c) circumvent a SM that protects the LM if the circumvention can be used to access trade secrets or confidential information that is protected under applicable law; (d) apply circumvention devices or hacking devices to the LM, LP or John Deere Equipment (e.g., to bypass, temporarily or otherwise, one or more LPs) in a manner that violates any environmental

TX1388052 —UN—07JAN25

Continued on next page

regulations, laws, safety laws, or voluntary safety standards (e.g., ISO standards) that are supported by LPs, LMs, or (e) apply any circumvention devices or hacking devices from any third parties in an attempt to reverse engineer the LM or that could be used to access trade secrets or other confidential information in the LM that is protected under applicable law. You also agree not to permit any third party acting under your control to do any of the foregoing activities related to circumvention of SM.

6. **Consideration, License Fees**. The license fees or other good and valuable consideration paid by you are paid in consideration of the licenses granted under this License Agreement.

7. **Limited Warranty**. Licensor warrants, for your benefit alone and not for the benefit of any other party, that during the "**Warranty Period**" defined below, the Software will operate substantially in accordance with the applicable functional specifications ("**Specifications**") set forth in the Operators' Manuals. If, prior to expiration of the Warranty Period, the Software fails to perform substantially in accordance with the Specifications, you may return the LP to the place of purchase for repair or replacement of the non-performing Software. As used in this License Agreement. The "Warranty Period" is one (1) year from the date you take delivery of the LP.

8. **DISCLAIMER OF WARRANTIES**. YOU HEREBY AGREE THAT THE LIMITED WARRANTY PROVIDED ABOVE (THE "**LIMITED WARRANTY**") CONSTITUTES YOUR SOLE AND EXCLUSIVE REMEDY FOR ANY PROBLEM WHATSOEVER WITH THE LM. EXCEPT AS PROVIDED IN THE LIMITED WARRANTY, THE LM IS LICENSED "AS IS," AND LICENSOR, ITS AFFILIATES AND THIRD PARTY SUPPLIERS EXPRESSLY DISCLAIM AND YOU EXPRESSLY WAIVE, RELEASE AND RENOUNCE ALL WARRANTIES ARISING BY LAW OR OTHERWISE WITH RESPECT TO THE LM, INCLUDING, BUT NOT LIMITED TO: ANY IMPLIED WARRANTY OF MERCHANTABILITY OR FITNESS FOR A PARTICULAR PURPOSE; ANY IMPLIED WARRANTY ARISING FROM COURSE OF PERFORMANCE, COURSE OF DEALING OR TRADE USAGE; ANY WARRANTY OF TITLE OR NON-INFRINGEMENT; AND, ANY OTHER WARRANTY ARISING UNDER ANY THEORY OF LAW, INCLUDING TORT, NEGLIGENCE, STRICT LIABILITY, CONTRACT OR OTHER LEGAL OR EQUITABLE THEORY. NO REPRESENTATION OR OTHER AFFIRMATION OF FACT INCLUDING, BUT NOT LIMITED TO, STATEMENTS REGARDING SUITABILITY FOR USE, SHALL BE DEEMED TO BE A WARRANTY BY LICENSOR OR ANY OF ITS AFFILIATES OR THIRD PARTY SUPPLIERS. LICENSOR DOES NOT WARRANT THAT THE LM AND/OR LP IS ERROR-FREE OR WILL OPERATE WITHOUT INTERRUPTION.

9. **LIMITATION OF LIABILITY**. EXCEPT AS SET FORTH IN THE LIMITED WARRANTY, UNDER NO CIRCUMSTANCES SHALL LICENSOR, ITS AFFILIATES OR ITS THIRD PARTY SUPPLIERS BE LIABLE TO YOU OR TO ANY THIRD PARTIES FOR DIRECT, INDIRECT, INCIDENTAL OR CONSEQUENTIAL DAMAGES OF ANY KIND, INCLUDING ANY LOSS OR DAMAGE CAUSED BY THE LM; ANY PARTIAL OR TOTAL FAILURE OF THE LM; PERFORMANCE, NONPERFORMANCE OR DELAYS IN CONNECTION WITH ANY INSTALLATION, MAINTENANCE, WARRANTY OR REPAIRS OF THE LM, DAMAGES FOR CROP LOSS, DAMAGE TO LAND, DAMAGE TO MACHINES, LOST PROFITS, LOSS OF BUSINESS OR LOSS OF GOODWILL, LOSS OF USE OF EQUIPMENT OR SERVICES OR DAMAGES TO BUSINESS OR REPUTATION ARISING FROM THE PERFORMANCE OR NON-PERFORMANCE OF ANY ASPECT OF THE SOFTWARE, LM OR LP, WHETHER IN CONTRACT, TORT OR OTHERWISE, AND WHETHER OR NOT LICENSOR, ITS AFFILIATES OR ITS THIRD PARTY SUPPLIERS HAVE BEEN ADVISED OF THE POSSIBILITY OF SUCH DAMAGES. IN NO EVENT SHALL LICENSOR'S CUMULATIVE LIABILITY TO YOU OR TO ANY OTHER PARTY FOR ANY LOSSES OR DAMAGES RESULTING FROM ANY CLAIMS, LAWSUITS, DEMANDS, OR ACTIONS ARISING FROM OR RELATING TO USE OF THE LM EXCEED YOUR TOTAL PAYMENT FOR THE LP AND FOR THE LICENSE OF THE LM.

10. **Software Maintenance**. Licensor may, at its sole option, offer you maintenance of the Software, even though the Warranty Period has expired. Such maintenance may include providing modifications, corrections or enhancements ("**Upgrades**") to the Software and/or the applicable Operators' Manuals. Licensor reserves the right, in its sole discretion, to charge you for maintenance (except in cases where corrections are provided under the Limited Warranty). Your acceptance of this License Agreement constitutes your agreement that any Upgrades will be deemed included in the Software as defined in this License Agreement and that they shall be governed by the terms and conditions applicable to the LM under this License Agreement.

11. **Termination of License**. Licensor may terminate the license granted under this License Agreement upon written notice of termination provided to you if you violate any material term of this License Agreement pertaining to your use of the LM or Licensor's rights, including, without limitation, the provisions of Sections 2 and 3 above.

12. **Compliance with Law**. You agree that you will use the LM in accordance with United States law and the laws of the country in which you are located, as applicable, including foreign trade control laws and regulations. The LM may be subject to export and other foreign trade controls restricting re-sales and/or transfers to other countries and parties. By accepting the terms of this License Agreement, you acknowledge that you understand that the LM may be so controlled, including, but not limited to, by the Export Administration Regulations and/or the foreign trade control regulations of the Treasury Department of the United States. The LM remains subject to applicable U.S. laws.

11. **Indemnification**. You agree to defend, indemnify and hold Licensor, its affiliates and third party supplier, and their, officers, directors, employees, agents and representatives (each an "**Indemnified Party**"), harmless from and against all claims, demands proceedings, injuries, liabilities, losses, or costs and expenses (including reasonable legal fees) brought by any third party against any such persons arising from or in connection with your use of the LM, regardless of whether such losses are caused, wholly or partially, by any negligence, breach of contract or other fault of an Indemnified Party.

12. **Trademark.** Licensor does not grant you any right, license, or interest to any Licensor trademarks, symbols, marks or names (collectively "Marks') or any trademarks that confusingly similar to the Marks and you agree that no such right, license, or interest shall be asserted by you with respect to such Marks.

13. **Costs of Litigation**. If any claim or action is brought by either party to this License Agreement against the other party regarding the subject matter hereof, the prevailing party shall be entitled to recover, in

TX1219046 —UN—11JUL16

Continued on next page

addition to any other relief granted, reasonable attorney, arbitrators, and dispute resolution center administrative fees and expenses of litigation.

14. **Severability and Waiver**. Should any term or provision of this License Agreement be declared void or unenforceable by any court of competent jurisdiction, such declaration shall have no effect on the remaining terms and remaining provisions hereof. The failure of either party to enforce any rights granted hereunder or to take action against the other party in the event of any breach hereunder shall not be deemed a waiver by that party as to subsequent enforcement of rights of subsequent actions in the event of future breaches.

15. **Language Clause**. Unless the laws of the location in which you reside require otherwise, the parties hereby acknowledge that they have required this License Agreement, and all other documents relating hereto, be drawn up in the English language only. There may be a translated version of this License Agreement. If there is an inconsistency or contradiction between the translated version and the English version of this License Agreement, the English version of this License Agreement shall control unless the laws of the location in which you reside require that a different version control. The parties acknowledge and agree that they have required that this agreement be prepared in the English language. Les parties reconnaissent avoir exigé que les présentes soient rédigées en langue anglaise.

16. **Assignment by Licensor**. Licensor may assign this License Agreement without your prior consent to any company or entity affiliated with Licensor, or by an assignment associated with a corporate restructuring, merger or acquisition.

17. **Governing Law and Forum**. This License Agreement will be governed by and construed in accordance with the substantive laws in force in the State of Illinois, U.S.A. The respective courts of Rock Island County, Illinois have exclusive jurisdiction over all disputes relating to this License Agreement. This License Agreement will not be governed by the conflict of law rules of any jurisdiction or the United Nations Convention on Contracts for the International Sale of Goods, the application of which is expressly excluded.

18. **Arbitration**. IF YOU RESIDE IN A JURISDICTION WHEREIN THE ENFORCEABILITY OF THE TERMS OF SECTION 17 IS DEPENDENT UPON THE PARTIES AGREEING TO SUBMIT TO ARBITRATION, THEN ANY CONTROVERSY OR CLAIM ARISING OUT OF OR RELATING TO THIS LICENSE AGREEMENT SHALL BE DETERMINED BY ARBITRATION IN ACCORDANCE WITH THE INTERNATIONAL ARBITRATION RULES OF THE INTERNATIONAL CENTRE FOR DISPUTE RESOLUTION ("**ICDR**") IN EFFECT AT THE TIME OF ITS INITIATION. THE ARBITRATION SHALL BE HELD BEFORE ONLY ONE ARBITRATOR APPOINTED BY THE ICDR. THE PLACE OF ARBITRATION SHALL BE CHICAGO, ILLINOIS, USA AND THE LANGUAGE OF THE ARBITRATION SHALL BE ENGLISH.

19. **Representations of Licensee**. BY ACCEPTING THIS AGREEMENT, YOU: (A) ACKNOWLEDGE THAT YOU HAVE READ AND UNDERSTAND THIS AGREEMENT; (B) REPRESENT THAT YOU HAVE THE AUTHORITY TO ENTER INTO THIS AGREEMENT; (C) AGREE THAT THIS AGREEMENT IS ENFORCEABLE AGAINST YOU AND ANY LEGAL ENTITY THAT OBTAINED THE LM AND ON WHOSE BEHALF IT IS USED; AND, (D) AGREE TO PERFORM THE OBLIGATIONS OF THIS AGREEMENT.

20. **Notices**. All notices to Licensor shall be sent by certified or registered mail to John Deere Shared Services, Inc., One John Deere Place, Moline, IL 61265 U.S.A. All notices to Licensor shall be effective upon receipt. All notices required to be given to you shall, in Licensor's sole discretion, either be sent via certified or registered mail to the address given to Licensor, a John Deere dealer, or another distribution partner of Licensor in connection with your purchase of the LP and/or John Deere Equipment. Either method of notification used by Licensor shall be effective upon dispatch. You agree to notify Licensor of any change in your address in the manner set forth above.

21. **Third Party Software Notifications and Licenses.** The copyrights for certain portions of the Software may be owned or licensed by other third parties ("Third Party Software") and used and distributed under license. The Third Party Notices includes the acknowledgements, notices and licenses for the Third Party Software. The Third Party Notices are included with the distribution of this License Agreement on the display. If you are unable to locate these Third Party Notices, please write to us at the address below. The Third Party Software is licensed according to the applicable Third Party Software license notwithstanding anything to the contrary in this Agreement. If the Third Party Software contains copyrighted software that is licensed under the GPL/LGPL or other copyleft licenses, copies of those licenses are included in the Third Party Notices. You may obtain the complete corresponding source code for such Third Party Software from us for a period of three years after our last shipment of the Software by sending a request letter to:

Deere Open Source Compliance Team
P.O. Box 1202
Moline, IL 61266-1202
USA

Please include name of the product and the version number of the software in the request letter. This offer is valid to anyone in receipt of this information.

TX1219047 —UN—14JUL16

TX,JDEULA -19-07JAN25-3/3

Conformity Marking for European Union (EU) and Eurasian Economic Union (EAEU)

NOTE: Some or all machine models listed on the front cover of this manual are available in optional factory configurations that meet or exceed European Union (EU) or Eurasian Economic Union (EAEU) conformity requirements.

To validate conformance of a particular machine for sale into the EU or EAEU markets, check for the applicable marking on the machine, or see an authorized John Deere dealer.

TX1219407 —UN—18JUL16

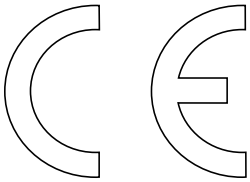

European Union (EU)

TX1219405 —UN—18JUL16

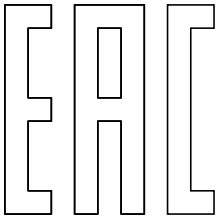

Eurasian Economic Union (EAEU)

MB60223,0000023 -19-19JUL16-1/1

Emissions Control Warranty Statement

YANMAR POWER TECHNOLOGY CO., LTD. EMISSION CONTROL SYSTEM WARRANTY - USA ONLY

Your Warranty Rights and Obligations:

The California Air Resources Board (CARB), the United State Environmental Protection Agency (EPA) and YANMAR POWER TECHNOLOGY CO., LTD. hereafter referred to as YANMAR, are pleased to explain the **emission control system warranty** on your 2022, 2023, or 2024 model year industrial compression-ignition engine. California-certified, new off-road compression-ignition engines must be designed, built and equipped to meet the State's stringent anti-smog standards. In the remaining forty nine (49) states, new non-road compression-ignition engines must be designed, built and equipped to meet the United States EPA emissions standards. YANMAR must warrant the emission control system on your engine for the periods of time listed below provided there has been no abuse, neglect or improper maintenance of your engine.

Your emission control system may include parts such as the fuel injection system, the air induction system, the electronic control system, EGR (Exhaust Gas Recirculation) system and the exhaust gas after treatment (diesel particulate filter system, urea SCR system. Also included may be hoses, belts, connectors and other emission-related assemblies.

Where a warrantable condition exists, YANMAR will repair your off-road compression-ignition engine at no charge to you including diagnosis, parts and labor.

Manufacturer's Warranty Period:

2022, 2023, or 2024 model year off-road compression-ignition engines are warranted for the periods listed below. If any emission-related part on your engine is found to be defective during the applicable warranty period, the part will be repaired or replaced by YANMAR.

If your engine is certified as	And its maximum power is	And its rated speed is	Then its warranty period is
Variable speed or constant speed	kW < 19	Any speed	1,500 hours or two (2) years whichever comes first. In the absence of a device to measure the hours of use, the engine has a warranty period of two (2) years.
Constant speed	19 ≤ kW < 37	3,000 rpm or higher	1,500 hours or two (2) years whichever comes first. In the absence of a device to measure the hours of use, the engine has a warranty period of two (2) years.
Constant speed	19 ≤ kW < 37	Less than 3,000 rpm	3,000 hours or five (5) years whichever comes first. In the absence of a device to measure the hours of use, the engine has a warranty period of five (5) years.
Variable speed	19 ≤ kW < 37	Any speed	3,000 hours or five (5) years whichever comes first. In the absence of a device to measure the hours of use, the engine has a warranty period of five (5) years.
Variable speed or constant speed	kW ≥ 37	Any speed	3,000 hours or five (5) years whichever comes first. In the absence of a device to measure the hours of use, the engine has a warranty period of five (5) years.

Warranty Period

Warranty Coverage:

This warranty is transferable to each subsequent purchaser for the duration of the warranty period. YANMAR recommends that repair or replacement of any warranted part will be performed at an authorized YANMAR dealer.

Warranted parts not scheduled for replacement as required maintenance in the owner's manual shall be warranted for the warranty period. Warranted parts scheduled for replacement as required maintenance in the owner's manual are warranted for the period of time prior to the first scheduled replacement. Any warranted parts scheduled for replacement as required maintenance that are repaired or replaced under warranty shall be warranted for the remaining period of time prior to the first scheduled replacement. Any part not scheduled for replacement that is repaired or replaced under warranty shall be warranted for the remaining warranty period.

During the warranty period, YANMAR is liable for damages to other engine components caused by the failure of any warranted part during the warranty period.

Continued on next page

TX,ECWS,YANMAR,1 -19-18MAY22-1/2

jservicemanual.com

Any replacement part which is functionally identical to the original equipment part in all respects may be used in the maintenance or repair of your engine, and shall not reduce YANMAR's warranty obligations. Add-on or modified parts that are not exempted may not be used. The use of any non-exempted add-on or modified parts shall be grounds for disallowing a warranty.

Warranted Parts:

This warranty covers engine components that are a part of the emission control system of the engine as delivered by YANMAR to the original retail purchaser. Such components may include the following:

(A) Fuel injection system (including Altitude compensation system)

(B) Cold start enrichment system

(C) Intake manifold and Air intake throttle valve

(D) Turbocharger systems

(E) Exhaust manifold and exhaust throttle valve

(F) Positive crankcase ventilation system

(G) Charge Air Cooling systems

(H) Exhaust Gas Recirculation (EGR) systems

(I) Exhaust gas after treatment (diesel particulate filter DPF system, urea SCR system)

(J) Electronic Control units, sensors, solenoids and wiring harnesses used in above systems

(K) Hoses, belts, connectors and assemblies used in above systems

(L) Emission Control Information Labels

Since emissions related parts may vary slightly between models, certain models may not contain all of these parts and other models may contain the functional equivalents.

Exclusions:

Failures other than those arising from defects in material or workmanship are not covered by this warranty. The warranty does not extend to the following: malfunctions caused by abuse, misuse, improper adjustment, modification, alteration, tampering, disconnection, improper or inadequate maintenance, or use of non-recommended fuels and lubricating oils; accident-caused damage and replacement of expendable items made in connection with scheduled maintenance. YANMAR disclaims any responsibility for incidental or consequential such as loss of time, inconvenience, loss of use of equipment/engine or commercial loss.

Owner's Warranty Responsibilities:

As the off-road compression-ignition engine owner, you are responsible for the performance of the required maintenance listed in your owner's manual. YANMAR recommends that you retain all documentation, including receipts, covering maintenance on your off-road compression-ignition engine, but YANMAR cannot deny warranty solely for the lack of receipts, or for your failure to ensure the performance of all scheduled maintenance.

YANMAR may deny your warranty coverage if your off-road compression-ignition engine or a part has failed due to abuse, neglect, improper maintenance or unapproved modifications.

Your engine is designed to operate on diesel fuel only. Use of any other fuel may result in your engine no longer operating in compliance with CARB and EPA emissions requirements.

You are responsible for initiating the warranty process. You are responsible for presenting your engine to an authorized YANMAR dealer or distributor as soon as a problem exists. The warranty repairs should be completed by the dealer as expeditiously as possible. If you have any questions regarding your warranty rights and responsibilities, or would like information on the nearest YANMAR dealer or authorized service center, you should contact YANMAR America Corporation.

Website: https://www.yanmar.com
E-mail: CS_support@yanmar.com
Toll free telephone number: 1-800-872-2867, 1-855-416-7091

What the Emergency Stationary Type Engine Owner must Do:

The engines for emergency stationary type generators certified by Federal Law (40 CFR Part60) are limited to emergency use only, and the operation for maintenance checks and verification test for functions is required. The total operating hours for maintenance and verification test for functions should not exceed 100 hours per year. However, there is no limitation on the operating hours for emergency use. Keep a log of the number of hours the engine is operated for both emergency use and non-emergency use. Also, note the reason for the operation.

TX,ECWS,YANMAR,1 -19-18MAY22-2/2

jlservicemanual.com

Emissions Performance and Tampering

Operation and Maintenance

The engine, including the emissions control system, shall be operated, used, and maintained in accordance with the instructions provided in this manual to maintain the emissions performance of the engine within the requirements applicable to the engine's category/certification.

Tampering

No deliberate tampering with or misuse of the engine emissions control system shall take place; in particular with regard to deactivating or not maintaining an exhaust gas recirculation (EGR) or a DEF dosing system. Tampering with an engine's emissions control system will void the European Union (EU) type approval and applicable emissions-related warranties.

DX,EMISSIONS,PERFORM -19-12JAN18-1/1

jdservicemanual.com

Carbon Dioxide Emissions (CO_2)

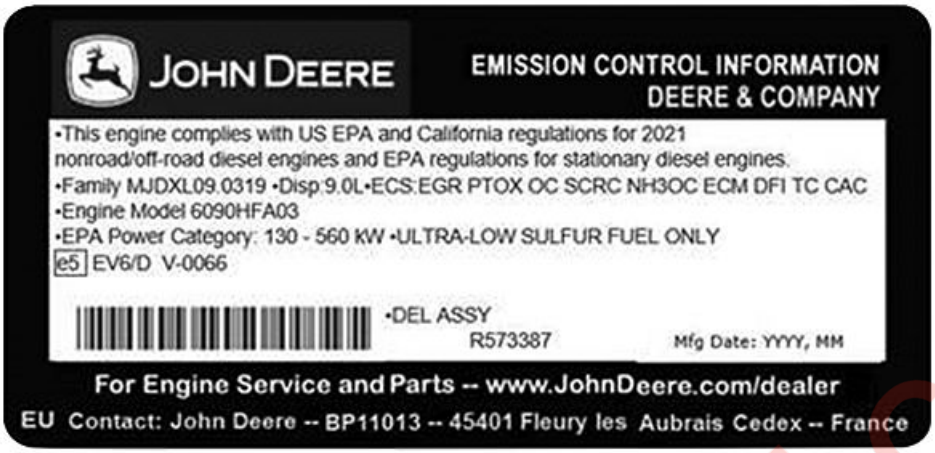

RG33429 —UN—04FEB21

SAMPLE - Engine Emissions Label

To identify the carbon dioxide (CO_2) output, locate the engine emissions label. Find the appropriate family on the emissions label and reference the chart.

NOTE: The first letter of the family number is not utilized for family identification on the chart.

Emissions Label Family	CO_2 Result
_JDXL02.9323	952 g/kW-hr
_JDXL02.9327	784 g/kW-hr
_JDXL04.5337	819 g/kW-hr
_JDXL04.5338	682 g/kW-hr
_JDXL04.5304	1004 g/kW-hr
_JDXN04.5174	792 g/kW-hr
_JDXL06.8324	720 g/kW-hr
_JDXL06.8328	683 g/kW-hr
_JDXL06.8336	701 g/kW-hr
_JDXN06.8175	771 g/kW-hr
_JDXL09.0319	646 g/kW-hr
_JDXL09.0325	695 g/kW-hr
_JDXL09.0329	657 g/kW-hr
_JDXL09.0333	650 g/kW-hr
_JDXL13.5326	684 g/kW-hr
_JDXL13.6320	651 g/kW-hr
_JDXL13.5340	632 g/kW-hr
_JDXL18.0341	683 g/kW-hr
_JDXL18.0342	687 g/kW-hr
F28	870 g/kW-hr
F32	710 g/kW-hr
F33	677 g/kW-hr

This CO_2 measurement results from testing over a fixed test cycle under laboratory conditions a(n) (parent) engine representative of the engine type (engine family) and shall not imply or express any guarantee of the performance of a particular engine.

Continued on next page

DX,EMISSIONS,CO2 -19-23JUN23-1/2

jdservicemanual.com

FCC Notifications to User

FCC Notification

These devices comply with Part 15 of the FCC Rules. Operation is subject to the following two conditions: (1) These devices may not cause harmful interference, and (2) these devices must accept any interference received, including interference that may cause undesired operation.

These devices must be operated as supplied by John Deere Ag Management Solutions. Any changes or modifications made to these devices without the express written approval of John Deere Ag Management Solutions may void the user's authority to operate these devices.

Modular Telematics Gateway and Satellite Module

This equipment has been tested and found to comply with the limits for Class B digital devices, pursuant to part 15 of the FCC Rules. These limits are designed to provide reasonable protection against harmful interference in a residential installation. This equipment generates, uses, and can radiate radio frequency energy, and if not installed and used in accordance with the instructions, may cause harmful interference to radio communications. However, no guarantee shall be made that interference will not occur in a particular installation. If this equipment does cause harmful interference to radio or television reception, which can be determined by turning the equipment off and on, the user is encouraged to try to correct the interference by one or more of the following measures:

- Reorient or relocate the receiving antenna.
- Increase the separation between the equipment and receiver.
- Connect the equipment into an outlet on a circuit different from that to which the receiver is connected.
- Consult the dealer or an experienced radio/TV technician for help.

MM16284,000196F -19-20FEB19-1/1

jdservicemanual.com

Service ADVISOR™ Remote (SAR)—SOFTWARE TERMS AND CONDITIONS

IMPORTANT -- READ CAREFULLY: THIS SOFTWARE LICENSE AGREEMENT IS A LEGAL CONTRACT BETWEEN YOU AND THE LICENSOR ("LICENSOR") IDENTIFIED BELOW AND GOVERNS YOUR USE OF THE SOFTWARE DELIVERED TO YOUR MACHINE (THE “MACHINE”).

BY INDICATING YOUR ACCEPTANCE ON A DISPLAY ON THE MACHINE, BY INSTALLING SOFTWARE TO THE MACHINE, OR USING SOFTWARE ON THE MACHINE, YOU ARE ACCEPTING AND AGREEING TO THE TERMS OF THIS LICENSE AGREEMENT WITH RESPECT TO THE SOFTWARE (THE "Software") THAT IS DELIVERED TO YOUR MACHINE. YOU AGREE THAT THIS SOFTWARE LICENSE AGREEMENT, INCLUDING THE WARRANTY DISCLAIMERS, LIMITATIONS OF LIABILITY AND TERMINATION PROVISIONS BELOW, IS BINDING UPON YOU, AND UPON ANY COMPANY ON WHOSE BEHALF YOU USE THE SOFTWARE AS WELL AS THE EMPLOYEES OF ANY SUCH COMPANY (COLLECTIVELY REFERRED TO AS "YOU" IN THIS SOFTWARE LICENSE AGREEMENT). IF YOU DO NOT AGREE TO THE TERMS OF THIS AGREEMENT, OR IF YOU ARE NOT AUTHORIZED TO ACCEPT THESE TERMS ON BEHALF OF YOUR COMPANY OR ITS EMPLOYEES, PLEASE CLICK THE [Decline] ICON ON THE DISPLAY ON THE MACHINE TO DECLINE THESE TERMS AND CONDITIONS. THIS LICENSE AGREEMENT REPRESENTS THE ENTIRE AGREEMENT CONCERNING THE SOFTWARE BETWEEN YOU AND THE LICENSOR.

1. Delivery of Software. Software may be delivered to your Machine by Licensor wirelessly or via an agent of Licensor, such as a dealer. If it is delivered wirelessly, you may be responsible for any data transmission fees incurred due to such delivery.

2. License. Licensor hereby grants to you, and you accept, a nonexclusive license to use the Software in machine-readable, object code form, only as authorized in this License Agreement and the applicable provisions of the Operators' Manuals, which you agree to review carefully prior to using the Software. The Software may be used only on the Machine to which it was initially delivered. You agree that you will not assign, sublicense, transfer, pledge, lease, rent, or share your rights under this License Agreement, except that you may permanently transfer all of your rights under this License Agreement in connection with the sale of the Machine on which the Software covered by this Agreement is installed.

3. Licensor's Rights. You acknowledge and agree that the Software is proprietary to Licensor and is protected under copyright law. You further acknowledge and agree that all right, title, and interests in and to the Software, including associated intellectual property rights, are and shall remain with Licensor. This License Agreement does not convey to you any title or interest in or to the Software, but only a limited right of use revocable in accordance with the terms of this License Agreement. You agree that you will not: (a) reverse assemble, reverse compile, modify, or otherwise translate the Software, or attempt to defeat the copyright protection and application enabling mechanisms therein; (b) copy or reproduce the Software; or, (b) remove or obliterate any copyright, trademark or other proprietary rights notices from the Software. You also agree not to permit any third party acting under your control to do any of the foregoing.

4. License Fees. The license fees paid by you, if any, are paid in consideration of the licenses granted under this License Agreement.

5. Limited Warranty. Licensor warrants, for your benefit alone and not for the benefit of any other party, that during the "**Warranty Period**" defined below, the Software will operate substantially in accordance with the applicable functional specifications ("**Specifications**") set forth in the Operators' Manuals. If, prior to expiration of the Warranty Period, the Software fails to perform substantially in accordance with the Specifications, you may return the Machine to the place of purchase for repair or replacement of the non-performing Software. The Warranty Period is ninety (90) days from the date of installation of the Software or the duration of the warranty period of the component of the Machine on which the Software is installed, whichever is longer. The Software Warranty Period does not affect the warranty period of the Machine itself or any component thereof.

6. DISCLAIMER OF WARRANTIES. YOU HEREBY AGREE THAT THE LIMITED WARRANTY PROVIDED ABOVE (THE "**LIMITED WARRANTY**") CONSTITUTES YOUR SOLE AND EXCLUSIVE REMEDY FOR ANY PROBLEM WHATSOEVER WITH THE SOFTWARE. EXCEPT AS PROVIDED IN THE LIMITED WARRANTY, THE SOFTWARE IS LICENSED “AS IS,” AND LICENSOR, ITS AFFILIATES AND THIRD PARTY SUPPLIERS EXPRESSLY DISCLAIM AND YOU EXPRESSLY WAIVE, RELEASE AND RENOUNCE ALL WARRANTIES ARISING BY LAW OR OTHERWISE WITH RESPECT TO THE SOFTWARE, INCLUDING, BUT NOT LIMITED TO: ANY IMPLIED WARRANTY OF MERCHANTABILITY OR FITNESS FOR A PARTICULAR PURPOSE; ANY IMPLIED WARRANTY ARISING FROM COURSE OF PERFORMANCE, COURSE OF DEALING OR TRADE USAGE; ANY WARRANTY OF TITLE OR NON-INFRINGEMENT; AND, ANY OTHER WARRANTY ARISING UNDER ANY THEORY OF LAW, INCLUDING TORT, NEGLIGENCE, STRICT LIABILITY, CONTRACT OR OTHER LEGAL OR EQUITABLE THEORY. NO REPRESENTATION OR OTHER AFFIRMATION OF FACT INCLUDING, BUT NOT LIMITED TO, STATEMENTS REGARDING SUITABILITY FOR USE, SHALL BE DEEMED TO BE A WARRANTY BY LICENSOR OR ANY OF ITS AFFILIATES OR THIRD PARTY SUPPLIERS. LICENSOR DOES NOT WARRANT THAT THE SOFTWARE IS ERROR-FREE OR WILL OPERATE WITHOUT INTERRUPTION.

Continued on next page

7. LIMITATION OF LIABILITY. EXCEPT AS SET FORTH IN THE LIMITED WARRANTY, UNDER NO CIRCUMSTANCES SHALL LICENSOR, ITS AFFILIATES OR ITS THIRD PARTY SUPPLIERS BE LIABLE TO YOU OR TO ANY THIRD PARTIES FOR DIRECT, INDIRECT, INCIDENTAL OR CONSEQUENTIAL DAMAGES OF ANY KIND, INCLUDING ANY LOSS OR DAMAGE CAUSED BY THE SOFTWARE; ANY PARTIAL OR TOTAL FAILURE OF THE SOFTWARE; PERFORMANCE, NONPERFORMANCE OR DELAYS IN CONNECTION WITH ANY INSTALLATION, MAINTENANCE, WARRANTY OR REPAIRS OF THE SOFTWARE, DAMAGES FOR CROP LOSS, DAMAGE TO LAND, LOST PROFITS, LOSS OF BUSINESS OR LOSS OF GOODWILL, LOSS OF USE OF EQUIPMENT OR SERVICES OR DAMAGES TO BUSINESS OR REPUTATION ARISING FROM THE PERFORMANCE OR NON-PERFORMANCE OF ANY ASPECT OF THIS AGREEMENT, WHETHER IN CONTRACT, TORT OR OTHERWISE, AND WHETHER OR NOT LICENSOR, ITS AFFILIATES OR ITS THIRD PARTY SUPPLIERS HAVE BEEN ADVISED OF THE POSSIBILITY OF SUCH DAMAGES. IN NO EVENT SHALL LICENSOR'S CUMULATIVE LIABILITY TO YOU OR TO ANY OTHER PARTY FOR ANY LOSSES OR DAMAGES RESULTING FROM ANY CLAIMS, LAWSUITS, DEMANDS, OR ACTIONS ARISING FROM OR RELATING TO USE OF THE SOFTWARE EXCEED YOUR TOTAL PAYMENT FOR THE MACHINE AND FOR THE LICENSE OF THE SOFTWARE.

8. Termination of License. Licensor may terminate the license granted under this Agreement upon written notice of termination provided to you if you violate any material term of this Agreement pertaining to your use of the Software or Licensor's rights, including, without limitation, the provisions of Sections 2 and 3 above.

9. Compliance with Law. You agree that you will use the Software in accordance with United States law and the laws of the country in which you are located, as applicable, including foreign trade control laws and regulations. The Software may be subject to export and other foreign trade controls restricting re-sales and/or transfers to other countries and parties. By accepting the terms of this Agreement, you acknowledge that you understand that the Software may be so controlled, including, but not limited to, by the Export Administration Regulations and/or the foreign trade control regulations of the Treasury Department of the United States. Any other provision of this Agreement to the contrary notwithstanding, you agree that the Software will not be resold, re-exported or otherwise transferred. The Software remains subject to applicable U.S. laws.

10. Indemnification. You agree to defend, indemnify and hold Licensor, its affiliates and third party supplier, and their, officers, directors, employees, agents and representatives (each an "**Indemnified Party**"), harmless from and against all claims, demands proceedings, injuries, liabilities, losses, or costs and expenses (including reasonable legal fees) brought by any third party against any such persons arising from or in connection with your use of the Software, regardless of whether such losses are caused, wholly or partially, by any negligence, breach of contract or other fault of an Indemnified Party.

11. Costs of Litigation. If any claim or action is brought by either party to this License Agreement against the other party regarding the subject matter hereof, the prevailing party shall be entitled to recover, in addition to any other relief granted, reasonable attorney fees and expenses of litigation.

12. Severability and Waiver. Should any term of this Agreement be declared void or unenforceable by any court of competent jurisdiction, such declaration shall have no effect on the remaining terms hereof. The failure of either party to enforce any rights granted hereunder or to take action against the other party in the event of any breach hereunder shall not be deemed a waiver by that party as to subsequent enforcement of rights of subsequent actions in the event of future breaches.

13. Language Clause. If you are a resident of Canada at the time you accept this Agreement, then the parties hereby acknowledge that they have required this Agreement, and all other documents relating hereto, be drawn up in the English language only. Les parties reconnaissent avoir demandé que le présent contrat ainsi que toute autre entente ou avis requis ou permis à être conclu ou donné en vertu des stipulations du présent contrat, soient rédigés en langue anglaise seulement. If you are a resident of any country other than the United States, Canada, Great Britain, Australia or New Zealand then you agree as follows: there may be a translated version of this Agreement. If there is an inconsistency or contradiction between the translated version and the English version of this Agreement, the English version of this Agreement shall control.

14. Assignment by Licensor. Licensor may assign this Agreement without your prior consent to any company or entity affiliated with Licensor, or by an assignment associated with a corporate restructuring, merger or acquisition.

15. Governing Law and Forum. This Agreement will be governed by and construed in accordance with the substantive laws identified in the table in Section 18, below The respective courts of the venue identified in the table in Section 18, below, for the location of the Machine shall have non-exclusive jurisdiction over all disputes relating to this Agreement. This Agreement will not be governed by the conflict of law rules of any jurisdiction or the United Nations Convention on Contracts for the International Sale of Goods, the application of which is expressly excluded.

16. Specific Exceptions.

Continued on next page

16.1 Limited Warranty for Users Residing in European Economic Area Countries or Switzerland. If you obtained the Software in any European Economic Area country or Switzerland, and you usually reside in such country, then Section 6 does not apply, instead, Licensor warrants that the Software provides the functionalities set forth in the Operators Manuals (the "**agreed upon functionalities**") for the Warranty Period. As used in this Section, "Warranty Period" means one (1) year. Non-substantial variation from the agreed upon functionalities shall not be considered and does not establish any warranty rights. THIS LIMITED WARRANTY DOES NOT APPLY TO SOFTWARE PROVIDED TO YOU FREE OF CHARGE, FOR EXAMPLE, UPDATES, OR SOFTWARE THAT HAS BEEN ALTERED BY YOU, TO THE EXTENT SUCH ALTERATIONS CAUSED A DEFECT. To make a warranty claim, during the Warranty Period you must return, at our expense, the Software and proof of purchase to the location where you obtained it. If the functionalities of the Software vary substantially from the agreed upon functionalities, Licensor is entitled -- by way of re-performance and at its own discretion -- to repair or replace the Software. If this fails, you are entitled to a reduction of the purchase price (reduction) or to cancel the purchase agreement (rescission). For further warranty information, please contact Licensor at the address listed in Section 18.

16.2 Limitation of Liability for Users Residing in European Economic Area Countries or Switzerland.

(a) If you obtained the Software in any European Economic Area country or Switzerland, and you usually reside in such country, then Sections 7 and 10 do not apply, Instead, Licensor's statutory liability for damages shall be limited as follows: (a) Licensor shall be liable only up to the amount of damages as typically foreseeable at the time of entering into this Agreement in respect of damages caused by a slightly negligent breach of a material contractual obligation and (b) Licensor shall not be liable for damages caused by a slightly negligent breach of a non-material contractual obligation.

(b) The aforesaid limitation of liability shall not apply to any mandatory statutory liability, in particular, to liability under the German Product Liability Act, liability for assuming a specific guarantee or liability for culpably caused personal injuries.

(c) You are required to take all reasonable measures to avoid and reduce damages, in particular to make back-up copies of the Software and your computer data subject to the provisions of this Agreement.

17. Representations of Licensee. BY ACCEPTING THIS AGREEMENT, YOU: (A) ACKNOWLEDGE THAT YOU HAVE READ AND UNDERSTAND THIS AGREEMENT; (B) REPRESENT THAT YOU HAVE THE AUTHORITY TO ENTER INTO THIS AGREEMENT; (C) AGREE THAT THIS AGREEMENT IS ENFORCEABLE AGAINST YOU AND ANY LEGAL ENTITY THAT OBTAINED THE SOFTWARE AND ON WHOSE BEHALF IT IS USED; AND, (D) AGREE TO PERFORM THE OBLIGATIONS OF THIS AGREEMENT.

18. Identification of Licensor and Notices. The Licensor is the entity identified in the table below. All notices to Licensor shall be sent by certified or registered mail to the corresponding address for the Licensor given below. In each case a copy of the notice shall also be sent to John Deere Intelligent Solutions Group, ATTN: Legal, 4140 114th Street Urbandale, IA 50322 U.S.A. All notices to Licensor shall be effective upon receipt. All notices required to be given to you shall, in Licensor's sole discretion, either be sent via certified or registered mail to the address given to Licensor in connection with your purchase of the Machine. Either method of notification used by Licensor shall be effective upon dispatch. You agree to notify Licensor of any change in your address in the manner set forth above.

Place of Purchase	Address	Governing Law	Venue
United States of America	John Deere Shared Services, Inc. One John Deere Place Moline, IL 61265 U.S.A.	State of Illinois, USA	Rock Island County, Illinois, USA
Argentina	Industrias John Deere Argentina, S.A. Casilla de Correo 80 Rosario (Santa Fe), 2000, Argentina	Province of Santa Fe, Argentina	Province of Santa Fe, Argentina
Australia or New Zealand	John Deere Limited (Australia) P.O. Box 2022 Crestmead, Queensland, Australia 4132	State of Queensland, Australia	State of Queensland, Australia
Canada	John Deere Limited 295 Hunter Road P.O. Box 1000 Grimsby, ON L9K 1M3	Province of Ontario, Canada	Province of Ontario, Canada
Chile	John Deere Water, S.A. Cerro Santa Lucia 9990 Quilicura, Santiago, Chile	Province of Santiago, Chile	Province of Santiago, Chile

Continued on next page

jdservicemanuals.com

Mexico	Industrias John Deere, S.A. de C.V. Boulevard Diaz Ordaz #500 Garza Garcia Nuevo Leon 66210, Mexico	State of Nuevo Leon, Mexico	State of Nuevo Leon, Mexico
Europe	ETIC Strassburgerallee 5 67657 Kaiserslautern, Germany	Federal Republic of Germany	Kaiserslautern, Germany
Other	The John Deere entity identified for the location of your Machine on www.JDLink.com.	The John Deere entity identified for the location of your Machine on www.JDLink.com.	The John Deere entity identified for the location of your Machine on www.JDLink.com.

OUT4001,00006C5 -19-08NOV10-4/4

John Deere Online Bookstore

The Technical Service Information Bookstore is available for John Deere Construction & Forestry, and Waratah products.

Technical information can be purchased from John Deere. Publications are available in print, PDF download, or PDF on DVD formats.

Orders can be made using one of the following:

- John Deere Technical Information Store: http://www.johndeeretechinfo.com/
- Call 1-866-213-3373
- Contact an authorized John Deere dealer

Available information includes:

- PARTS CATALOGS listing service parts available for machines with exploded view illustrations to help identify the correct parts. It is also useful in assembling and disassembling.
- OPERATOR'S MANUALS providing safety, operating, maintenance, and service information.
- TECHNICAL MANUALS outlining service information for machines. Included are specifications, illustrated assembly and disassembly procedures, hydraulic oil flow diagrams, and wiring diagrams. Some products have separate manuals for repair and diagnostic information. Some components, such as engines, are available in a separate component technical manual.

TX1213033 —UN—07APR16

John Deere Online Bookstore

- TRAINING GUIDES AND VIDEOS covering components, preventative maintenance, operation safety, and demonstration tips.

MB60223,0005117 -19-01APR22-1/1

jdservicemanual.com

Technical Information Feedback Form

We need your help to continually improve our technical publications. Please copy this page and FAX or mail your comments, ideas and improvements.

SEND TO: John Deere Dubuque Works
18600 South John Deere Road
Attn: Publications, Dept. 324
Dubuque, IA 52004-0538
USA

FAX NUMBER: 1-563-589-5800 (USA)

Publication Number:_____

Page Number:_____

Ideas, Comments:_____

Name: _____

Phone: _____

Continued on next page

TX,TM,FAX -19-03JUL01-1/2

jdservicemanual.com

Email Address: _____

THANK YOU!

TX,TM,FAX -19-03JUL01-2/2

jdservicemanual.com

Contents

Page

Safety—Safety and Operator Conveniences
Safety and Operator Convenience Features.....1-1-1

Safety—General Precautions
Information for European Union Directives and Eurasian Economic Union Technical Regulations Compliance.....1-2-1
Recognize Safety Information 1-2-2
Follow Safety Instructions.....1-2-3
Operate Only If Qualified.....1-2-3
Wear Protective Equipment.....1-2-3
Protect Against Noise.....1-2-4
Avoid Unauthorized Machine Modifications.....1-2-4
Control Pattern 1-2-4
Inspect Machine 1-2-4
Stay Clear of Moving Parts.....1-2-5
Avoid High-Pressure Fluids.....1-2-5
Avoid High-Pressure Oils 1-2-5
Work In Ventilated Area.....1-2-6
Avoid Static Electricity Risk When Refueling.....1-2-6
High Debris Applications 1-2-6
Prevent Fires, Clean Debris From Machine 1-2-7
In Case of Machine Fire 1-2-7
Prevent Battery Explosions 1-2-8
Handle Chemical Products Safely.....1-2-8
Handle Starting Fluid Safely.....1-2-8
Decommissioning — Proper Recycling and Disposal of Fluids and Components 1-2-9
Exhaust Filter Ash Handling and Disposal 1-2-9
Prepare for Emergencies.....1-2-9
Clean Debris from Machine.....1-2-10
Add Cab Guarding for Special Uses.....1-2-10

Safety—Operating Precautions
Use Steps and Handholds Correctly 1-3-1
Start Only From Operator's Seat.....1-3-1
Use and Maintain Seat Belt.....1-3-1
Prevent Unintended Machine Movement 1-3-2
Avoid Work Site Hazards.....1-3-3
Keep Riders Off Machine 1-3-3
Avoid Backover Accidents.....1-3-4
Avoid Machine Tip Over and Machine Damage.....1-3-4
Avoid Power Lines.....1-3-5
Operating on Slopes.....1-3-5
Operating or Traveling On Public Roads.....1-3-5
Inspect and Maintain ROPS 1-3-6

Page

Travel Safely.....1-3-6
Prevent Acid Burns.....1-3-7
Add and Operate Attachments Safely 1-3-7

Safety—Maintenance Precautions
Park and Prepare for Service Safely 1-4-1
Service Machines Safely 1-4-1
Service Cooling System Safely 1-4-2
Service Accumulator Systems Safely.....1-4-2
Remove Paint Before Welding or Heating.....1-4-2
Make Welding Repairs Safely 1-4-3
Drive Metal Pins Safely 1-4-3
Use Proper Lifting Equipment.....1-4-3
Clean Exhaust Filter Safely 1-4-4

Safety—Safety Signs and Other Instructions
Safety Signs and Other Instructions.....1-5-1

Operation—Operator's Station
Machine Control 2-1-1
Control Panel—Key Start 2-1-2
Control Panel—Keyless Start.....2-1-4
Sealed Switch Module (SSM).....2-1-6
Gauges and Indicators 2-1-8
Interlocking Seat Bar 2-1-9
Handle Cab Door Safely—If Equipped.....2-1-10
Cab Door—If Equipped 2-1-10
Side Windows—If Equipped.....2-1-13
Top Window.....2-1-13
Rear Window (Alternative Exit).....2-1-14
Secondary Alternative Exit 2-1-14
Fire Extinguisher Location.....2-1-16
12-Volt Power Outlet.....2-1-16
Windshield Wiper and Washer 2-1-17
Heating/Defrosting Controls—If Equipped.....2-1-17
Air Conditioner Controls—If Equipped.....2-1-18
Operator Seat.....2-1-18
Dome Light 2-1-20
Radio—If Equipped 2-1-21
Horn Button 2-1-25
Rear Camera—If Equipped 2-1-25
Beacon—If Equipped.....2-1-25

Operation—Operating the Machine
Before Starting Work 2-2-1

Continued on next page

Original Instructions. All information, illustrations and specifications in this manual are based on the latest information available at the time of publication. The right is reserved to make changes at any time without notice.

COPYRIGHT © 2025
DEERE & COMPANY
Moline, Illinois
All rights reserved.
A John Deere ILLUSTRUCTION ™ Manual
Previous Editions
Copyright © 2018, 2019, 2020, 2022,2023,2024

Page

Inspect Machine Daily Before Starting 2-2-1
Entering and Exiting Compact Track Loader.....2-2-2
Engine Break-In Period 2-2-3
Starting the Engine.....2-2-3
Cold Weather Starting 2-2-5
Engine Block Heater—If Equipped.....2-2-6
Engine Speed Control 2-2-7
Stopping the Engine 2-2-8
Required Machine Stop Warning.....2-2-8
Exhaust Filter.....2-2-10
Service ADVISOR™ Remote (SAR) Software Delivery Process 2-2-12
Boom Lock.....2-2-13
Boom Release 2-2-13
Steering—EH Controls 2-2-14
Operating Boom—EH Controls 2-2-15
Operating Bucket—EH Controls.....2-2-17
Joystick Performance Package—If Equipped 2-2-19
Transmission Response Rate (Travel and Steer)—If Equipped.....2-2-19
Switchable Controls—If Equipped 2-2-20
Hydraulic Response Rate (Boom and Bucket)—If Equipped 2-2-20
Creep Mode—If Equipped 2-2-21
Attachment Mounting System—Quik-Tatch™ 2-2-22
Auto-Idle 2-2-24
Connecting and Disconnecting Auxiliary Hydraulics.....2-2-25
Operating Auxiliary Hydraulics 2-2-26
Hydraulic System Pressure Release—EH Controls 2-2-27
Self Leveling Hydraulics—If Equipped 2-2-27
Ride Control—If Equipped.....2-2-28
High Flow Hydraulics—If Equipped.....2-2-29
Two-Speed Operation—If Equipped.....2-2-29
Loading Machine on a Trailer 2-2-30

Operation—Monitor Operation

Engagement and Monitor Unit (EMU) 2-3-1
Main Menu (EMU) 2-3-2
Auxiliary Hydraulic Override—If Equipped (EMU).....2-3-3
Exhaust Filter (EMU) 2-3-3
Exhaust Filter Auto Cleaning (EMU).....2-3-4
Exhaust Filter Parked Cleaning (EMU).....2-3-4
Courtesy Lighting (EMU) 2-3-5
Fan Reverse Interval (EMU).....2-3-5
Codes (EMU).....2-3-5
Monitor (EMU) 2-3-6
Job Timer (EMU) 2-3-6
Auto-Idle (EMU).....2-3-6
Anti-Theft—If Equipped (EMU).....2-3-7
Manual Tracking—If Equipped (EH Only) (EMU) 2-3-8
Owner Controls.....2-3-8

Page

Software Delivery (EMU).....2-3-9
Auto-Shutdown 2-3-9

Operation—Track Information

Undercarriage Component Identification.....2-4-1
Rubber Track Structure 2-4-1
Rubber Track Usage 2-4-2
Sprocket Teeth Wear.....2-4-3
Normal Break-In 2-4-4
Normal Track Wear in Dirt Conditions 2-4-4
Rubber Track—Types of Damage 2-4-5

Maintenance—Machine

Required Emission-Related Information.....3-1-1
Diesel Fuel.....3-1-1
Diesel Fuel Specifications 3-1-2
Lubricity of Diesel Fuel 3-1-2
Handling and Storing Diesel Fuel.....3-1-2
Biodiesel Fuel 3-1-3
Testing Diesel Fuel 3-1-4
Fuel Filters.....3-1-4
Minimizing the Effect of Cold Weather on Diesel Engines 3-1-5
Operating in Cold Temperature Climates 3-1-6
Operating at High Altitude 3-1-6
Diesel Engine Oil — Interim Tier 4, Final Tier 4, Stage IIIB, Stage IV, and Stage V 3-1-7
Engine Oil and Filter Service Intervals — Interim Tier 4, Final Tier 4, Stage IIIB, Stage IV, and Stage V Engines.....3-1-8
Diesel Engine Oil Service Interval for Operation at High Altitude 3-1-8
Oil Filters 3-1-9
Diesel Engine Coolant (engine without wet sleeve cylinder liners).....3-1-10
Water Quality for Mixing with Coolant Concentrate.....3-1-11
Operating in Warm Temperature Climates 3-1-11
Testing Coolant Freeze Point 3-1-12
Disposing of Coolant 3-1-12
Alternative and Synthetic Lubricants 3-1-13
Hydraulic and Hydrostatic Oil 3-1-13
Hydrostatic Planetary Gear Case Oil.....3-1-14
Multipurpose Extreme Pressure (EP) Grease 3-1-14
Lubricant Storage 3-1-14
Mixing of Lubricants.....3-1-14

Maintenance—Periodic Maintenance

Engine Identification 3-2-1
Service Machine at Specified Intervals.....3-2-2
Check Hour Meter Regularly 3-2-3
Fuel Tank.....3-2-3
Raising and Blocking Machine 3-2-4
Raising Operator's Station.....3-2-5
Opening and Closing Engine Cover 3-2-6

Continued on next page

Page

Engine Side Panels—Remove and Install.....3-2-6
Footwell Removal.....3-2-8
Fluid Analysis Program Test Kits and 3-Way Coolant Test Kit.....3-2-8
Service Intervals.....3-2-9
Required Parts.....3-2-11
Maintenance Legend.....3-2-12

Maintenance—As Required
Check and Clean Cooling Package.....3-3-1
Replace Cab Fresh Air and Recirculation Air Filters—If Equipped.....3-3-2
Check Fuel Tank Breather.....3-3-2
Replace Primary and Secondary Engine Air Filter Elements.....3-3-3
Check and Drain Primary Fuel Filter and Water Separator.....3-3-4
Drain Water and Sediment From Fuel Tank.....3-3-5
Check Accessory Drive Belt.....3-3-5
Service Exhaust Filter.....3-3-6
Check and Adjust Steering Mistracking.....3-3-6
Clean and Tighten Battery Terminals.....3-3-6

Maintenance—Every 10 Hours or Daily
Check Engine Oil Level.....3-4-1
Check Hydraulic Oil Level.....3-4-2
Check Coolant Level.....3-4-3
Lubricate Boom Linkage, Cylinder Pivot Points, and Quik-Tatch™ Linkage.....3-4-4

Maintenance—Initial Service-50 Hours
Drain and Refill Hydrostatic Planetary Gear Case Oil.....3-5-1

Maintenance—Every 50 Hours
Check and Clean Dust Unloader Valve.....3-6-1
Check Track Tension.....3-6-2

Maintenance—Every 250 Hours
Take Engine Oil Sample.....3-7-1

Maintenance—Every 500 Hours
Drain and Refill Engine Oil and Replace Filter..3-8-1
Replace Primary Fuel Filter and Water Separator.....3-8-3
Replace Final Fuel Filter.....3-8-4
Replace Hydraulic Oil Filter.....3-8-4
Take Fluid Samples.....3-8-5

Maintenance—Every 1000 Hours
Check Coolant Condition.....3-9-1
Replace Fuel Tank Breather.....3-9-1
Replace Hydraulic Oil Reservoir Breather.....3-9-2
Drain and Refill Hydraulic Oil.....3-9-3

Page

Drain and Refill Hydrostatic Planetary Gear Case Oil.....3-9-4

Maintenance—Every 1500 Hours
Check and Adjust Engine Valve Lash.....3-10-1

Maintenance—Every 6000 Hours
Drain and Refill Cooling System.....3-11-1

Miscellaneous—Machine
Clean Machine Regularly.....4-1-1
Inspect and Clean Polycarbonate Windows.....4-1-2
Bleed Fuel System.....4-1-3
Do Not Service or Adjust Injection Nozzles or High-Pressure Fuel Pump.....4-1-3
Do Not Service Control Valves, Cylinders, Pumps, or Motors.....4-1-3
Precautions for Alternator and Regulator.....4-1-4
Handling, Checking, and Servicing Batteries Carefully.....4-1-5
Using Battery Charger.....4-1-6
Using Booster Batteries—12-Volt System.....4-1-8
Removing Battery.....4-1-9
Replacing Battery.....4-1-9
Welding on Machine.....4-1-10
Keep Electronic Control Unit Connectors Clean.....4-1-10
JDLink™ Machine Monitoring System (MMS)—If Equipped.....4-1-10
Remove and Install Halogen Bulbs.....4-1-11
Remove and Install Light-Emitting Diode (LED) Lights.....4-1-12
Adding Rear Counterweights.....4-1-13
Replacing Accessory Drive Belt.....4-1-14
Replacing Seat Belt.....4-1-15
Replacing Fuses.....4-1-17
Replacing Glow Plug Fuse.....4-1-22
Track Sag General Information.....4-1-22
Hardware Torque Specifications.....4-1-22
Unified Inch Bolt and Screw Torque Values.....4-1-23
Metric Bolt and Screw Torque Values.....4-1-24

Miscellaneous—Operational Checkout
Operational Checkout.....4-2-1

Miscellaneous—Troubleshooting
Troubleshooting Procedure.....4-3-1
Engine.....4-3-2
Electrical System.....4-3-4
Hydraulic System.....4-3-6

Miscellaneous—Machine Storage
Prepare Machine for Storage.....4-4-1
Monthly Storage Procedure.....4-4-2

Continued on next page

Page

Miscellaneous—Machine Numbers

Record Product Identification Number (PIN) 4-5-1
Record Engine Serial Number.....4-5-1
Keep Proof of Ownership 4-5-1
Keep Machines Secure 4-5-1

Miscellaneous—Specifications

325G Machine Dimensions 4-6-1
325G Machine Specifications.....4-6-3
325G Drain and Refill Capacities 4-6-4
Rated Operating Capacity 4-6-4
Pallet Fork Lift Chart.....4-6-4
Eurasian Economic Union 4-6-5
Machine Design Life.....4-6-5

Safety and Operator Convenience Features

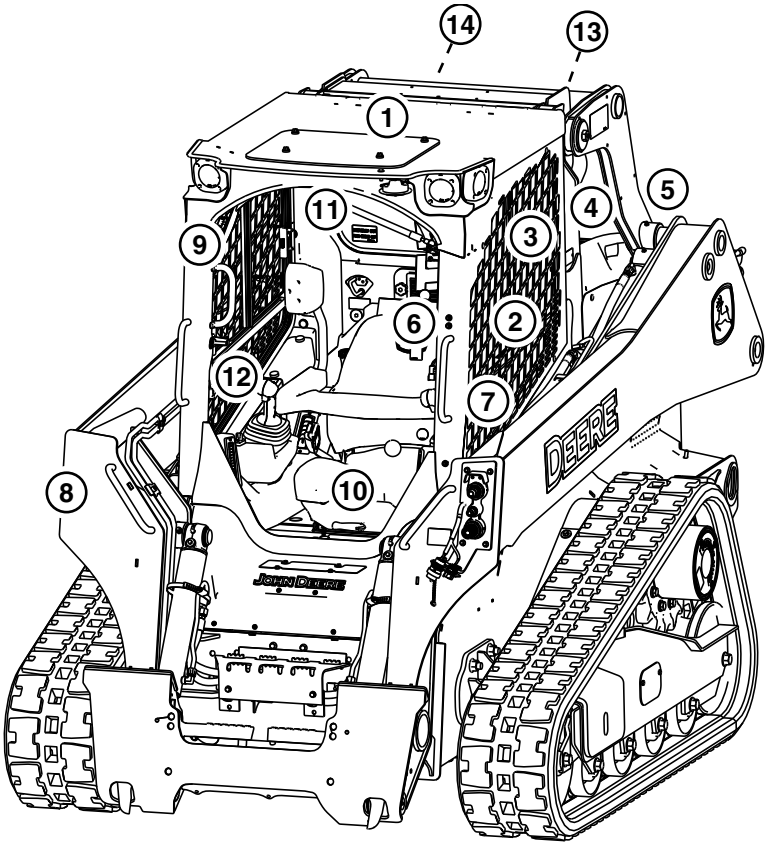

TX1248164

TX1248164 —UN—12DEC17

Safety and Operator Convenience Features

Please remember that the operator is the key to preventing accidents.

1. Roll-Over Protective Structure (ROPS)/Falling-Object Protective Structure (FOPS) Protection. Structures designed to help protect the operator are certified to ISO and OSHA. Enclosure also deflects sun and rain.

2. Window Guarding. Side screens prevent contact with a moving boom.

3. Alternative Exit. The rear window provides an exit path if the front door is blocked.

4. Bypass Start Protection. Shielding over the starter terminals helps prevent dangerous bypass starting.

5. Engine Fan Guard. Enclosing the fan fully inside the cooling package helps prevent contact with rotating fan blades.

6. Loader Boom Service Lock. A mechanical lock is provided for working on or around this machine with the boom raised.

7. Seat Belt With Automatic Retractor. Retractor helps protect the operator and keeps the belt and operator's station clean. A convenient integrated seat and shoulder belt system is also provided.

8. Handholds. Conveniently placed handholds make it easy to enter or exit the operator's station.

9. Independent Parking Brake. Electrically controlled parking brake engages whenever the engine is stopped.

10. Cab With Air Conditioner, Heater, and Defroster. Options are available.

11. Rearview Mirror. Mirror offers the operator a view of activity behind the machine.

12. Swing Out Front Door. A sealed swing out front door, which allows the cab to be pressurized, is available.

13. Rear Camera (if equipped). Displays real-time video of objects behind the machine.

14. Backup Alarm. Alerts bystanders when reverse travel direction is selected by operator.

JS90457,00001C3 -19-13FEB18-1/1

Information for European Union Directives and Eurasian Economic Union Technical Regulations Compliance

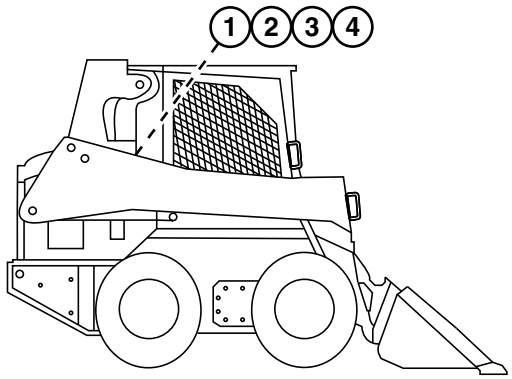

Skid Steer Loader

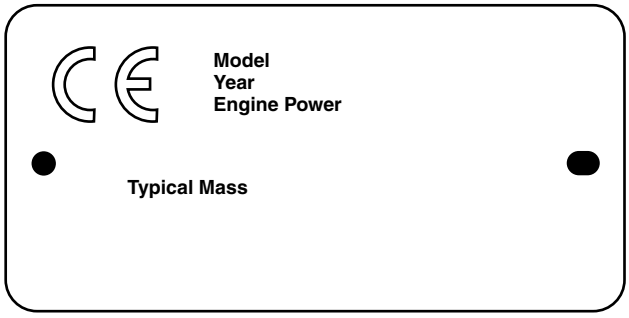

TX1213396 —UN—25APR16

TX1066144 —UN—19OCT09

CE Mark

TX1066156 —UN—15OCT09

PIN Plate

TX1252152 —UN—09FEB18

EAC Marking

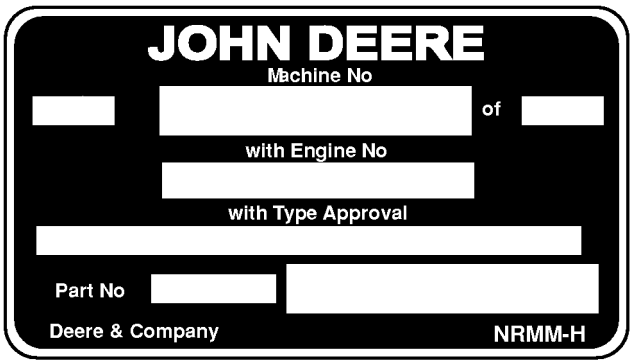

TX1066630 —UN—21OCT09

EU Flex Label

1— PIN Plate
2— CE Mark (if required)
3— EAC Marking (if required)
4— EU Flex Label (if required)

To the Customer

Effective June, 2006, all machines sold in the European Union must comply with the machinery directive 2006/42/EC and any amendments. Each machine meeting these requirements must bear the conformity mark CE. In addition, each machine must be accompanied with a Declaration of Conformity by the machine manufacturer. This declaration must be kept with the machine at all times and does not declare conformity to national road regulations.

Effective February 15, 2013, all machines sold in the Eurasian Economic Union must comply with the Technical Regulations of the Eurasian Economic Union TR TS 010/2011 “On Safety of machinery and Equipment.” Each machine meeting these requirements must bear the EAC Marking.

NOTE: This machine may need country approval for travel on public roads in Europe as some European countries require special equipment and approvals.

Product Identification Number (PIN), CE Mark, EAC Marking, and EU Flex Label Locations

The machine is identified by the PIN that is stamped on a serial number plate. The PIN plate (1), CE Mark or EAC Marking, and if required, EU flex label are located on the machine as indicated in the machine image.

Continued on next page

DB84312,000023C -19-13FEB18-1/2

NOTE: If this machine was certified (homologated) to the requirements of the European Union, there will be a CE mark affixed in indicated area (2). If required this machine will also be affixed with an EU Flex label (4) beside the CE mark in the indicated area.

If this machine was certified (homologated) to the requirements of the Eurasian Economic Union, there will be a EAC marking (3) affixed in the indicated area.

Sound and Vibration Specifications

Model	**325G**
Operator sound pressure and exterior sound power levels are:	
Cab	82 dB(A) and 105 dB(A) or less *
Canopy	88 dB(A) and 105 dB(A) or less *
NOTE: Factors affecting listed values include operator performance, machine age, seat condition, the use of accessories, environment, and any machine movement. *(*) Data acquisition system precision values with a 2% technical uncertainty.* Sound levels were obtained using the test method specified per ISO 6396:2008 and ISO 6395:2008, respectively.	
Eurasian Economic Union Operator vibration levels are for properly maintained machines operating on a flat dirt area free of large objects such as trees and rocks. Whole body vibration levels were obtained using the test method specified per GOST 31191.1:2004.	
Whole Body	0.5 m/s^2 or less
Hand Arm	2.5 m/s^2
NOTE: Factors affecting listed values include operator performance, machine age, the condition of window and door seals, the use of accessories, environment, and any machine movement.	
European Union Operator vibration levels are for properly maintained machines operating on a flat dirt area free of large objects such as trees and rocks. Vibration levels were obtained using the test method specified per ISO 2631-1:1997 or ISO TR 25398 where applicable.	
Whole Body	0.66 m/s^2 or less
Hand Arm	2.5 m/s^2
NOTE: Factors affecting listed values include operator performance, machine age, the condition of window and door seals, the use of accessories, environment, and any machine movement.	

DB84312,000023C -19-13FEB18-2/2

Recognize Safety Information

This is the safety alert symbol. When you see this symbol on your machine or in this manual, be alert for the potential of personal injury.

Follow the precautions and safe operating practices highlighted by this symbol.

A signal word — DANGER, WARNING, or CAUTION — is used with the safety alert symbol. DANGER identifies the most serious hazards.

On your machine, DANGER signs are red in color, WARNING signs are orange, and CAUTION signs are yellow. DANGER and WARNING signs are located near specific hazards. General precautions are on CAUTION labels.

DANGER

WARNING

CAUTION

T133555 —UN—15APR13

T133588 —19—28AUG00

TX,RECOGNIZE -19-03SEP24-1/1

Follow Safety Instructions

Carefully read all safety messages in this manual and on your machine safety signs. Keep safety signs in good condition. Replace missing or damaged safety signs. Use this operator's manual for correct safety sign placement. Be sure that new equipment components and repair parts include the current safety signs. Replacement safety signs are available at your John Deere dealer.

There can be additional safety information contained on parts and components sourced from suppliers that is not reproduced in this operator's manual.

Learn how to operate the machine and how to use controls properly. Do not let anyone operate without instruction.

Keep your machine in proper working condition. Unauthorized modifications to the machine could impair the function or safety and affect machine life.

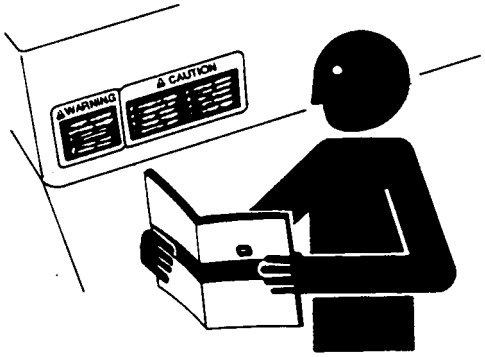

TS201 —UN—15APR13

If you do not understand any part of this manual and need assistance, contact your John Deere dealer.

TX,FOLLOW -19-30JAN24-1/1

Operate Only If Qualified

Do not operate this machine unless the operator's manual has been read carefully, and you have been qualified by supervised training and instruction.

Operator should be familiar with the job site and surroundings before operating. Try all controls and machine functions with the machine in an open area before starting to work.

Know and observe all safety rules that may apply to every work situation and work site.

TX,QUALIFIED -19-03SEP24-1/1

Wear Protective Equipment

Guard against injury from flying pieces or metal or debris; wear goggles or safety glasses.

Wear close fitting clothing and safety equipment appropriate to the job.

Operating equipment safety requires the full attention of the operator. Do not wear radio or music headphones while operating machine.

Prolonged exposure to loud noise can cause impairment or loss of hearing. Wear suitable hearing protection such as earmuffs or earplugs to protect against objectionable or uncomfortable loud noises. Radio or music headphones are not suitable to use for hearing protection.

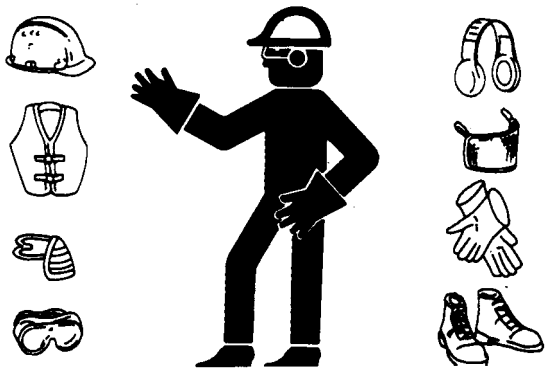

TS206 —UN—15APR13

TX,WEAR,PE -19-28AUG23-1/1

Protect Against Noise

There are many variables that affect the sound level range, including machine configuration, condition and maintenance level of the machine, ground surface, operating environmental, duty cycles, ambient noise, and attachments.

Exposure to loud noise can cause impairment or loss of hearing.

Always wear hearing protection. Wear a suitable hearing protective device such as earmuffs or earplugs to protect against objectionable or uncomfortable loud noises.

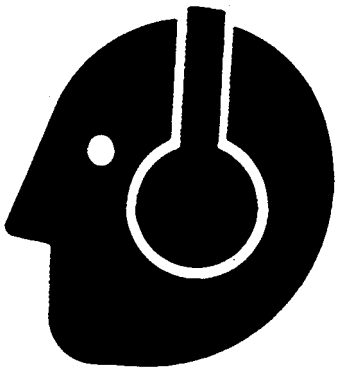

TS207 —UN—23AUG88

DX,NOISE -19-03OCT17-1/1

Avoid Unauthorized Machine Modifications

John Deere recommends using only genuine John Deere replacement parts to ensure machine performance. Never substitute genuine John Deere parts with alternate parts not intended for the application as these can create hazardous situations or hazardous performance. Non-John Deere parts, or any damage or malfunctions resulting from their use, are not covered by any John Deere warranty.

Modifications to this machine or addition of unapproved products or attachments may affect machine stability or reliability and may create a hazard for the operator or others near the machine. The installer of any modification that may affect the electronic controls of this machine is responsible for establishing that the modification does not adversely affect the machine or its performance.

Always contact an authorized dealer before making machine modifications that change the intended use, weight, or balance of the machine or that alter machine controls, performance, or reliability.

TX,AVOID,MACH,MODS -19-13SEP24-1/1

Control Pattern

The control functions are described as they are arranged when the machine leaves the factory. Some control functions can be changed to suit particular operating situations. Ensure that the operator is aware of all of the functions before operating any of the controls.

TX,CTRL,PAT -19-24FEB20-1/1

Inspect Machine

Inspect machine carefully each day by walking around it before starting.

Keep all guards and shields in good condition and properly installed. Fix damage and replace worn or broken parts immediately. Pay special attention to hydraulic hoses and electrical wiring.

T6607AQ —UN—15APR13

TX,INSPECT -19-16MAY23-1/1

Stay Clear of Moving Parts

Entanglements in moving parts can cause serious injury.

Stop engine before examining, adjusting, or maintaining any part of machine with moving parts.

Keep guards and shields in place. Replace any guard or shield that has been removed for access as soon as service or repair is complete.

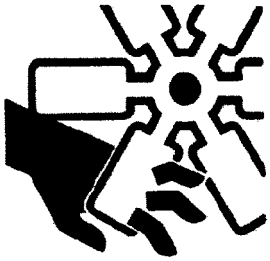

T133592 —UN—15APR13

TX,MOVING,PARTS -19-20JAN11-1/1

Avoid High-Pressure Fluids

Escaping fluid under pressure can penetrate the skin causing serious injury.

Avoid the hazard by relieving pressure before disconnecting hydraulic or other lines. Tighten all connections before applying pressure.

Search for leaks with a piece of cardboard. Protect hands and body from high-pressure fluids.

If an accident occurs, seek medical assistance immediately.

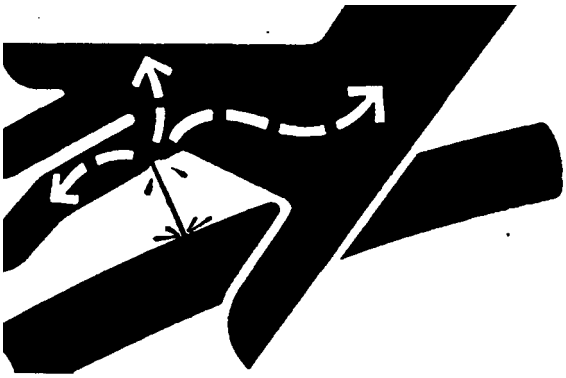

X9811 —UN—23AUG88

TX,FLUID -19-21DEC21-1/1

Avoid High-Pressure Oils

T133509 —UN—15APR13

Avoid High Pressure Oils

TX,HPOILS -19-10SEP24-1/2

This machine uses a high-pressure hydraulic system. Escaping oil under pressure can penetrate the skin causing serious injury.

Never search for leaks with your hands. Protect hands. Use a piece of cardboard to find location of escaping oil. Stop engine and relieve pressure before disconnecting lines or working on hydraulic system.

If hydraulic oil penetrates your skin, seek medical assistance immediately.

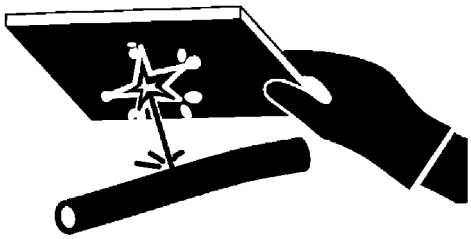

T133840 —UN—20SEP00

Avoid High Pressure Oils

TX,HPOILS -19-10SEP24-2/2

Work In Ventilated Area

Engine exhaust fumes can cause sickness or death. If it is necessary to run an engine in an enclosed area, remove the exhaust fumes from the area with an exhaust pipe extension.

If you do not have an exhaust pipe extension, open the doors and get outside air into the area.

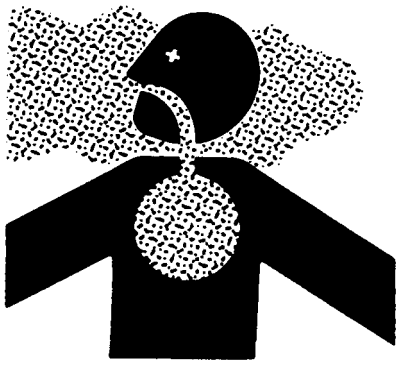

TS220 —UN—15APR13

DX,AIR -19-17FEB99-1/1

Avoid Static Electricity Risk When Refueling

The removal of sulfur and other compounds in Ultra-Low Sulfur Diesel (ULSD) fuel decreases its conductivity and increases its ability to store a static charge.

Refineries may have treated the fuel with a static dissipating additive. However, there are many factors that can reduce the effectiveness of the additive over time.

Static charges can build up in ULSD fuel while it is flowing through fuel delivery systems. Static electricity discharge when combustible vapors are present could result in a fire or explosion.

Therefore, it is important to ensure that the entire system used to refuel your machine (fuel supply tank, transfer pump, transfer hose, nozzle, and others) is properly grounded and bonded. Consult with your fuel or fuel system supplier to ensure that the delivery system is in compliance with fueling standards for proper grounding and bonding practices.

RG22142 —UN—17MAR14

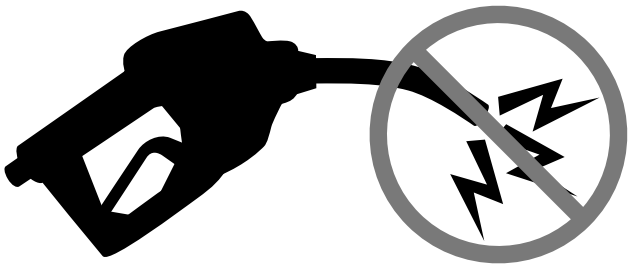

RG21992 —UN—21AUG13

DX,FUEL,STATIC,ELEC -19-12JUL13-1/1

High Debris Applications

Many operations create flammable debris such as mulching, shredding, recycling, and agricultural applications. Operating in such environments may require frequent cleaning of the machine and attachments. Frequency of cleaning will vary depending on a number of factors, including operating conditions and weather.

Flammable Debris

T133552 —UN—15APR13

TX,HIGH,DEBRIS,APP -19-06MAR22-1/1

Prevent Fires, Clean Debris From Machine

Handle Fluids Safely: All fuels, most lubricants, and some coolant mixtures are flammable. Store flammable fluids away from fire hazards. Never refuel machine while smoking or when near sparks or flame.

Clean Machine Regularly: Engine temperatures may be elevated following engine shut-down. Keep flammable debris (trash, leaves, twigs, straw, etc.), grease and oil from accumulating in or around engine compartment, radiator, batteries, fuel tank, operator station, fuel lines, hydraulic lines, exhaust components, and electrical wiring. Never store oily rags or flammable materials inside any machine compartment.

Maintain Hoses, Tubes, and Wiring: Replace hoses and tubes immediately if they begin to leak, and clean up any oil spills. Examine electrical wiring and connectors frequently for damage.

Keep a Fire Extinguisher Available: Always keep a multipurpose fire extinguisher on or near the machine. Know how to use an extinguisher properly.

Be Aware of the Operating Environment: debris may contain sparks or embers. Do not operate near any flames.

T133552 —UN—15APR13

Handle Fuel Safely

T133553 —UN—07SEP00

Clean Machine Regularly

T133554 —UN—07SEP00

Carry a Fire Extinguisher

T133555 —UN—15APR13

Caution

TX,PREVENT,FIRE -19-02NOV22-1/1

In Case of Machine Fire

CAUTION: Avoid personal injury from exposed flames. Maintain safe distance.

- Turn the engine off.
- Turn the battery disconnect switch to the OFF position (if equipped).
- If possible, fight the fire using the portable fire extinguisher or other fire suppression equipment (if equipped).
- Ensure that the fire does not spread to the surrounding area. Do not risk injury. If a fire is too far advanced, do not try to extinguish fire.
- Call for help.

TS227 —UN—15APR13

In Case of Machine Fire

TX,MACH,FIRE -19-24FEB20-1/1

Prevent Battery Explosions

Keep sparks, lighted matches, and open flame away from the top of battery. Battery gas can explode.

Never check battery charge by placing a metal object across the posts. Use a voltmeter or hydrometer.

Do not charge a frozen battery; it may explode. Warm battery to 16°C (60°F).

Keep battery electrolyte levels properly maintained.

Battery Explosions

TS204 —UN—15APR13

TX,PREVENT,BATT -19-24FEB20-1/1

Handle Chemical Products Safely

Direct exposure to hazardous chemicals can cause serious injury. Potentially hazardous chemicals used with John Deere equipment include such items as lubricants, coolants, paints, and adhesives.

A Material Safety Data Sheet (MSDS) provides specific details on chemical products: physical and health hazards, safety procedures, and emergency response techniques.

Check the MSDS before you start any job using a hazardous chemical. That way you will know exactly what the risks are and how to do the job safely. Then follow procedures and recommended equipment.

(See your John Deere dealer for MSDS's on chemical products used with John Deere equipment.)

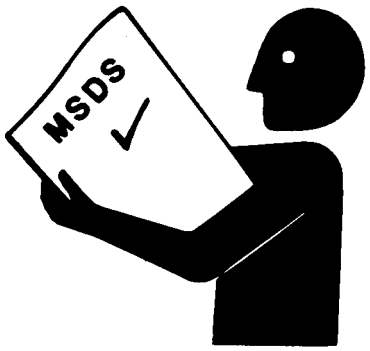

TS1132 —UN—15APR13

DX,MSDS,NA -19-03MAR93-1/1

Handle Starting Fluid Safely

Starting fluid is highly flammable.

Keep all sparks and flame away when using it. Keep starting fluid away from batteries and cables.

To prevent accidental discharge when storing the pressurized can, keep the cap on the container, and store in a cool, protected location.

Do not incinerate or puncture a starting fluid container.

Do not use starting fluid on an engine equipped with glow plugs or an air intake heater.

TS1356 —UN—18MAR92

DX,FIRE3 -19-14MAR14-1/1

Decommissioning — Proper Recycling and Disposal of Fluids and Components

Safety and environmental stewardship measures must be taken into account when decommissioning a machine and/or component. These measures include the following:

- Use appropriate tools and personal protective equipment such as clothing, gloves, face shields or glasses, during the removal or handling of objects and materials.
- Follow instructions for specialized components.
- Release stored energy by lowering suspended machine elements, relaxing springs, disconnecting the battery or other electrical power, and releasing pressure in hydraulic components, accumulators, and other similar systems.
- Minimize exposure to components which may have residue from agricultural chemicals, such as fertilizers and pesticides. Handle and dispose of these components appropriately.
- Carefully drain engines, fuel tanks, radiators, hydraulic cylinders, reservoirs, and lines before recycling components. Use leak-proof containers when draining fluids. Do not use food or beverage containers.
- Do not pour waste fluids onto the ground, down a drain, or into any water source.
- Observe all national, state, and local laws, regulations, or ordinances governing the handling or disposal of waste fluids (example: oil, fuel, coolant, brake fluid); filters; batteries; and, other substances or parts. Burning of flammable fluids or components in other than specially designed incinerators may be prohibited by law and could result in exposure to harmful fumes or ashes.
- Service and dispose of air conditioning systems appropriately. Government regulations may require a certified service center to recover and recycle air conditioning refrigerants which could damage the atmosphere if allowed to escape.
- Evaluate recycling options for tires, metal, plastic, glass, rubber, and electronic components which may be recyclable, in part or completely.
- Contact your local environmental or recycling center, or your John Deere dealer for information on the proper way to recycle or dispose of waste.

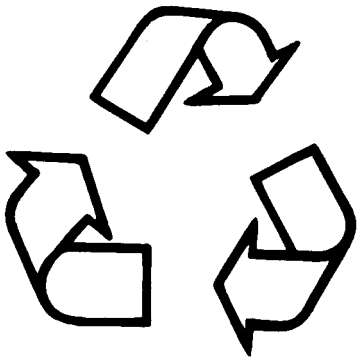

TS1133 —UN—15APR13

DX,DRAIN -19-01JUN15-1/1

Exhaust Filter Ash Handling and Disposal

CAUTION: Under federal, state, and local laws or regulations, exhaust filter ash can be classified as a hazardous waste. Hazardous waste must be disposed of in accordance with all applicable federal, state, and local laws or regulations governing hazardous waste disposal. Only a qualified service provider should remove ash from the exhaust filter. Personal protective equipment and clothing, maintained in a sanitary and reliable condition, should be used when handling and cleaning exhaust filter. See a John Deere dealer or other service provider for exhaust filter ash handling and disposal.

TX,ASH,DISP -19-29OCT24-1/1

Prepare for Emergencies

Be prepared if a fire starts.

Keep a first aid kit and fire extinguisher handy.

Keep emergency numbers for doctors, ambulance service, hospital, and fire department near your telephone.

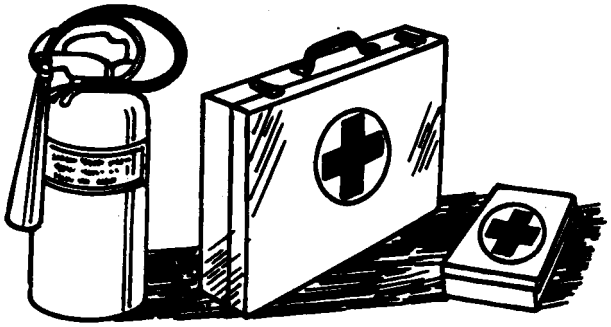

TS291 —UN—15APR13

DX,FIRE2 -19-03MAR93-1/1

Clean Debris from Machine

Keep engine compartment, radiator, batteries, hydraulic lines, exhaust components, fuel tank, and operator's station clean and free of debris.

Clean any oil spills or fuel spills on machine surfaces.

Temperature in engine compartment could go up immediately after engine is stopped. BE ON GUARD FOR FIRES DURING THIS PERIOD.

Open access door(s) to cool the engine faster, and clean engine compartment.

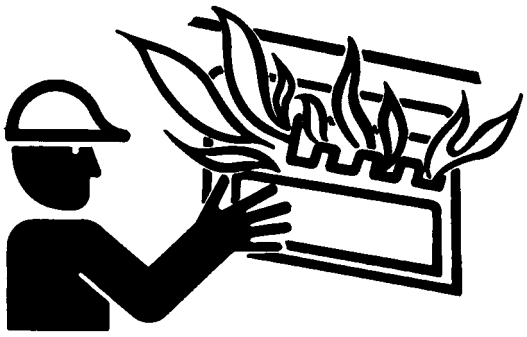

T6669AG —UN—15APR13

TX,DEBRIS -19-16MAY23-1/1

Add Cab Guarding for Special Uses

Special work situations or machine attachments could create an environment with falling or flying objects. Working near an overhead bank, demolition work, using a hydraulic hammer or winch, working in a forestry application or wooded area, or working in a waste management application, for example, could require added guarding to protect the operator.

Additional level II FOPS (falling object protective structure), forestry protection packages, and special screens or guarding should be installed when falling or flying objects could enter or damage the machine. A rear screen should always be used with a winch to protect against a snapping cable. Before operating in any special work environments, follow the operator protection recommendations of the manufacturer of any specialized attachment or equipment. Contact your authorized John Deere dealer or other service provider for information on protective guarding.

TX,CABGUARD -19-29OCT24-1/1

Use Steps and Handholds Correctly

Prevent falls by facing the machine when you get on and off. Maintain 3-point contact with steps and handrails. Never use machine controls as handholds.

Use extra care when mud, snow, or moisture present slippery conditions. Keep steps clean and free of grease or oil. Never jump when exiting machine. Never mount or dismount a moving machine.

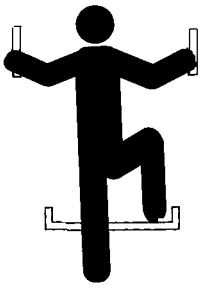

T133468 —UN—15APR13

TX,STEPS -19-09FEB11-1/1

Start Only From Operator's Seat

Avoid unexpected machine movement. Start engine only while sitting in operator's seat. Ensure that all controls and working tools are in proper position for a parked machine.

Never attempt to start engine from the ground.

TX,SOFOS -19-30OCT24-1/1

Use and Maintain Seat Belt

Use seat belt when operating machine. Remember to fasten seat belt when loading and unloading from trucks and during other uses.

CAUTION: Prevent personal injury. Check condition of seat belt and mounting hardware before operating machine. Replace if worn, frayed, or damaged.

Replace seat belt at least every 3 years, regardless of condition.

USE SEAT BELT

TX1165594 —19—23JUL14

TX,SEAT,BELT -19-27JUL20-1/1

Prevent Unintended Machine Movement

Be careful not to accidentally actuate controls. Follow these steps during work interruptions; before allowing coworkers to approach the machine; and before standing up, leaving the operator's seat, or exiting the machine:

- Lower equipment to the ground.
- If equipped with key start, press park brake switch (1) to engage park brake.
- If equipped with keyless start, press park brake switch (2) to engage park brake.
- Stop the engine.
- Raise interlocking seat bar.

1— Park Brake Switch (key start control panel)

2— Park Brake Switch (keyless start control panel)

TX1125062 —UN—31OCT12

Key Start Control Panel

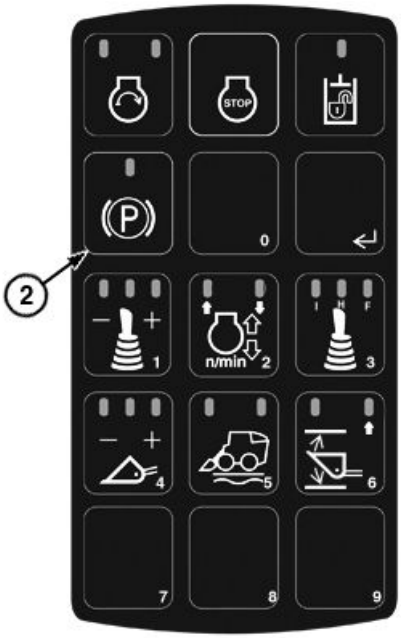

TX1248346 —UN—07DEC17

Sealed Switch Module (SSM)

JS90457,00000D1 -19-22JAN18-1/1

Avoid Work Site Hazards

Before digging, check local requirements and call utility line location services to identify and mark all underground utilities in digging area before starting work. Avoid contact with gas lines, buried cables and water lines.

Prepare work site properly. Avoid operating near structures or objects that could fall onto the machine. Clear away debris that could move unexpectedly if run over.

Avoid boom or attachment contact with overhead obstacles or overhead electrical lines. Never move machine closer than 3 m (10 ft) plus twice the line insulator length to overhead wires.

Keep bystanders clear at all times. Keep bystanders away from raised booms, attachments, and unsupported loads. Avoid swinging or raising booms, attachments, or loads over or near personnel. Use barricades or a signal person to keep vehicles and pedestrians away. Use a signal person if moving machine in congested areas or where visibility is restricted. Always keep signal person in view. Coordinate hand signals before starting machine.

Operate only on solid footing with strength sufficient to support machine. Be especially alert working near embankments or excavations.

Avoid working under overhanging embankments or stockpiles that could collapse under or on machine.

Reduce machine speed when operating with tool on or near ground when obstacles may be hidden (e.g., during snow removal or clearing mud or dirt). Hitting obstacles (rocks, uneven concrete, or manholes) at high speeds can cause a sudden stop. Always wear seat belt. On units equipped with shoulder belts, always wear both the seat and shoulder belts and **do not lean forward** while operating.

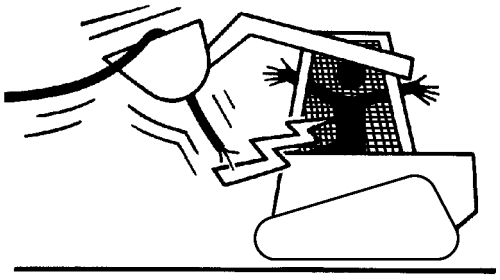

T211519 —UN—02JUN05

Contact With Electrical Lines

TX1064890 —UN—02OCT09

Operate on Solid Footing

811 Know what's below. Call before you dig.

(USA only)
1-888-258-0808
(USA & Canada)

TX1286211 —UN—03OCT19

811 Call Before You Dig

JK47244,00002C5 -19-07OCT19-1/1

Keep Riders Off Machine

Only allow operator on machine.

Riders are subject to injury. They may fall from machine, be caught between machine parts, or be struck by foreign objects.

Riders may obstruct operator's view or impair their ability to operate machine safely.

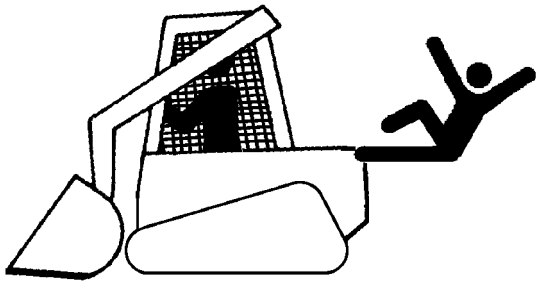

T211522 —UN—02JUN05

Keep Riders Off Machine

VD76477,0000045 -19-03SEP15-1/1

Avoid Backover Accidents

Before moving the machine, ensure that all persons are clear of the machine path. Use mirrors and cameras, if equipped, to assist in checking all around. Keep windows, mirrors and lenses clean, adjusted, and in good repair.

Verify reverse/travel warning alarm is working properly.

Use a signal person when backing if view is obstructed or when in close quarters. Keep signal person in view at all times. Use prearranged hand signals to communicate.

Do not rely solely on visibility aids (mirrors, rear camera, radar object detection system etc.), if equipped, as the only means of collision awareness.

Visibility aids may have limitations due to maintenance practices, environmental conditions, and operating range.

Avoid Backover Accidents

PC10857XW —UN—15APR13

TX,BACKOVER1 -19-20DEC21-1/1

Avoid Machine Tip Over and Machine Damage

Use seat belt at all times.

Do not jump if the machine tips. Operator is unlikely to jump clear and the machine can crush operator.

Load and unload from trucks or trailers carefully. Ensure that truck is wide enough and on a firm, level surface. Use loading ramps and attach them properly to truck bed.

Be careful on slopes. Avoid sharp turns. Balance loads so weight is evenly distributed and load is stable. To aid in visibility and lower center of gravity, carry tools and loads close to the ground. Use extra care on wet, soft, rocky, or frozen ground.

Know the capacity of the machine. Do not overload. Be careful with heavy loads. Using oversize buckets or lifting heavy objects reduces machine stability.

Ensure solid footing. Use extra care in soft ground conditions or on structures that do not uniformly support the tracks, especially when raising the boom. Do not operate close to banks or open excavations that can cave in and cause machine to tip or fall.

Use Seat Belt

T133716 —19—17APR13

Avoid Machine Tip Over

T211525 —UN—02JUN05

VD76477,0000046 -19-24JUL19-1/1

Avoid Power Lines

CAUTION: Power lines carrying more than 50 000 volts require a safety distance of 10 ft (3 m) plus 1/2 in (13 mm) for each additional 1000 volts above the 50 000 volt level.

Approach with caution areas where overhanging telephone or electric power lines are present. Serious injury or death by electrocution can result if the machine or any of its attachments are not kept a safe distance from high-voltage electric power lines.

Maintain a distance of 10 ft (3 m) between the machine, boom, stick, and any power line carrying up to 50 000 volts or less.

If state/province, local, or job site regulations require even greater safety distances than stated above, adhere strictly to these regulations for personal protection.

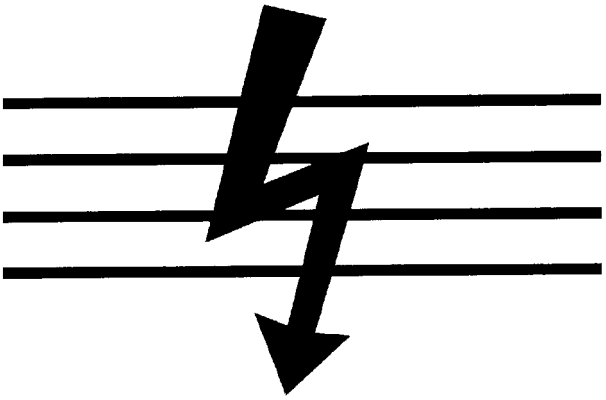

Avoid Power Lines

T147350 —UN—24OCT01

KR46761,00011B9 -19-28JUN16-1/1

Operating on Slopes

Avoid side slope travel whenever possible. When working on steep slopes, travel as straight up and down as possible and keep the heavy end of the vehicle uphill to prevent machine tip over.

Carry the load as low as possible for maximum stability and visibility.

Select low speed before starting down slope. The slope on which you can operate safely will be limited by ground condition and the load being handled.

Be alert to wind direction and velocity.

Operating On Slopes-Tracked

TX1063678 —UN—01SEP09

OUT4001,0000471 -19-25MAY18-1/1

Operating or Traveling On Public Roads

Machines that work near vehicle traffic or travel slower than normal highway speeds must have proper lighting and markings to assure they are visible to other drivers.

Install additional lights, beacon lights, slow moving vehicle (SMV) emblems, or other devices and use as required to make the machine visible and identify it as a work machine. Check state and local regulations to assure compliance. Keep these devices clean and in working condition.

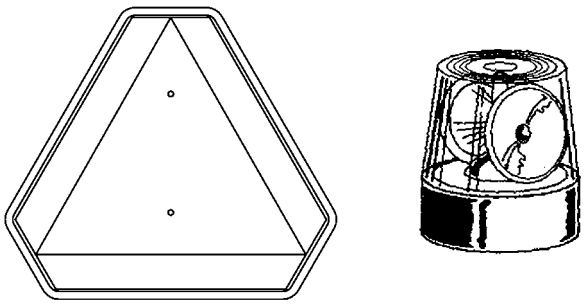

T141891 —UN—15APR13

TX,ROADS -19-20JAN11-1/1

Inspect and Maintain ROPS

A damaged rollover protective structure (ROPS) should be replaced, not reused.

The protection offered by ROPS could be impaired if ROPS is subjected to structural damage, is involved in an overturn incident, or is in any way altered by welding, bending, drilling, or cutting.

If ROPS was loosened or removed for any reason, inspect it carefully before operating the machine again.

To maintain the ROPS:

- Replace missing hardware using correct grade hardware.
- Check hardware torque.
- Check isolation mounts for damage, looseness, or wear; replace them if necessary.
- Check ROPS for cracks or physical damage.

TX,ROPS -19-20JAN11-1/1

Travel Safely

When working on steep slopes, travel as straight up and down as possible to prevent roll over.

DO NOT PARK ON A HILLSIDE OR AN INCLINE.

Always park the machine on level ground.

Know the location of bystanders before moving the machine.

Always keep the reverse/travel warning alarm in working condition. The alarm warns bystanders when the machine starts to move in reverse.

Use a signal person when moving the machine in congested areas. Coordinate hand signals before starting the machine.

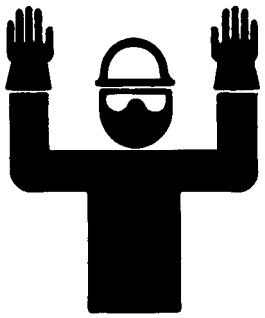

Travel Safely

T6964AD —UN—20DEC88

TX,TRAVEL,SAFE1 -19-08MAY20-1/1

Prevent Acid Burns

Sulfuric acid in battery electrolyte is poisonous. It is strong enough to burn skin, eat holes in clothing, and cause blindness if splashed into eyes.

Avoid the hazard by:

1. Filling batteries in a well-ventilated area.
2. Wearing eye protection and rubber gloves.
3. Avoiding breathing fumes when electrolyte is added.
4. Avoiding spilling or dripping electrolyte.
5. Use proper jump start procedure.

If you spill acid on yourself:

1. Flush your skin with water.
2. Apply baking soda or lime to help neutralize the acid.
3. Flush your eyes with water for 15—30 minutes. Get medical attention immediately.

If acid is swallowed:

1. Do not induce vomiting.
2. Drink large amounts of water or milk, but do not exceed 2 L (2 quarts).
3. Get medical attention immediately.

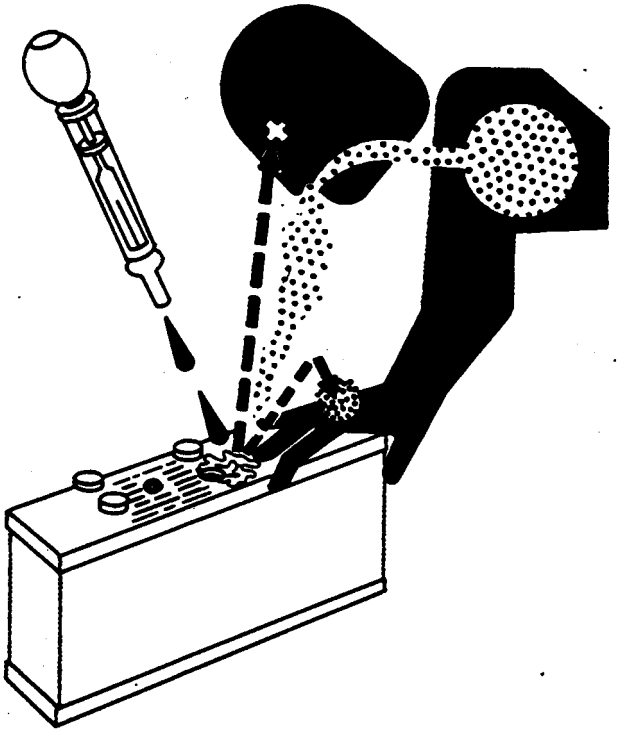

TS203 —UN—23AUG88

DX,POISON -19-21APR93-1/1

Add and Operate Attachments Safely

Always verify compatibility of attachments by contacting your authorized dealer. Adding unapproved attachments could affect machine stability or reliability and could create a hazard for others near the machine.

Ensure that a qualified person is involved in attachment installation. Add guards to machine if operator protection is required or recommended. Verify that all connections are secure and attachment responds properly to controls.

Carefully read attachment manual and follow all instructions and warnings. In an area free of bystanders and obstructions, carefully operate attachment to learn its characteristics and range of motion.

TX,ATTACH -19-20JAN11-1/1

Park and Prepare for Service Safely

Warn others of service work. Always park and prepare machine for service or repair properly.

- Do not support machine with any hydraulically actuated tools or attachments.
- Do not support machine with cinder blocks or wooden pieces that may crumble or crush.
- Do not support machine with a single jack or other devices that may slip out of place.
- Always install boom lock before working on or around this machine with the loader boom raised.
- Park machine on a level surface and lower equipment to the ground.
- Engage park brake.
- Stop engine.
- Attach a “DO NOT OPERATE” tag in an obvious place in the operator's station.

Securely support machine or attachment before working under it.

Install wheel chocks to ensure that machine cannot move backward or forward during service.

Understand service procedures before beginning repairs. Keep service area clean and dry. Use two people whenever the engine must be running for service work.

When performing above-ground maintenance, use appropriate support devices such as ladders, lifts, or platforms. If equipped, use the machine anchorage points and approved fall arrest harnesses and lanyards.

T133332 —19—17APR13

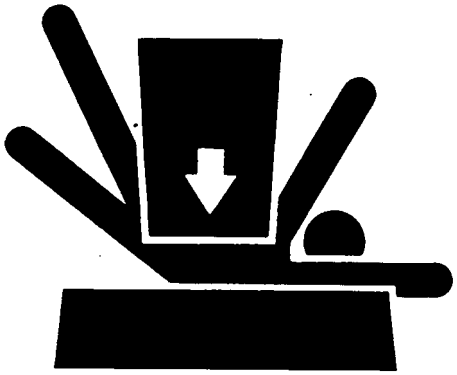

TS229 —UN—23AUG88

TX,PARK,SSL -19-21AUG20-1/1

Service Machines Safely

Tie long hair behind head. Do not wear a necktie, scarf, loose clothing, or necklace when working near machine tools or moving parts. If these items were to get caught, severe injury could result.

Remove rings and other jewelry to prevent electrical shorts and entanglement in moving parts.

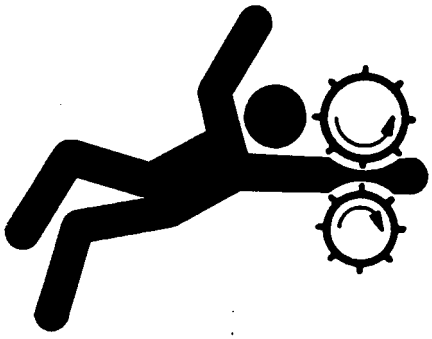

TS228 —UN—23AUG88

Service Machines Safely

TX,SERV,SAFE -19-25JUL24-1/1

Service Cooling System Safely

Explosive release of fluids from pressurized cooling system can cause serious burns.

Do not service radiator through the radiator cap. Only fill through the surge tank filler cap. Shut off engine. Only remove surge tank filler cap when cool enough to touch with bare hands. Slowly loosen cap to relieve pressure before removing completely.

TS281 —UN—15APR13

TX,SURGE -19-19JAN11-1/1

Service Accumulator Systems Safely

Escaping fluid or gas from pressurized hydraulic accumulator systems can cause serious injury. Extreme heat can cause the accumulator to burst, and pressurized lines can be accidentally cut. Do not weld or use a torch near a pressurized accumulator or pressurized line.

Relieve pressure from the hydraulic system before removing accumulator. Never attempt to relieve hydraulic system or accumulator pressure by loosening a fitting.

Accumulators cannot be repaired.

TS281 —UN—15APR13

DX,WW,ACCLA -19-15APR03-1/1

Remove Paint Before Welding or Heating

Avoid potentially toxic fumes and dust.

Hazardous fumes can be generated when paint is heated by welding, soldering, or using a torch.

Remove paint before heating:

- Remove paint a minimum of 100 mm (4 in.) from area to be affected by heating. If paint cannot be removed, wear an approved respirator before heating or welding.
- If you sand or grind paint, avoid breathing the dust. Wear an approved respirator.
- If you use solvent or paint stripper, remove stripper with soap and water before welding. Remove solvent or paint stripper containers and other flammable material from area. Allow fumes to disperse at least 15 minutes before welding or heating.

Do not use a chlorinated solvent in areas where welding will take place.

TS220 —UN—15APR13

Do all work in an area that is well ventilated to carry toxic fumes and dust away.

Dispose of paint and solvent properly.

DX,PAINT -19-24JUL02-1/1

Make Welding Repairs Safely

IMPORTANT: Disable electrical power before welding. Turn off main battery switch and disconnect positive (+) and negative (-) battery cables.

Do not weld or apply heat on any part of a reservoir or tank that has contained oil or fuel. Heat from welding and cutting can cause oil, fuel, or cleaning solution to create gases which are explosive, flammable, or toxic.

Avoid welding or heating near pressurized fluid lines. Flammable spray may result and cause severe burns if pressurized lines malfunction as a result of heating. Do not let heat go beyond work area to nearby pressurized lines.

Remove paint properly. Do not inhale paint dust or fumes. Use a qualified welding technician for structural repairs.

T133547 —UN—15APR13

Heating Near Pressurized Fluid Lines

Make sure there is good ventilation. Wear eye protection and protective equipment when welding.

TX,WELD,SAFE -19-08MAY20-1/1

Drive Metal Pins Safely

Always wear protective goggles or safety glasses and other protective equipment before striking hardened parts. Hammering hardened metal parts such as pins and bucket teeth could dislodge chips at high velocity.

Use a soft hammer or a brass bar between hammer and object to prevent chipping.

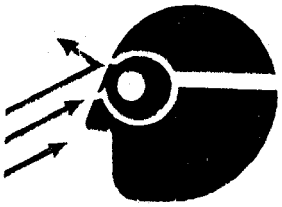

T133738 —UN—15APR13

TX,PINS -19-20JAN11-1/1

Use Proper Lifting Equipment

Lifting heavy components or attachments incorrectly can cause injury or machine damage.

Follow recommended procedure for removal and installation of components or attachments.

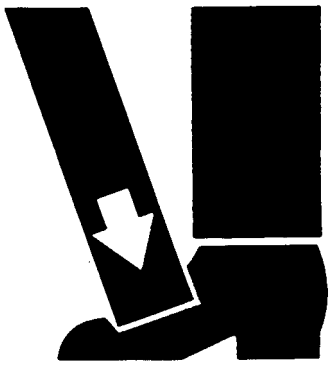

TS226 —UN—23AUG88

Proper Lifting Equipment

TX,LIFT,EQUIP -19-08MAY20-1/1

Clean Exhaust Filter Safely

During exhaust filter cleaning operations, the engine may run at elevated idle and hot temperatures for an extended period of time. Exhaust gases and exhaust filter components reach temperatures hot enough to burn people, or ignite or melt common materials.

Keep machine away from people, animals, or structures which may be susceptible to harm or damage from hot exhaust gases or components. Avoid potential fire or explosion hazards from flammable materials and vapors near the exhaust. Keep exhaust outlet away from people and anything that can melt, burn, or explode.

Closely monitor machine and surrounding area for smoldering debris during and after exhaust filter cleaning.

Adding fuel while an engine is running can create a fire or explosion hazard. Always stop engine before refueling machine and clean up any spilled fuel.

Always make sure that engine is stopped while hauling machine on a truck or trailer.

Contact with exhaust components while still hot can result in serious personal injury.

Avoid contact with these components until cooled to safe temperatures.

If service procedure requires engine to be running:

- Only engage power-driven parts required by service procedure
- Ensure that other people are clear of operator station and machine

Keep hands, feet, and clothing away from power-driven parts.

Always disable movement (neutral), set the parking brake or mechanism and disconnect power to attachments or tools before leaving the operator's station.

Shut off engine and remove key (if equipped) before leaving the machine unattended.

TS227 —UN—15APR13

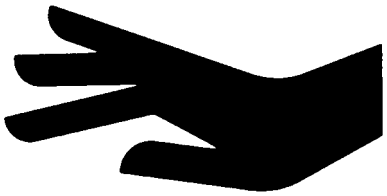

TS271 —UN—23AUG88

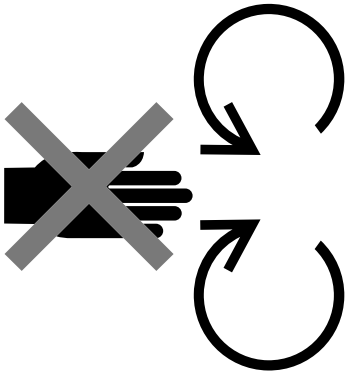

TS1693 —UN—09DEC09

TS1695 —UN—07DEC09

DX,EXHAUST,FILTER -19-12JAN11-1/1

Safety Signs and Other Instructions

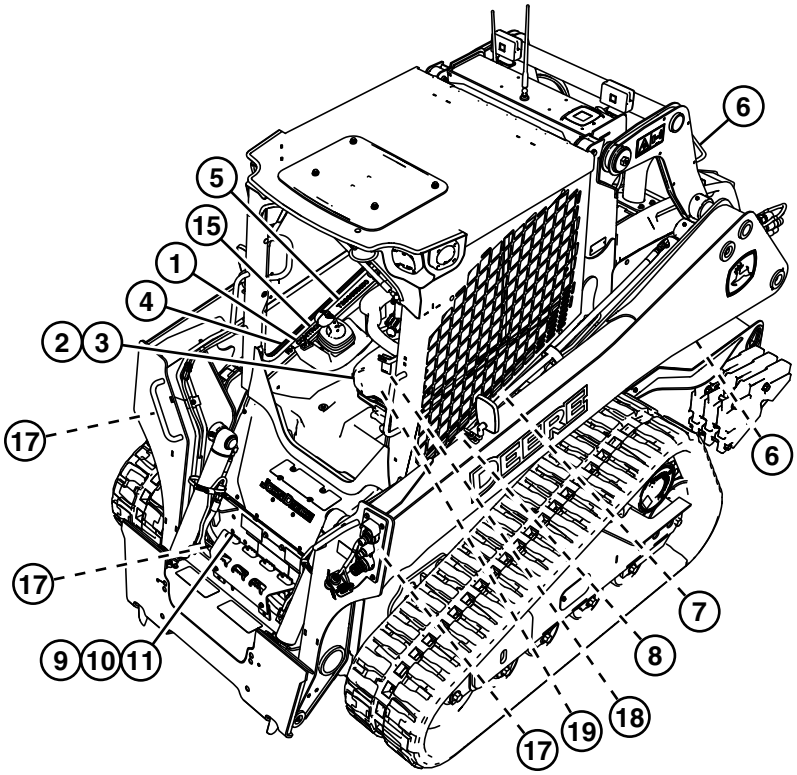

TX1275368

TX1275368 —UN—28MAR19

Safety Signs (left side shown)

1— DANGER, Avoid Serious Injury or Death
2— CAUTION, Before Raising ROPS
3— Protective Structure Certification
4— WARNING, Always Install Boom Lock
5— CAUTION, Before Operating This Machine
6— WARNING, Pinch Area Keep Away
7— CAUTION, Avoid Overturn
8— WARNING, Seat Belt Should Be Worn at All Times
9— DANGER, Avoid Crushing Injury
10— WARNING, Prevent Injury
11— WARNING, No Riders/Keep Riders Off Machine
15— CAUTION, After Raising ROPS
17— Tiedown Point
18— Secondary Alternative Exit
19— IMPORTANT, Secondary Alternative Exit Handles

Continued on next page

JS90457,00001CB -19-10APR19-1/21

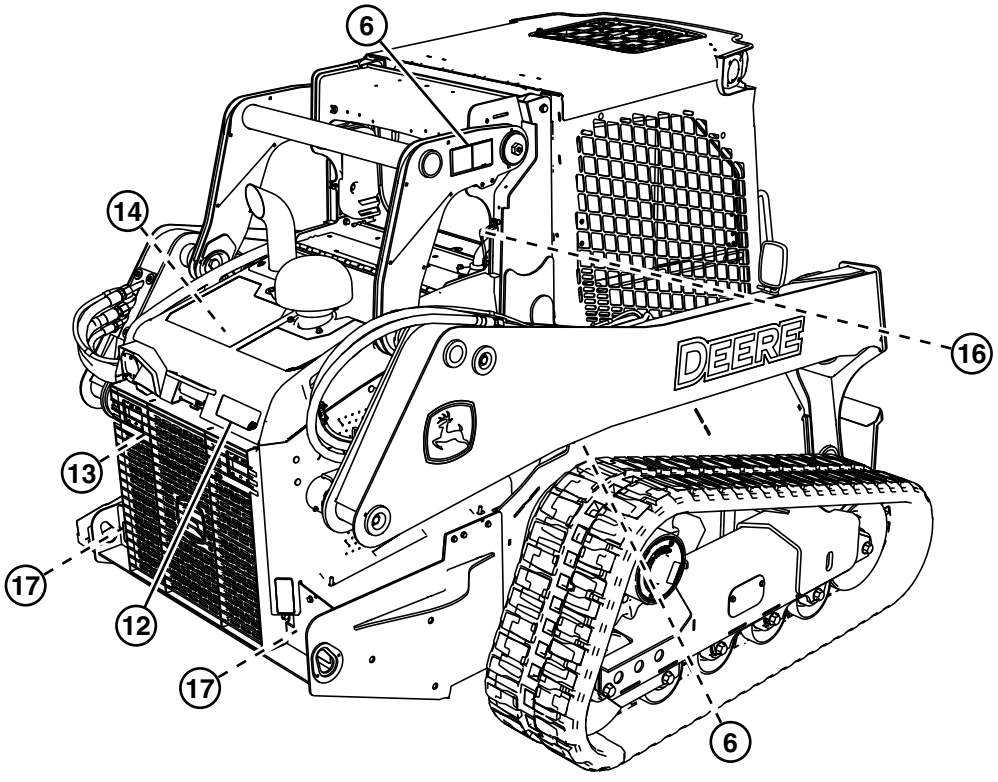

TX1251547 —UN—06FEB18

Safety Signs (right side shown)

6— WARNING, Pinch Area Keep Away
12— WARNING, Avoid Crushing Injury
13— WARNING, Avoid Rotating Fan
14— WARNING, Pressurized System
16— Alternative Exit
17— Tiedown Point

JS90457,00001CB -19-10APR19-2/21

1. **DANGER, Avoid Serious Injury or Death**

   Read and understand Operator's Manual before operating this machine.

   Before removing seat belt and leaving seat:

   - Lower boom to ground or rest boom on stops.

   - Engage park brake, stop engine, and remove key.

   This safety label is located inside the cab near the right joystick.

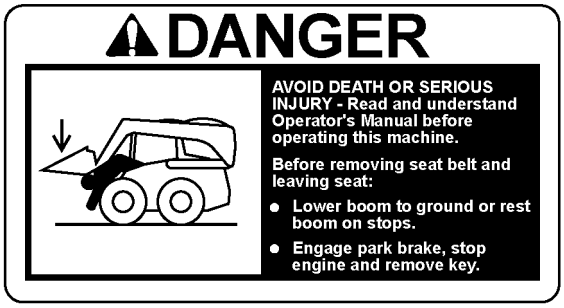

TX1125800 —19—14NOV12

DANGER, Avoid Serious Injury or Death

Continued on next page

JS90457,00001CB -19-10APR19-3/21

2. **CAUTION, Before Raising ROPS**

   Read and understand Operator Manual before raising ROPS.

   Failure to do so may cause cab to fall, causing serious injury.

   This safety label is located inside the cab behind the right joystick.

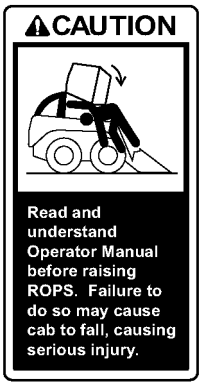

CAUTION, Before Raising ROPS

TX1143572 —19—06SEP13

JS90457,00001CB -19-10APR19-4/21

3. **Protective Structure Certification**

   To maintain unimpaired operator protection and manufacturer's protective structure certification:

   - Damaged Roll Over Protective Structure (ROPS) or Falling Object Protective Structure (FOPS) must be replaced, not repaired or revised.

   - Any alteration to the ROPS or FOPS must be approved by the manufacturer.

   This safety label is located inside the cab behind the right joystick.

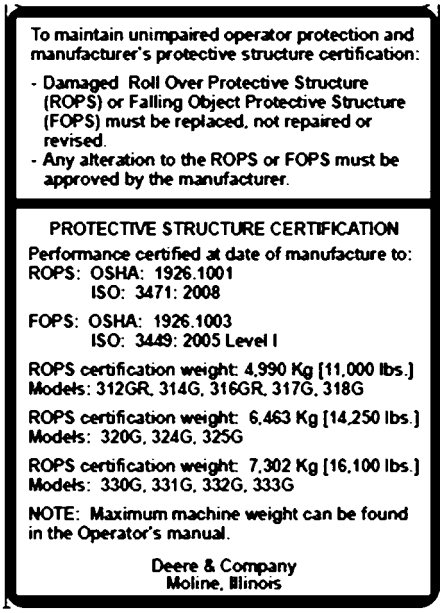

Protective Structure Certification

TX1250450 —UN—17JAN18

JS90457,00001CB -19-10APR19-5/21

4. **WARNING, Always Install boom Lock**

   Always install boom lock before working on or around this machine with the loader boom raised.

   See Operator's Manual for complete instructions.

   This safety label is located inside the cab near the right joystick.

WARNING, Always Install boom Lock

TX1125786 —19—14NOV12

Continued on next page

JS90457,00001CB -19-10APR19-6/21

5. **CAUTION, Before Operating This Machine**

AVOID INJURY - Read and understand Operator's Manual before operating this machine.

- Know location and function of controls.

- Keep safety devices working.

- Keep screens and windows in place.

- Keep children and others away.

- Never carry riders.

- Lower boom, engage park brake, stop engine, and remove key before leaving.

- Keep cab clean, especially pedal area.

This safety sign is located inside the cab near the right joystick.

TX1125787 —19—14NOV12

CAUTION, Before Operating This Machine

JS90457,00001CB -19-10APR19-7/21

6. **WARNING, Pinch Area Keep Away**

Pinch area keep away.

This safety label is located in four places on the loader linkage.

TX1125566 —19—17DEC12

WARNING, Pinch Area Keep Away

JS90457,00001CB -19-10APR19-8/21

7. **CAUTION, Avoid Overturn**

- Carry load low.

- Avoid steep slopes and high speed turns.

- Do not operate over rated capacity.

This safety label is located inside the cab near the left joystick.

TX1125788 —19—13NOV12

CAUTION, Avoid Overturn

Continued on next page

JS90457,00001CB -19-10APR19-9/21

8. **WARNING, Seat Belt Should Be Worn At All Times**

A seat belt should be worn at all times during machine operation to prevent serious injury or death in the event of an accident or machine overturn. Failure to wear a seat belt during machine operation may result in serious injury or death.

This safety label is located inside the cab near the left joystick.

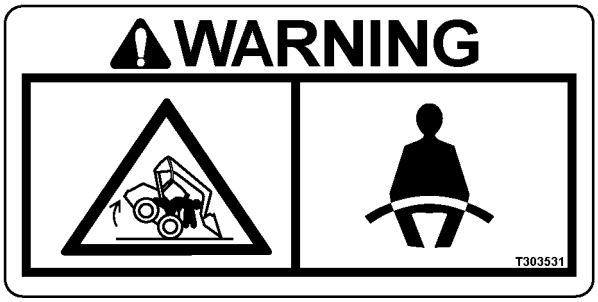

TX1125804 —19—13NOV12

WARNING, Seat Belt Should Be Worn At All Times

JS90457,00001CB -19-10APR19-10/21

9. **DANGER, Avoid Crushing Injury**

Always install boom lock before entering this area.

This safety label is located on the front of the machine near the bucket cylinder.

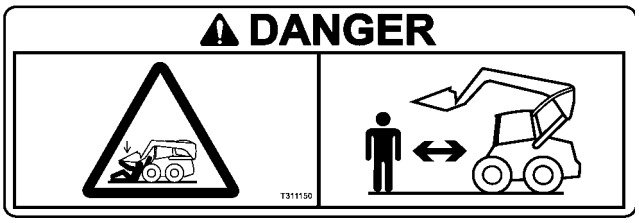

TX1125726 —19—17DEC12

DANGER, Avoid Crushing Injury

JS90457,00001CB -19-10APR19-11/21

10. **WARNING, Prevent Injury**

To prevent injury, lower lift arms fully before engaging or disengaging attachment engagement pins. Ensure the pins are fully engaged before operating loader.

This safety label is located on the front of the machine near the bucket cylinder.

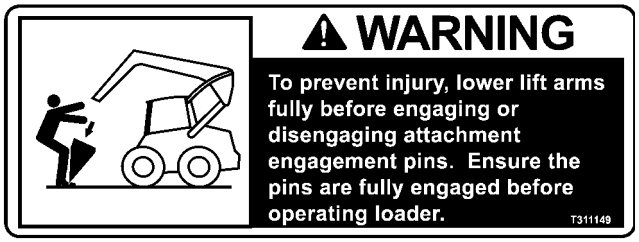

TX1125728 —19—03JAN13

WARNING, Prevent Injury

Continued on next page

JS90457,00001CB -19-10APR19-12/21

11. **WARNING, No Riders/Keep Riders Off Machine**

Only allow the operator on the machine. Keep riders off.

Riders on machine are subject to injury such as being struck by foreign objects and being thrown off the machine. Riders also obstruct the operator's view resulting in the machine being operated in an unsafe manner.

WARNING, No Riders/Keep Riders Off Machine

TX1128864 —UN—04JAN13

JS90457,00001CB -19-10APR19-13/21

12. **WARNING, Avoid Crushing Injury**

Avoid crushing injury.

Boom linkage moves near engine hood and frame.

Never stand or lean anywhere on loader.

This safety label is located at the rear of the machine on the engine hood.

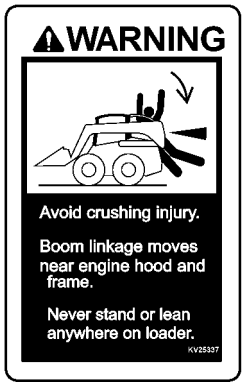

WARNING, Avoid Crushing Injury

TX1125731 —19—17DEC12

JS90457,00001CB -19-10APR19-14/21

13. **WARNING, Avoid Rotating Fan**

Avoid rotating fan.

Stop engine.

Keep clear to avoid serious injury.

This safety label is located on the rear of the machine behind the grill.

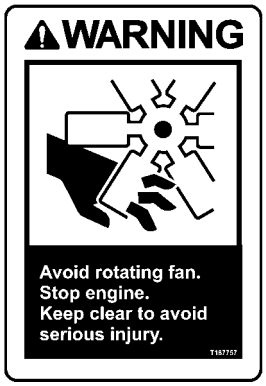

WARNING, Avoid Rotating Fan

TX1125730 —19—17DEC12

Continued on next page

JS90457,00001CB -19-10APR19-15/21

14. **WARNING, Pressurized System**

Pressurized system. Hot coolant can cause serious burns, injury or death. To open the cooling system filler cap, stop the engine and wait until the cooling system components are cool. Loosen the cooling system pressure cap slowly in order to relieve the pressure.

This safety message is positioned on the surge tank cap.

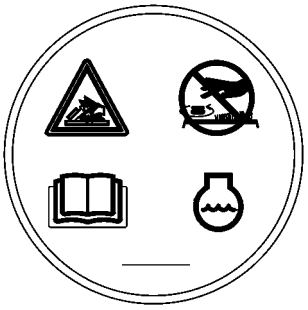

TX1099924 —UN—24OCT11

WARNING, Pressurized System

JS90457,00001CB -19-10APR19-16/21

15. **CAUTION, After Raising ROPS**

Read and understand Operator Manual before raising ROPS.

Install cab lock after ROPS is raised. Failure to do so may cause cab to fall, causing serious injury.

This safety label is located inside the cab behind the right joystick.

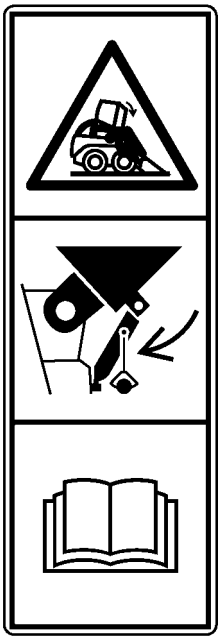

TX1252007 —UN—06FEB18

CAUTION, After Raising ROPS

JS90457,00001CB -19-10APR19-17/21

16. **Alternative Exit**

The rear window provides a large exit path if the cab door is blocked in an emergency situation. The rear window is an alternate exit.

This label is located on inside of the right-rear window.

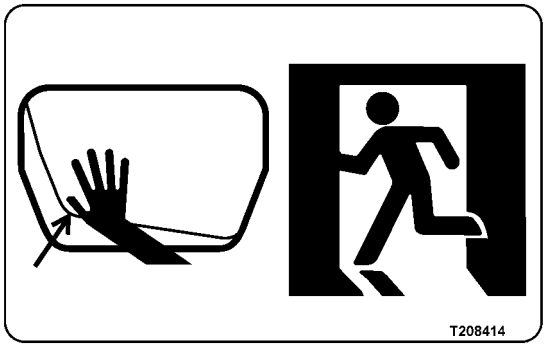

TX1125732 —UN—12NOV12

Alternative Exit

Continued on next page

JS90457,00001CB -19-10APR19-18/21

17. **Tiedown Point**

Route appropriate tiedown device through tiedown points.

This label is positioned strategically around the machine.

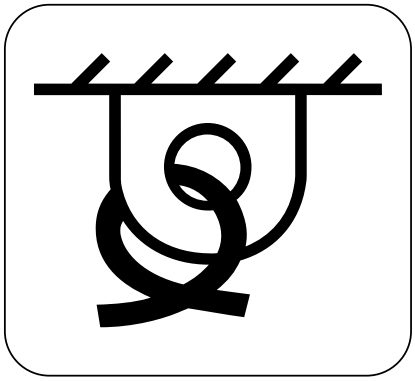

Tiedown Point

TX1171997 —UN—19SEP14

JS90457,00001CB -19-10APR19-19/21

18. **Secondary Alternative Exit**

The door may serve as an alternate exit.

This label is located inside the cab on the wiper motor.

Secondary Alternative Exit

TX1252375 —UN—13FEB18

JS90457,00001CB -19-10APR19-20/21

19. **IMPORTANT, Secondary Alternative Exit Handles**

Door will release from hinges when orange handles are turned. Tools are required for re-assembly.

This label is located inside the cab on the wiper motor.

IMPORTANT, Secondary Alternative Exit Handles

TX1274839 —UN—19MAR19

JS90457,00001CB -19-10APR19-21/21

Machine Control

Loader and steering control methods will vary on machine depending on what is ordered directly from factory. There are five machine configurations available:

- Electrohydraulic (EH) hands only (ISO pattern) controls
- Electrohydraulic (EH) hands only (ISO and H pattern with performance package) controls

For more detailed information, see Operation—Operating the Machine. (Section 2-2.)

EH Controls:

NOTE: The switchable controls option allows machine control to be easily switched between EH hands only (ISO pattern) control or EH hands only (H pattern) controls.

EH Hands Only (ISO pattern) Controls—Joysticks (1 and 2) operate loader boom, bucket, and auxiliary hydraulic functions. Joysticks also steer machine using an ISO pattern. Engine speed is controlled by either engine speed control dial (12) or the engine speed control pedal (15).

EH Hands Only (ISO and H pattern with performance package) Controls—Joysticks operate loader boom, bucket, and auxiliary hydraulic functions. Joysticks also steer machine using an ISO and H pattern with performance package. Engine speed is controlled by either engine speed control dial or the engine speed control pedal.

1— Left Joystick
2— Right Joystick
3— Float Switch/Ride Control (activate)
4— Auxiliary Proportional Switch
5— Horn
6— Two-Speed Switch (if equipped)
7— Auxiliary Flow Set Switch
8— Auxiliary Third Function A Switch
9— Auxiliary Third Function B Switch
10— Auxiliary Second Function A Switch
11— Auxiliary Second Function B Switch
12— Engine Speed Control Dial
15— Engine Speed Control Pedal

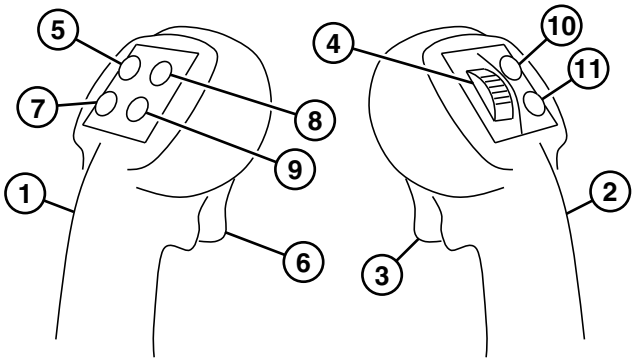

TX1066656 —UN—22OCT09

Left and Right Joysticks

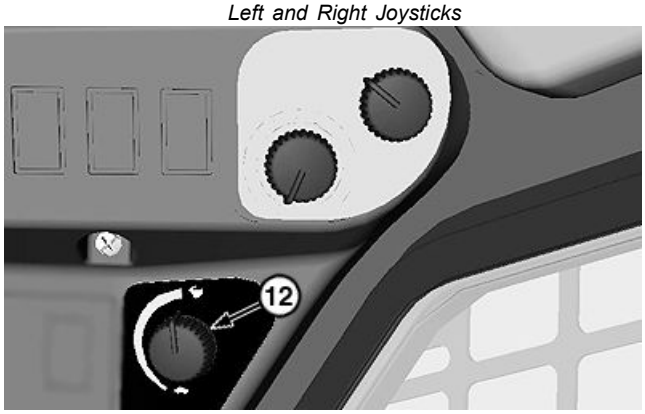

TX1205017 —UN—03NOV15

Engine Speed Control Dial

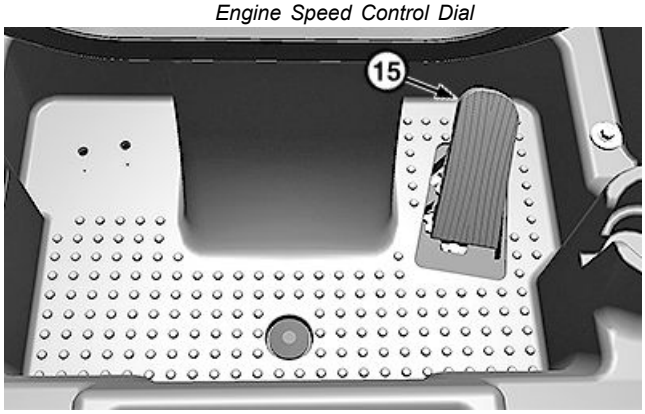

TX1250285A —UN—16JAN18

Engine Speed Control Pedal

JS90457,00001CC -19-13FEB18-1/1

Control Panel—Key Start

TX1124805A —UN—16NOV12

Control Panel—Key Start

1— Quik-Tatch™ Switch (if equipped)
2— Work Lights Switch
3— Auxiliary Fourth Function Switch (if equipped)
4— Reversing Fan Switch (if equipped)
5— Self Leveling Switch (if equipped)
6— High Flow Switch (if equipped)
7— Dual Flasher Switch (if equipped)
8— Air Conditioner Switch (if equipped)
9— Blower Speed Control Dial (if equipped)
10— Cab Temperature Control Dial (if equipped)
11— Engine Speed Control Dial
12— Park Brake Switch
13— Key Switch

1—Quik-Tatch™ Switch (if equipped):

NOTE: The switch will automatically return to the center position when released. The lock pins will stop at the position they are in at the time the switch is released.

Press and hold upper half of switch until lock pins are engaged. Press and hold lower half of switch until lock pins are retracted. For more information, see Attachment Mounting System—Quik-Tatch™. (Section 2-2.)

2—Work Lights Switch: This switch has three positions:

- Push upper half of switch to turn on front work lights, side deluxe lights, red taillights, and rear work light.
- Push to middle position to turn on front work lights and red taillights.
- Push lower half of switch to turn off lights.

3—Auxiliary Fourth Function Switch (if equipped): Provides the electric control of an auxiliary function.

4—Reversing Fan Switch (if equipped): Used to reverse the direction of fan rotation for purging debris from cooling package. This switch has three positions:

- Off—Disables reversing fan function.
- Auto (middle position)—This position is used to prevent machine from overheating caused by accumulated debris against cooling package. Hydraulic oil temperature must be above 12°C (54°F).
  The fan reverse interval can be changed using the engagement and monitor unit (EMU). See Fan Reverse Interval (EMU). (Section 2-3.)
- Manual—Press and hold switch in this position to manually activate reversing fan for 10 seconds. The switch can be used at any engine speed. Hydraulic oil temperature must be above 12°C (54°F). Switch is programmed to wait 60 seconds before allowing fan to reverse cycle again.

5—Self Leveling Switch (if equipped):

NOTE: Self leveling is only operational during boom raise function.

Press upper half of switch to allow the attachment to remain in same relative position as the boom is raised. Push lower half of switch to turn off this feature. For more information, see Self Leveling Hydraulics—If Equipped. (Section 2-2.)

Continued on next page

JS90457,0000227 -19-04APR18-1/2

6—High Flow Switch (if equipped): Used for attachments that require a high hydraulic flow rate to operate. Push upper half of switch momentarily to activate high flow option. Amber hydraulic high flow icon will appear on engagement and monitor unit (EMU). Push upper half of switch again to turn high flow option off. For more information, see Operating Auxiliary Hydraulics. (Section 2-2.)

7—Dual Flasher Switch (if equipped): Push upper half of switch to turn on warning lights. Push lower half of switch to turn off warning lights.

8—Air Conditioner Switch (if equipped): Push upper half of switch to turn on air conditioner. Push lower half of switch to turn off air conditioner.

9—Blower Speed Control Dial (if equipped): Turn dial clockwise to increase blower speed. Blower has four speed settings and an OFF position.

10—Cab Temperature Control Dial (if equipped): Turn dial clockwise towards red zone for warmer air. Turn dial counterclockwise towards blue zone for cooler air

11—Engine Speed Control Dial: The engine control unit (ECU) defaults engine speed to slow idle on engine start-up regardless of engine speed control dial position. Move engine speed control dial to slow idle position and then increase the setting to the desired speed to get the engine speed to increase. Turn dial clockwise towards the rabbit to increase engine speed. Turn dial counterclockwise towards the turtle to decrease engine speed.

12—Park Brake Switch: This switch has three positions:

- Push upper half of switch to engage park brake. This position also hydraulically locks the boom and bucket.
- Push to middle position to hydraulically enable boom and bucket while park brake is engaged.

NOTE: Operator must be in seat with seat belt fastened, interlocking seat bar lowered, and engine running to disengage park brake.

- Push lower half of switch to momentary position and release to middle position to disengage park brake.

13—Key Switch: This switch has three positions:

- Position where ignition key can be inserted or removed is the OFF position. No circuits are active in this position.
- Turn key **clockwise** from the OFF position. This is the RUN position for the engine.
- Turn key **clockwise** from the RUN position. This is the START position for the engine. After starting engine, release key. Key returns to RUN position.

Quik-Tatch is a trademark of Deere & Company

JS90457,0000227 -19-04APR18-2/2

Control Panel—Keyless Start

Control Panel

1— Quik-Tatch™ Switch (if equipped)
2— Work Lights Switch
3— Auxiliary Fourth Function Switch (if equipped)
4— Reversing Fan Switch (if equipped)
5— Not Used
6— High Flow Switch (if equipped)
7— Dual Flasher Switch (if equipped)
8— Air Conditioner Switch (if equipped)
9— Blower Speed Control Dial (if equipped)
10— Cab Temperature Control Dial (if equipped)
11— Engine Speed Control Dial
12— Sealed Switch Module (SSM)

1—Quik-Tatch™ Switch (if equipped):

NOTE: The switch automatically returns to center position when released. The lock pins stop at the position they are in at the time the switch is released.

Press and hold upper half of switch until lock pins are engaged. Press and hold lower half of switch until lock pins are retracted. For more information, see Attachment Mounting System—Quik-Tatch™. (Section 2-2.)

2—Work Lights Switch: This switch has three positions:

- Push upper half of switch to turn on front work lights, side deluxe lights, red taillights, and rear work light.
- Push to middle position to turn on front work lights and red taillights.
- Push lower half of switch to turn off lights.

3—Auxiliary Fourth Function Switch (if equipped): Provides the electric control of an auxiliary function.

4—Reversing Fan Switch (if equipped): Used to reverse the direction of fan rotation for purging debris from cooling package. This switch has three positions:

- Off—Disables reversing fan function.
- Auto (middle position)—This position is used to prevent machine from overheating caused by accumulated debris against cooling package. Hydraulic oil temperature must be above 12°C (54°F).
  The fan reverse interval can be changed using the engagement and monitor unit (EMU). See Fan Reverse Interval (EMU). (Section 2-3.)
- Manual—Press and hold switch in this position to manually activate reversing fan for 10 seconds. The switch can be used at any engine speed. Hydraulic oil temperature must be above 12°C (54°F). Switch is programmed to wait 60 seconds before allowing fan to reverse cycle again.

5—Not Used

6—High Flow Switch (if equipped): Used for attachments that require a high hydraulic flow rate to operate. Push upper half of switch momentarily to activate high flow option. Amber hydraulic high flow icon appears on engagement and monitor unit (EMU). Push upper half of switch again to turn off high flow option. For more information, see Operating Auxiliary Hydraulics. (Section 2-2.)

Continued on next page

JS90457,0000228 -19-14NOV18-1/2

7—Dual Flasher Switch (if equipped): Push upper half of switch to turn warning lights on. Push lower half of switch to turn off warning lights.

8—Air Conditioner Switch (if equipped): Push upper half of switch to turn on air conditioner. Push lower half of switch to turn off air conditioner.

9—Blower Speed Control Dial (if equipped): Turn dial clockwise to increase blower speed. Blower has four speed settings and an OFF position.

10—Cab Temperature Control Dial (if equipped): Turn dial clockwise towards red zone for warmer air. Turn dial counterclockwise towards blue zone for cooler air.

11—Engine Speed Control Dial:

NOTE: The engine control unit (ECU) defaults engine speed to slow idle on engine start-up regardless of engine speed control dial position. Move engine speed control dial to slow idle position and then increase the setting to the desired speed to get the engine speed to increase.

Turn dial clockwise towards the rabbit to increase engine speed. Turn dial counterclockwise towards the turtle to decrease engine speed.

12—Sealed Switch Module (SSM): See Sealed Switch Module (SSM) in this section.

Quik-Tatch is a trademark of Deere & Company

JS90457,0000228 -19-14NOV18-2/2

Sealed Switch Module (SSM)

1—Engine Start Switch: This switch has three settings:

- Press and release switch (left light-emitting diode [LED] is illuminated) to energize ignition and apply power to control units and engagement and monitor unit (EMU).

  NOTE: If kept in this state for more than 10 minutes, machine shuts down automatically.

- After EMU has initialized, press and hold switch to start engine. Both LEDs are illuminated while engine is starting. Only left LED is illuminated when engine is running.
- When engine stop switch is pressed, engine stops and both LEDs are off.

2—Engine Stop Switch: Press switch to shut off engine.

3—Hydraulic Enable Switch:

NOTE: Park brake is engaged when hydraulic functions are disabled.

Press switch (LED is off) to enable boom and bucket hydraulic functions. Press switch again (LED is illuminated) to disable boom and bucket hydraulic functions.

4—Park Brake Switch:

NOTE: Hydraulic functions are enabled when park brake is released.

Press switch to release park brake (LED and indicator on display unit go off). Press switch again (LED and indicator on display unit are illuminated) to engage park brake.

5—Not Used

6—Not Used

7—Transmission Response Switch (EH machines only; if equipped with joystick performance package):

This switch controls movement rate of travel and steer functions. This switch has three positions:

- Press switch (left LED illuminated) to enable precision rate.
- Press switch again (left and middle LED illuminated) to enable utility rate.
- Press switch again (all LEDs illuminated) to enable production rate.

For more information, see Transmission Response Rate (Travel and Steer)—If Equipped (2-2).

8—Accelerator/Decelerator Mode Switch: This switch allows the engine speed control pedal to increase or decrease engine speed. This switch has two settings:

- Press switch (left LED illuminated) to enable acceleration mode.
- Press switch (right LED illuminated) to enable deceleration mode.

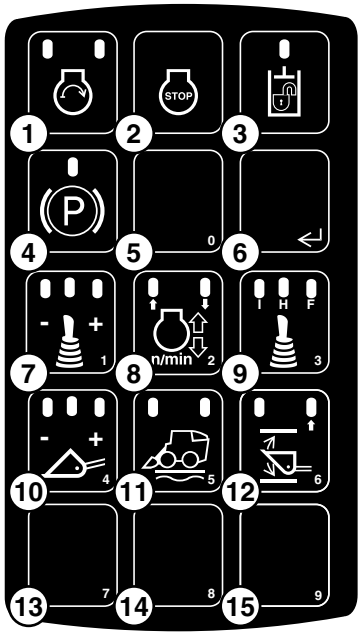

TX1236839 —UN—08MAR18

Sealed Switch Module (SSM)

1— Engine Start Switch
2— Engine Stop Switch
3— Hydraulic Enable Switch
4— Park Brake Switch
5— Not Used
6— Not Used
7— Transmission Response Switch (EH machines only; if equipped with joystick performance package)
8— Accelerator/Decelerator Mode Switch
9— Pattern Select Switch (EH machines only; if equipped with joystick performance package)
10— Hydraulic Response Switch (EH machines only; if equipped with joystick performance package)
11— Ride Control Switch (if equipped)
12— Self Leveling Switch (if equipped)
13— Not Used
14— Not Used
15— Not Used

9—Pattern Select Switch (EH machines only; if equipped with joystick performance package):

This switch allows for a quick change of joystick functions between electrohydraulic (EH) hands only (ISO pattern) controls, EH hands only (H pattern) controls, EH hand and foot controls, or EH hand and foot (ISO pattern) controls:

- Press and release switch until left LED is illuminated to enable EH hands only (ISO pattern) controls.
- Press and release switch until middle LED is illuminated to enable EH hands only (H pattern) controls.
- Press and release switch until right LED is illuminated to enable EH hand and foot controls.
- If activated in the engagement and monitor unit (EMU), press and release switch until right and left LEDs are illuminated to enable EH hand and foot (ISO pattern) controls.

For more information, see Switchable Controls—If Equipped (2-2).

Continued on next page

RE59955,0001106 -19-28NOV24-1/2

10—Hydraulic Response Switch (EH machines only; if equipped with joystick performance package):

This switch controls movement rate of boom and bucket functions. This switch has three positions:

- Press switch (left LED illuminated) to enable precision rate.
- Press switch again (left and middle LED illuminated) to enable utility rate.
- Press switch again (all LEDs illuminated) to enable production rate.

For more information, see Hydraulic Response Rate (Boom and Bucket)—If Equipped (2-2).

11—Ride Control Switch (if equipped): If machine is equipped with ride control, the switch activates the ride control system. The switch has two settings:

- Press switch (right LED is illuminated) to activate ride control.
- Press switch again to deactivate ride control (LED is off).

For more information, see Ride Control—If Equipped (2-2).

12—Self Leveling Switch (if equipped): For machines equipped with self leveling up (SLU), the switch activates the self leveling system. The switch has two settings:

- Press switch (both LEDs are illuminated) to activate SLU.
- Press switch again (all LEDs are off) to turn off SLU.

For more information, see Self Leveling Hydraulics—If Equipped (2-2).

13—Not Used

14—Not Used

15—Not Used

RE59955,0001106 -19-28NOV24-2/2

Gauges and Indicators

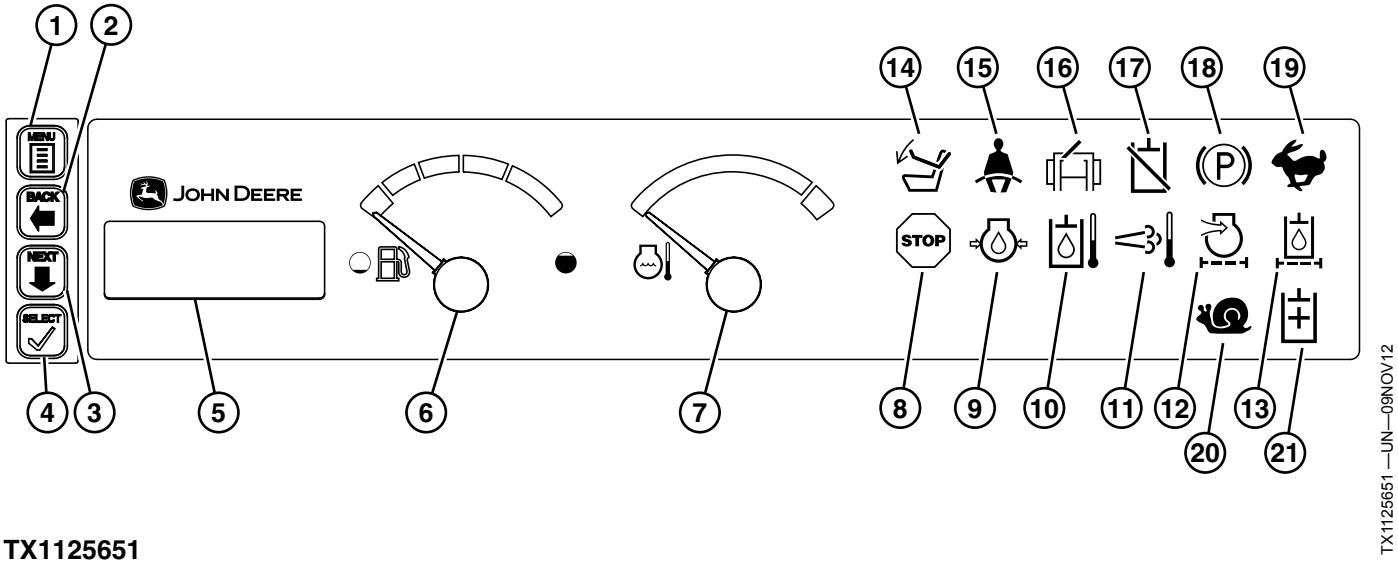

TX1125651

Gauges and Indicators

1— MENU Button
2— BACK Button
3— NEXT Button
4— SELECT Button
5— Engagement and Monitor Unit (EMU) Display
6— Fuel Gauge
7— Engine Coolant Temperature Gauge
8— STOP Indicator
9— Engine Low Oil Pressure Indicator
10— Hydraulic Oil Temperature Indicator
11— Exhaust Filter Cleaning Indicator (FT4 engines only)
12— Engine Air Filter Restriction Indicator
13— Hydraulic Oil Filter Restriction Indicator
14— Interlocking Seat Bar Switch Indicator
15— Seat Belt Switch Indicator
16— Cab Door Switch Indicator
17— Hydraulics OFF Indicator
18— Park Brake Indicator
19— Two-Speed Indicator
20— Creep Mode Indicator (EH machines only)
21— Hydraulic High Flow Indicator

1—MENU Button: Press button to scroll through menu options on the engagement and monitor unit (EMU).

2—BACK Button: Press button to return to previous menu options.

3—NEXT Button: Press button to move forward through menu options.

4—SELECT Button: Press button to select a menu or an item under a menu.

5—Engagement and Monitor Unit (EMU) Display: Displays diesel exhaust fluid (DEF) level, vital operating information, hours, diagnostic trouble codes (DTCs), diagnostics, and used to configure units of measure.

6—Fuel Gauge: Indicates amount of fuel in fuel tank.

7—Engine Coolant Temperature Gauge: Indicates engine coolant temperature.

8—STOP Indicator: Red indicator will light when machine should be shutdown.

9—Engine Low Oil Pressure Indicator: Red indicator will light when engine oil pressure is too low.

10—Hydraulic Oil Temperature Indicator: Red indicator will light when hydraulic oil temperature is too high.

IMPORTANT: Avoid machine damage. Do not stop engine when exhaust filter cleaning indicator illuminates.

11—Exhaust Filter Cleaning Indicator: White indicator will illuminate when elevated idle is active or exhaust filter cleaning is in process.

Machine can be operated as normal if auto cleaning is being performed. Indicator will turn off when exhaust filter auto cleaning is complete and exhaust temperatures return to normal.

Indicator also illuminates during parked cleaning. For more information, see Exhaust Filter. (Section 2-2.)

12—Engine Air Filter Restriction Indicator: Amber indicator will light when air filter elements are restricted.

13—Hydraulic Oil Filter Restriction Indicator: Amber indicator will light when hydraulic filter element is restricted.

14—Interlocking Seat Bar Switch Indicator: Red indicator will light when interlocking seat bar is in the raised position.

15—Seat Belt Switch Indicator: Red indicator will light when interlocking seat bar is in the raised position and for 5 seconds after the interlocking seat bar is lowered to remind operator that seat belt is not fastened.

Continued on next page

JB92884,000014F -19-19SEP17-1/2

16—Cab Door Switch Indicator: Red indicator will light when cab door is open.

17—Hydraulics OFF Indicator: Red indicator will light when hydraulics are disabled.

18—Park Brake Indicator: Red indicator will light when park brake is engaged.

19—Two-Speed Indicator: Amber indicator will light when two-speed shift is in high range.

20—Creep Mode Indicator (EH machines only): Amber indicator will light when machine is in creep mode.

21—Hydraulic High Flow Indicator: Amber indicator will light when hydraulic high flow is activated.

JB92884,000014F -19-19SEP17-2/2

Interlocking Seat Bar

Interlocking seat bar (1) must be lowered after sitting in the operator's seat in order for hydraulic and travel functions to operate.

Adjusting the Interlocking Seat Bar

1. Loosen lock nut (2) on right side of the interlocking seat bar.
2. Turn adjustable stop (3) clockwise to adjust seat bar lower. Turn adjustable stop counterclockwise to adjust seat bar higher.
3. Tighten lock nut when finished with adjustment.
4. Repeat procedure on left side of the interlocking seat bar to match.

1— Interlocking Seat Bar
2— Lock Nut
3— Adjustable Stop

TX1205147 —UN—04NOV15

Interlocking Seat Bar

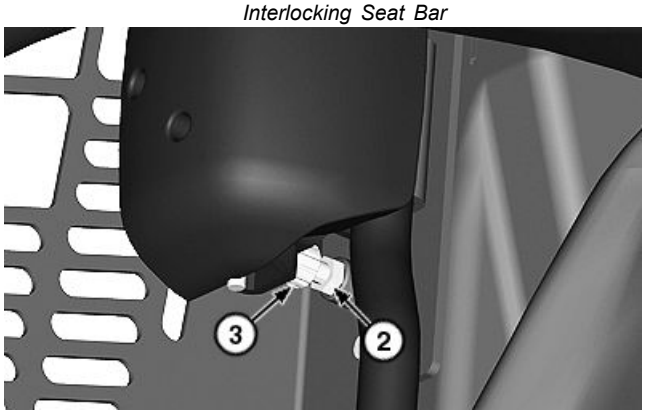

TX1119802 —UN—07AUG12

Locking Seat Bar Adjustment

JB92884,0000150 -19-09JUN16-1/1

Handle Cab Door Safely—If Equipped

IMPORTANT: Handle door safely. Be aware that door is breakable. Use caution when removing door.

If cab needs to be raised for service, keep the door closed. Be aware of surroundings so that door does not come in contact with any objects.

Use care if cab door needs to be removed. To prevent damage to the door, handle with care and store in a secure location.

1— Cab Door

TX1248658A —UN—14DEC17

Cab Door

JS90457,0000211 -19-01FEB18-1/1

Cab Door—If Equipped

If machine is equipped with a cab door, the cab door must be closed in order to enable boom and bucket functions.

Entering and Exiting the Cab

When entering the cab, pull handle (1) outward and open the door. Use handholds for assistance.

When exiting the cab, ensure engine is off and park brake is engaged. Raise interlocking seat bar. Hold on to bar (2) and push button (3) up with thumb or palm of hand. Swing door open and exit the cab safely using handholds.

1— Handle
2— Bar
3— Button

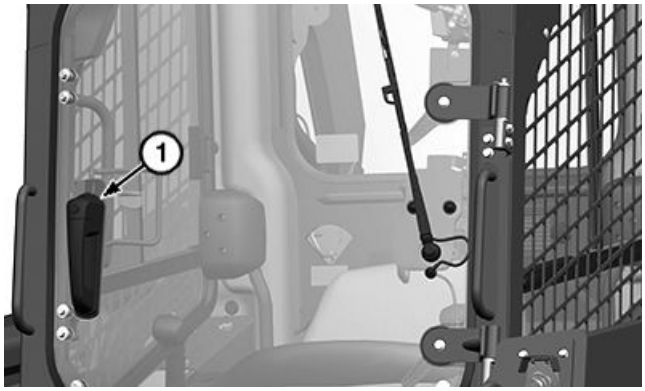

TX1248660A —UN—14DEC17

Cab Door (view from outside cab)

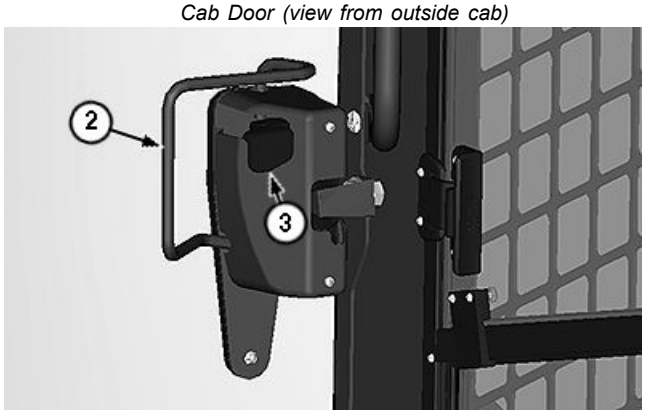

TX1166657A —UN—23JUL14

Cab Door (view from inside cab)

Continued on next page

JS90457,0000212 -19-24JAN18-1/4

Removing and Installing Door

IMPORTANT: Handle door safely. Be aware that door is breakable. Use caution when removing door.

To remove door:

1. Park machine on a level surface.
2. Raise boom and lock in raised position. See Boom Lock. (Section 2-2.)
3. Engage park brake and turn engine OFF.
4. Remove the wire retainer (4) on gas shock rod (5) by rotating the wire retainer off the shaft and pulling outward. Remove gas shock rod from ball joint. Install wire retainer into shaft for storage.
5. Disconnect wiper motor harness connector (6).
6. Disconnect washer fluid line (7). Make sure to leave the check valve (8) connected to the fluid line inside the cab.
7. On outside of machine, remove cotter pin (9) and washer from top hinge pin. Store appropriately.

CAUTION: Prevent possible crushing injury from heavy component. Use appropriate lifting device.

8. Using appropriate lifting device, carefully lift the door until the stop clears the door frame.

Specification	
Door—Weight	23 kg 50 lb

9. Rotate door until the hinge and handhold do not contact.
10. Carefully lift door the rest of the way off and store in a protected area.

To install door:

1. Park machine on a level surface.
2. Raise boom and lock in raised position. See Boom Lock. (Section 2-2.)
3. Engage park brake and turn engine OFF.
4. Carefully lift door. Start with the door in the 180° open position from the front of the machine. Line up hinges with hinge pins and partially install. Slowly rotate door 90°, making sure to stay clear of handhold. Fully slide hinges down onto hinge pins.
5. Install cotter pin and washer.

IMPORTANT: Wiper assembly must be connected so machine knows that a door is present. If the wiper assembly is not connected when a door is present, machine will allow the boom to function with the door in the open position, which may result in damage to the door.

6. Connect washer fluid line and wiper motor harness connector.
7. Remove wire retainer from gas shock rod.
8. Install gas shock rod on ball joint. Install wire retainer.
9. Verify door seals and closes properly. If adjustment is needed, see Door Adjustment in this section.

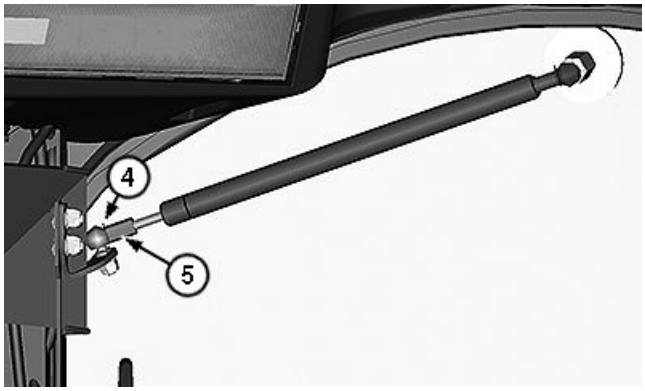

TX1166664A —UN—23JUL14

Gas Shock Rod (view from inside cab)

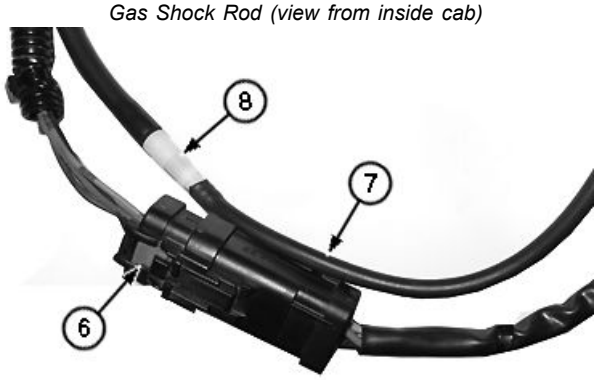

TX1067684A —UN—12NOV09

Wiper Motor Harness Connector

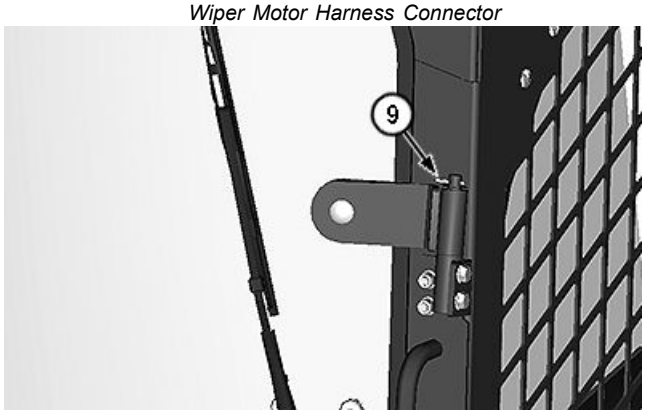

TX1166670A —UN—23JUL14

Cab Door (view from outside cab)

4— Wire Retainer
5— Gas Shock Rod
6— Wiper Motor Harness Connector
7— Washer Fluid Line
8— Check Valve
9— Cotter Pin

Continued on next page

JS90457,0000212 -19-24JAN18-2/4

Door Adjustment

If door needs to be adjusted to seal properly, proceed with the following steps:

1. Position striker bolt (10) toward the front bottom of the mounting hole. Lightly tighten the nut. More adjustment may be required later.
2. Loosen the three hinge fasteners (11). Open and close the door several times.

NOTE: Hinge fasteners are slotted so door can move slightly to get the proper fit.

3. Slide upper part of hinge (12) to the left or right so there is approximately a 3 mm (1/8 in) gap between striker bolt and upper jaw of latch (13).
4. Tighten the three hinge fasteners.
5. Latch door and verify that there is approximately 1 mm (1/32—1/16 in) of compression on door seal near the upper latch side corner of the door. If there is too much compression and door latches with difficulty (door will be harder to close when the side windows are closed), adjust the striker forward. If there is not enough compression, adjust the striker rearward. Try to keep the striker at a constant height to avoid needing to adjust the hinge to maintain striker bolt and latch jaw clearance.
6. After a positive seal is achieved and the effort to close the door is acceptable, verify that the striker bolt and latch jaw clearance is still good. If not, adjust the hinge or striker bolt to correct the position of the striker bolt in the latch jaw.
7. Once all adjustments are complete, fully tighten the striker bolt and the three hinge fasteners.

10— Striker Bolt
11— Hinge Fastener (3 used)
12— Upper Part of Hinge
13— Upper Jaw of Latch

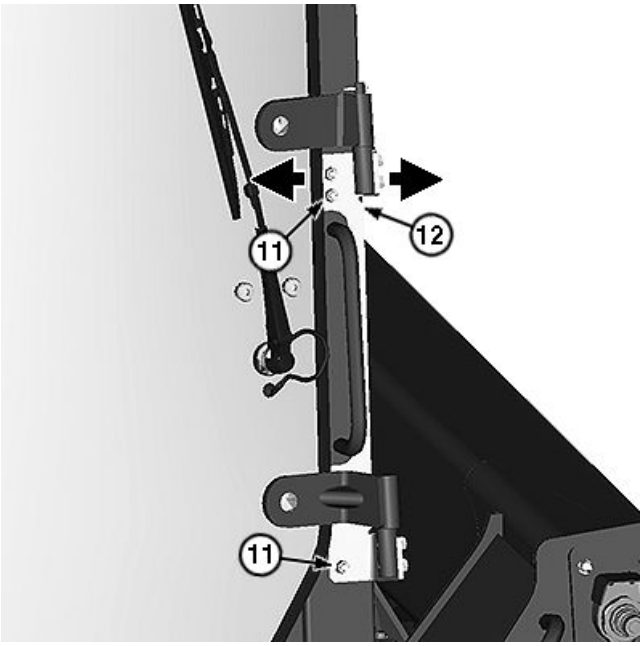

TX1166677A —UN—23JUL14

Cab Door Hinge

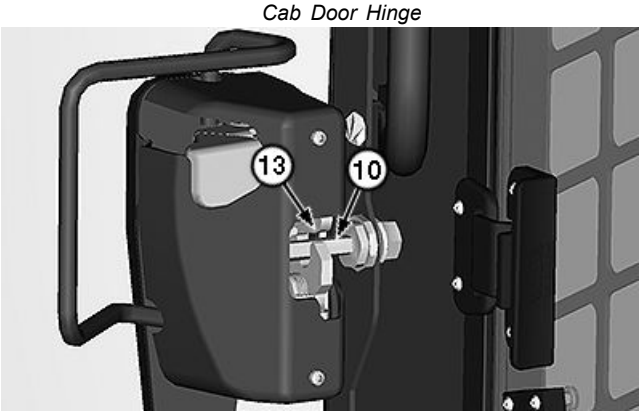

TX1166680A —UN—23JUL14

Cab Door Latch

JS90457,0000212 -19-24JAN18-3/4

8. From inside the cab with door closed and latched, adjust the door sensor bracket (14) so there is approximately 2 mm (1/16 in) of space between the bracket and sensor (15). Less space is allowable, but the bracket should not touch the sensor. Fully tighten the bracket nuts when adjustment is complete.

14— Door Sensor Bracket
15— Sensor

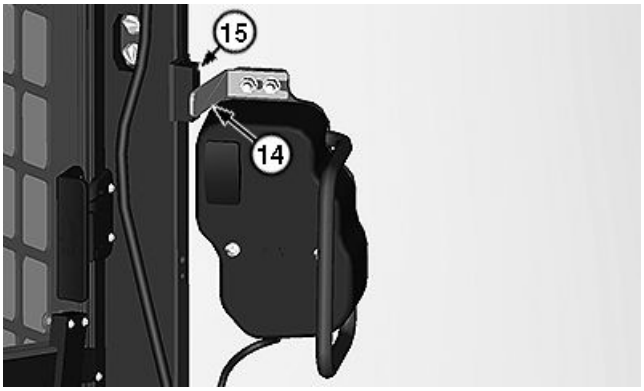

TX1166688A —UN—23JUL14

Cab Door Sensor Bracket and Sensor

JS90457,0000212 -19-24JAN18-4/4

Side Windows—If Equipped

To open front window section (4), rotate glass retainer lever (1) to the rearward position. Squeeze latch (2) and slide window rearward. Rotate glass retainer lever to the downward position to hold front window section in open position.

To close front window section, rotate glass retainer lever to the rearward position and slide window forward until latch locks into place.

To open back window section (5), squeeze latch (3) and slide window forward.

To close back window section, slide window rearward until latch locks into place.

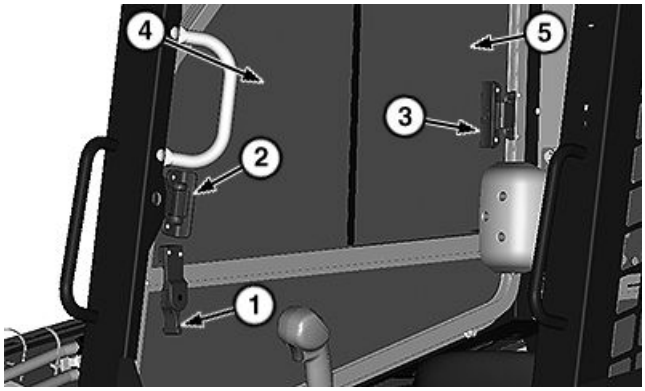

TX1217771 —UN—17JUN16

Side Windows

1— Glass Retainer Lever
2— Front Window Latch
3— Back Window Latch
4— Front Window Section
5— Back Window Section

Removing and Installing Side Windows

To remove side windows:

1. Rotate glass retainer lever to the forward position.
2. Slide front window section rearward to center of frame. Lift and pull out bottom edge towards operator. Remove front window section.
3. Slide back window section forward to center of frame. Lift and pull out bottom edge towards operator. Remove back window section.
4. Store both sections in a protected area.

To install side windows:

NOTE: To install side windows, glass retainer lever must be in the forward position.

1. Install back window section first, lining up groove on bottom of window with the outer track in frame. Slide rearward into stationary position.
2. Install front window section, lining up groove on bottom of window with the inner track in frame. Slide forward into stationary position.
3. Rotate the glass retainer lever to the rearward position.

JB92884,0000127 -19-17AUG18-1/1

Top Window

Top window (1) is standard on canopy or cab.

Top window is bolted in place and can be removed for cleaning. To remove top window:

- Remove cap screws (2) from inside the cab.
- Lift off window from outside the cab.
- Store window and hardware in a protected area.

1— Top Window
2— Cap Screw (4 used)

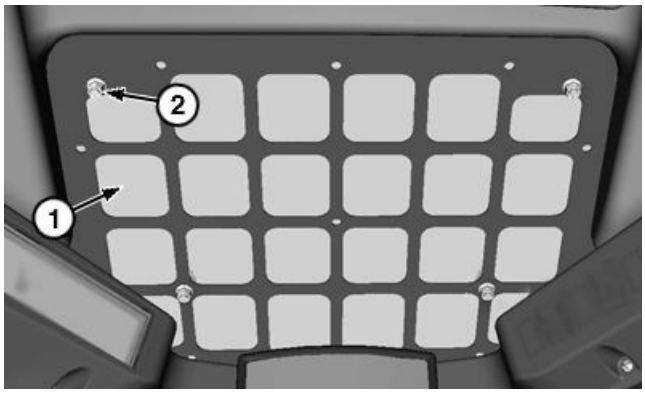

TX1205230 —UN—05NOV15

Top Window

DB84312,000024F -19-13FEB18-1/1

Rear Window (Alternative Exit)

Pull on plastic placard (1) attached to cord and completely remove cord from perimeter seal of window.

Push on bottom corner (2) of window near the instruction label to force window out from molding.

1— Plastic Placard **2— Bottom Corner**

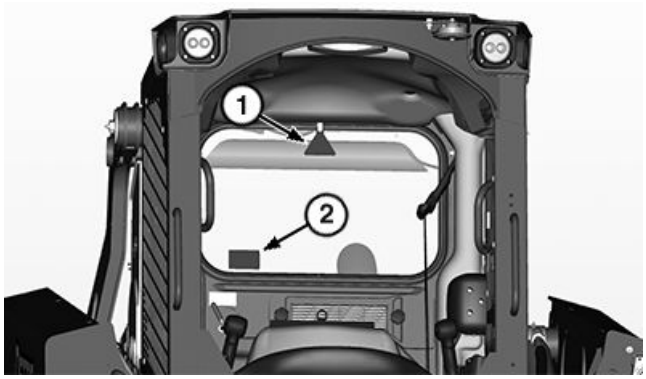

TX1217562 —UN—14JUN16

Alternative Exit

JB92884,0000113 -19-14JUN16-1/1

Secondary Alternative Exit

Open Secondary Alternative Exit

IMPORTANT: Prevent possible machine damage. Door will release from hinges when the orange ¼ turn style handles are turned. Tools are required to reassemble handles. Do not turn handles unless alternative exit of machine is necessary.

The door may serve as an alternate exit.

1. Turn upper handle (1) counterclockwise 1/4 turn until released.
2. Turn lower handle (2) counterclockwise 1/4 turn until released.
3. Disconnect gas shock by pulling collar (3) downward from center mount. Once collar is pulled downward, pull gas shock towards the operator's seat to release.
4. Carefully push out on door and remove door from hinges.

1— Upper Handle
2— Lower Handle
3— Collar

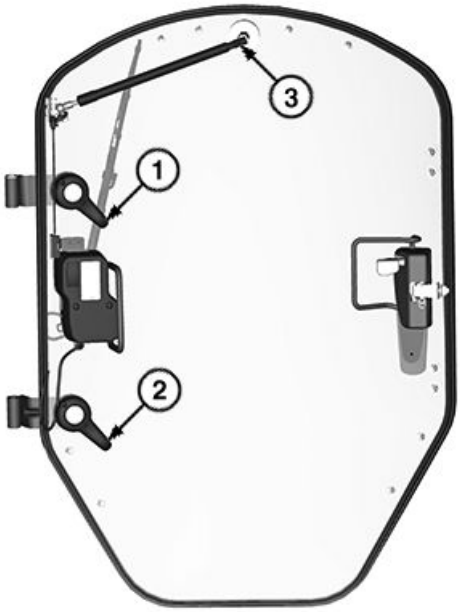

TX1252376A —UN—13FEB18

Secondary Alternative Exit

Continued on next page

DH10862,00001E8 -19-15MAR19-1/2

Assemble Secondary Alternative Exit Handle

1. Inspect upper handle (1) and lower handle (2) for damage. If handle is damaged, see an authorized John Deere dealer.
2. Remove spacers (5) and bushing (6).
3. Remove cap screw (8) from hinge (7) and latch stud (4).
4. Clean and apply Triton® 460 Grease to pins inside handle.
5. Insert latch stud into the handle, aligning the raised part of the latch stud with the groove inside the handle. Turn the latch stud and metal collar clockwise to engage pins into latch stud. Ensure that the latch stud is secure.

IMPORTANT: Avoid possible machine damage. Align spacers and bushing properly before tightening cap screw.

NOTE: The spacers must be installed with the protruding collar facing towards the glass.

6. Install spacers and bushing onto door.
7. Install handle and latch stud through the door, spacers, and square opening in the hinge.
8. Apply Loctite® 242® Threadlocker (medium strength) to the threads of the cap screw.

IMPORTANT: Avoid possible machine damage. Over tightening the cap screw could cause the handle not to function properly. Always tighten cap screws to the proper specification.

9. Install cap screw into latch stud. Tighten to specification.

Specification	
Cap Screw—Torque	6 N·m 53 lb·in

10. Inspect door and hardware to ensure proper fit and function. See Door Adjustment. (Section 2-1.)

Triton is a trademark of Phillips 66 Company Corporation
Loctite and its related brand marks are trademarks of Henkel Corporation

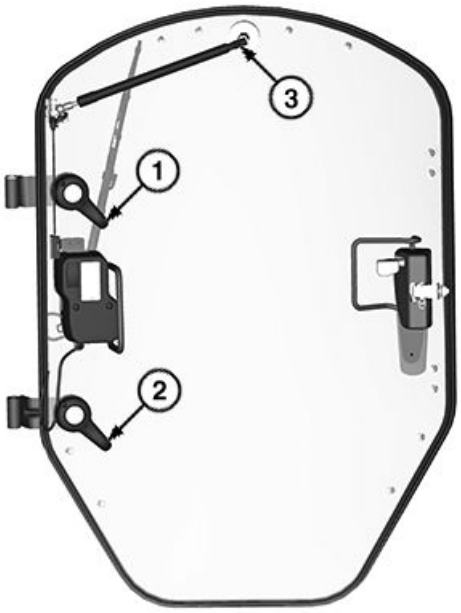

TX1252376A —UN—13FEB18

Secondary Alternative Exit

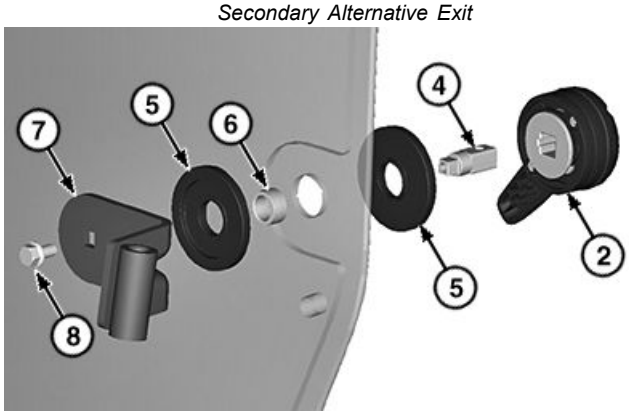

TX1262533A —UN—13SEP18

Lower Handle Assembly

1— Upper Handle
2— Lower Handle
3— Collar
4— Latch Stud
5— Spacer (2 used)
6— Bushing
7— Hinge
8— Cap Screw

DH10862,00001E8 -19-15MAR19-2/2

Fire Extinguisher Location

Mounting Location:

The designated fire extinguisher mounting location (1) is in the headliner.

Use:

NOTE: All fire extinguishers do not operate the same. Operating instructions on canister should be read before use.

The portable fire extinguisher is used to aid in the extinguishing of small fires. Refer to individual manufacturer's instructions and proper fire fighting procedures before the need to use the fire extinguisher arises. See Prevent Fires. (Section 1-2.)

Maintenance:

IMPORTANT: Avoid possible machine damage. Check gauge (if equipped) on fire extinguisher. If fire extinguisher is not fully charged, charge or replace fire extinguisher according to the manufacturer's instructions.

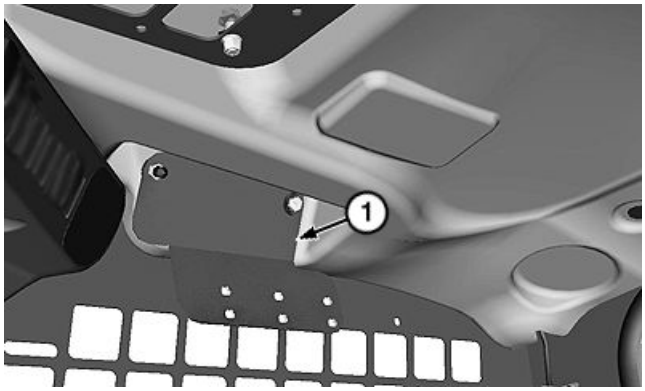

TX1205246 —UN—05NOV15

Fire Extinguisher Mounting Location

1— Fire Extinguisher Mounting Location

Inspect and maintain the fire extinguisher following the manufacturer's recommendations and all local, regional, and national regulations.

JB92884,000014C -19-24AUG22-1/1

12-Volt Power Outlet

NOTE: Machine switched power must be on for operation.

A 12-volt power outlet (1) is located in the upper left corner of the cab. Keep outlet free of dirt and moisture for uninterrupted operation.

1— 12-Volt Power Outlet

2— Service ADVISOR™ Connector

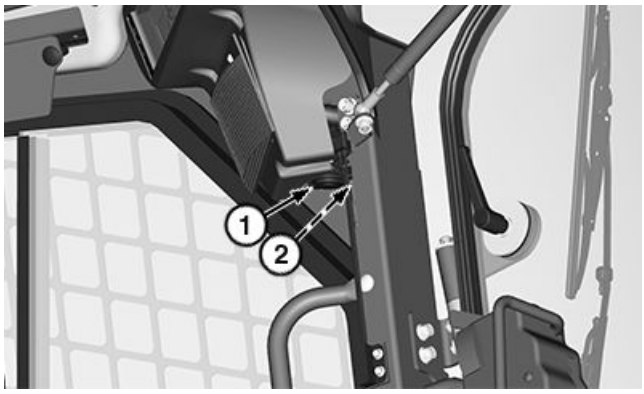

TX1215781 —UN—16MAY16

Power Outlet

Service ADVISOR is a trademark of Deere & Company

JB92884,0000124 -19-17MAY16-1/1

Windshield Wiper and Washer

Push windshield wiper switch (1) to middle position to turn windshield wiper on.

Push and hold upper half of windshield wiper switch to operate windshield washer.

Fill the washer fluid reservoir through windshield washer fluid fill port (2), located inside the cab behind the operator's seat.

1— Windshield Wiper Switch **2— Windshield Washer Fluid Fill Port**

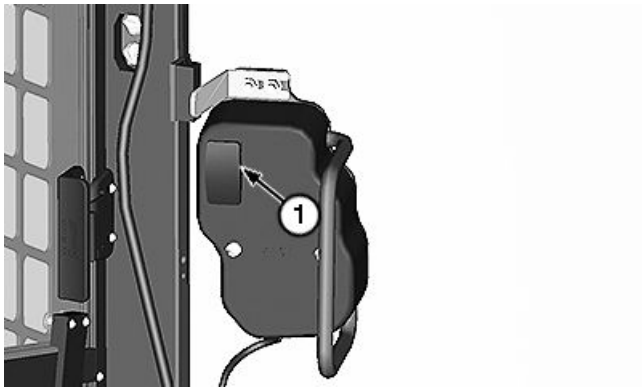

TX1168915A —UN—12AUG14

Windshield Wiper and Washer Switch

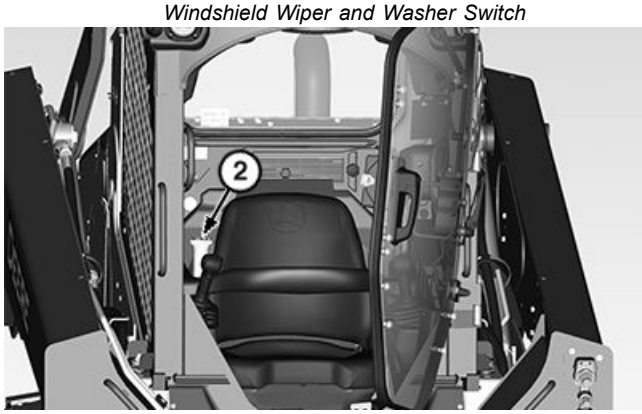

TX1215365 —UN—09MAY16

Windshield Washer Fluid Fill Port

JB92884,0000114 -19-13NOV18-1/1

Heating/Defrosting Controls—If Equipped

NOTE: To maximize defrosting performance, turn on air conditioner (if equipped).

Turn blower speed control dial (1) clockwise to turn heater and defroster on and to increase blower speed. Blower has four speed settings plus an OFF position.

Turn cab temperature control dial (2) clockwise towards red zone for warmer air.

1— Blower Speed Control Dial **2— Cab Temperature Control Dial**

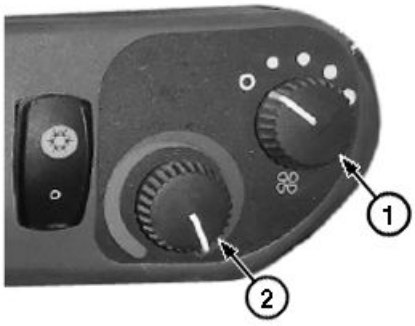

TX1126147A —UN—16NOV12

Heating and Defrosting Controls

JS90457,000022E -19-14FEB18-1/1

Air Conditioner Controls—If Equipped

TX1126149A —UN—16NOV12

Air Conditioner Controls (S.N. —366356)

JK47244,00001BE -19-30SEP22-1/2

Push upper half of air conditioner switch (3) to turn on air conditioner.

Turn cab temperature control dial (2) counterclockwise towards blue zone for cooler air.

Turn blower speed control dial (1) clockwise to increase blower speed. Blower on early production machines has four speed settings plus an OFF position. Blower on late production machines has three speed settings plus an OFF position..

1— Blower Speed Control Dial
2— Cab Temperature Control Dial
3— Air Conditioner Switch

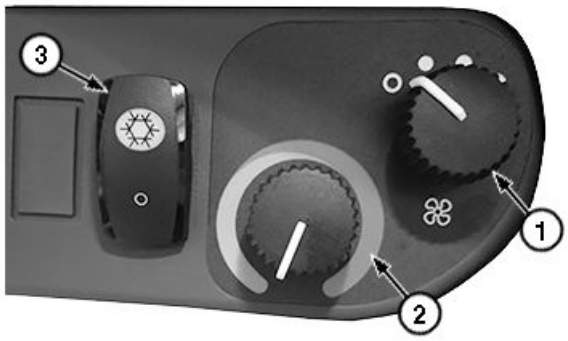

TX1285100A —UN—11SEP19

Air Conditioner Controls (S.N. 366357—)

JK47244,00001BE -19-30SEP22-2/2

Operator Seat

Mechanical Suspension Seat—If Equipped

1. Rotate fore-and-aft adjustment lever (1).
2. Slide seat forward or backward to desired position.
3. Release fore-and-aft adjustment lever to lock in place.
4. Fold out weight adjustment knob (2) to adjust seat to weight of operator.
5. Turn weight adjustment knob clockwise for a heavier operator. Turn weight adjustment knob counterclockwise for a lighter operator.
6. Return weight adjustment knob to original position.

1— Fore-and-Aft Adjustment Lever
2— Weight Adjustment Knob

TX1205303 —UN—06NOV15

Vinyl Mechanical Suspension Seat

Continued on next page

JB92884,0000126 -19-17MAY16-1/3

Air Suspension Seat—If Equipped

1. Pull up on fore-and-aft adjustment lever (1).
2. Slide seat forward or backward to desired position.
3. Release fore-and-aft adjustment lever to lock in place.

NOTE: Switch power must be on for raising operator seat. Engine does not have to be started.

4. Pull up or push down on weight adjustment knob (2) to adjust seat to weight of operator.
5. Pull up on backrest adjustment lever (3) to recline back of seat to desired comfort.
6. While sitting in seat, turn lumbar support adjustment knob (4) to increase or decrease support to lower back.

1— Fore-and-Aft Adjustment Lever
2— Weight Adjustment Knob
3— Backrest Adjustment Lever
4— Lumbar Support Adjustment Knob

TX1205304 —UN—06NOV15

Vinyl Air Suspension Seat

JB92884,0000126 -19-17MAY16-2/3

Air Suspension Seat With Heat—If Equipped

1. Pull up on fore-and-aft adjustment lever (1).
2. Slide seat forward or backward to desired position.
3. Release fore-and-aft adjustment lever to lock in place.

NOTE: Switch power must be on for raising operator seat. Engine does not have to be started.

4. Pull up or push down on weight adjustment knob (2) to adjust seat to weight of operator.
5. Pull up on backrest adjustment lever (3) to recline back of seat to desired comfort.
6. While sitting in seat, turn lumbar support adjustment knob (4) to increase or decrease support to lower back.
7. Push seat heater switch (5) up to activate seat heater. Push seat heater switch to downward position to turn seat heater off.

1— Fore-and-Aft Adjustment Lever
2— Weight Adjustment Knob
3— Backrest Adjustment Lever
4— Lumbar Support Adjustment Knob
5— Seat Heater Switch

TX1205309 —UN—06NOV15

Cloth Air Suspension Seat With Heat

JB92884,0000126 -19-17MAY16-3/3

Dome Light

NOTE: Dome light (1) will turn on when operator sits in seat. Dome light will remain illuminated until engine is started or until 5-minute time-out is reached.

The dome light (1) is located on the right side of the cab ceiling.

Dome light can be turned on by pushing on right or left side of lens. Return dome light to middle position to turn off.

1— Dome Light

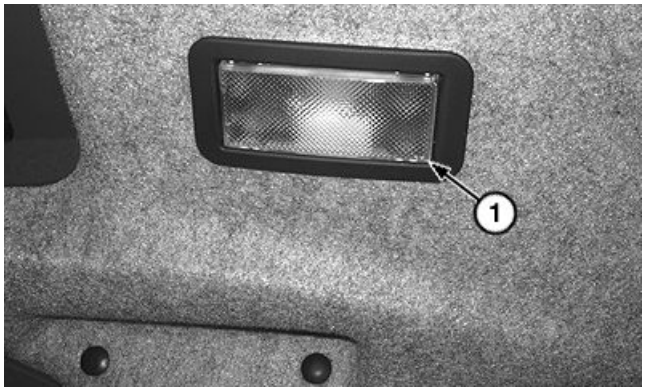

TX1066805A —UN—24OCT09

Dome Light

JB92884,0000125 -19-13NOV18-1/1

Radio—If Equipped

Early Machines

1. Power Button (1)—Press to turn radio on or off.
2. Mute Button (2)—Press to silence radio audio. MUTE message appears on display. If mute feature is active when radio is turned off, the volume returns to the programmed turn on volume level when radio is turned on.
3. Display Button (3)—Press to switch between tuner, auxiliary input, or weather band function modes and clock mode. Frequency, time, and activated functions appear on display.
4. AM/FM Button (4)—Press to change between AM bands (AM1 and AM2) and FM bands (FM1, FM2, and FM3). Press AM/FM button to access tuner mode from any other function mode.
5. Auxiliary Input Button (5)—Press to select auxiliary input mode. To connect a portable device to radio, connect device to the auxiliary audio input jack (15).
6. Weather Band Button (6)—Press to access the weather band mode from any other function mode.
7. Timer Button (7)—Press to access timer mode. Press timer button again to start the timer function; TIMER message flashes in the display. Press timer button again to stop timer (TIMER icon remains in the display without flashing). Press and hold timer button for 3 seconds to reset timer to zero and to remove icon from display.
8. Auxiliary Audio Input Jack (15)—Use to connect portable audio devices.
9. Preset Buttons (16—21)—Six numbered preset buttons store and recall stations for each AM and FM band. To store a station, select a band and then select a station. Press and hold a preset button for 3 seconds. Current station is stored and the corresponding preset number appears in display. To recall a station, select a band and then press a preset button. Radio automatically tunes to the stored station.

Volume Adjustment:

Use the adjustment buttons to increase or decrease volume setting.

- Increase Volume Button (9)—Press to increase the volume setting.
- Decrease Volume Button (10)—Press to decrease the volume setting.

Tuning Radio:

- Increase Manual Tune Frequency Button (11)—Press to tune the next higher radio frequency. Press and hold increase manual tune frequency button for more than 1 second to tune continuously in selected direction.
- Decrease Manual Tune Frequency Button (12)—Press to tune the next lower radio frequency. Press and hold decrease manual tune frequency button for more than 1 second to tune continuously in selected direction.
- Increase Automatic Tune Frequency Button (14)—Press to tune the frequency automatically up to the next strong station.

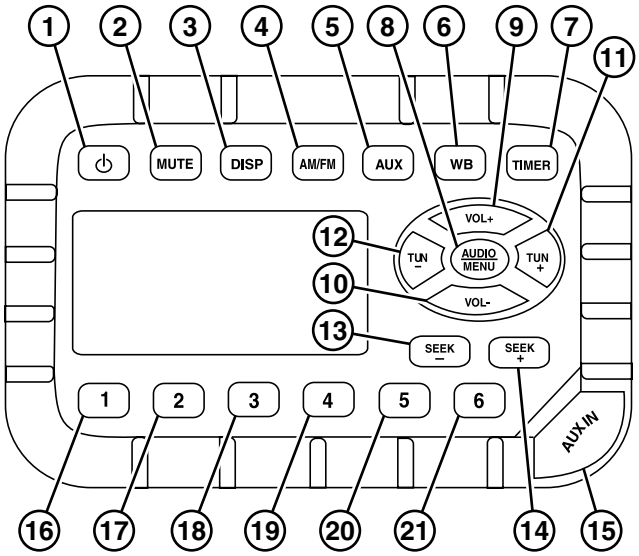

TX1128038 —UN—12DEC12

Radio

1— Power Button
2— Mute Button
3— Display Button
4— AM/FM Button
5— Auxiliary Input Button
6— Weather Band Button
7— Timer Button
8— Audio and Menu Adjustment Button
9— Increase Volume Button
10— Decrease Volume Button
11— Increase Manual Tune Frequency Button
12— Decrease Manual Tune Frequency Button
13— Decrease Automatic Tune Frequency Button
14— Increase Automatic Tune Frequency Button
15— Auxiliary Audio Input Jack
16— Preset Button 1
17— Preset Button 2
18— Preset Button 3
19— Preset Button 4
20— Preset Button 5
21— Preset Button 6

- Decrease Automatic Tune Frequency Button (13)—Press to tune the frequency automatically down to the next strong station.

Audio Adjustment:

1. Press audio and menu adjustment button (8) to step through the audio adjustment options. The following options can be adjusted:
   - Bass
   - Treble
   - Balance (left to right)
2. When desired option appears on display, press increase volume button or decrease volume button to adjust audio feature.
3. When no adjustments have been made for 3 seconds, radio resumes normal operation.

Menu Adjustment:

1. Press and hold audio and menu adjustment button for more than 3 seconds to enter menu adjustment mode.

Continued on next page

JB92884,000012B -19-14AUG20-1/4

2. Press audio and menu adjustment button to step through the menu adjustment options. The following menu options can be adjusted using the menu adjustment mode:
   - Operation Region (USA or Euro)—Select the appropriate operating region.
   - Beep Confirm (on and off)—Select to sound an audible beep each time a button is pressed.
   - Clock Display (12 or 24)—Select a 12-hour or 24-hour clock display.
   - Display Brightness (low, mid, or high)—Select the brightness level of display.
   - Backlight Color (Amber or Green)—Select the backlight color of radio.
   - Turn On Volume (0—40)—Select the desired volume level for radio to assume when radio is powered on.
   - WB Alert (on or off)—Select if the weather band alert feature is activated.
3. When desired menu adjustment option appears on the display, press increase volume button or decrease volume button to adjust that option.

Setting the Clock:

1. Press and hold the display button for more than 3 seconds to enter the clock setting mode (time flashes on display).
2. Hours Adjustment—Press decrease manual tune frequency button until correct hour is displayed.
3. Minutes Adjustment—Press increase manual tune frequency button until correct minute is displayed.
4. When no adjustment is made for 10 seconds, time is set and normal operation resumes.

Continued on next page

JB92884,000012B -19-14AUG20-2/4

Later Machines

1. Power/Mute Button (1)—Press power/mute button to turn radio on. Press and hold button to turn radio off. When radio is on, press and release button to mute the audio. Press button again to restore audio.
2. Radio Station #1/Play/Pause Button (4)—When radio is selected, press radio station #1/play/pause button to recall a memorized radio station. Press and hold button to program a radio station into memory #1. When Bluetooth® is selected, press button to pause or start playback.
3. Menu Button (5)—Press menu button to toggle between bass (BAS), treble (TRE), balance (BAL), equalizer (EQ OFF, ROCK, JAZZ, CLASSICS, POP), and boost (BOOST ON, BOOST OFF).
   Press and hold button to enter second menu: MONO/STEREO, local/distance (LOCAL/DX), AREA USA 1/AREA USA 2/EUROPE, ALARM ON/ALARM OFF, and clock display priority (DISP ON/DISP OFF).
4. Display Area (9)—Display area displays mode information. When radio is selected, the radio frequency is displayed.
   When Bluetooth® is selected, song track information is displayed.
5. AM/FM Button (11)—Press and hold AM/FM button until RADIO appears on display. After a brief moment, an FM or AM station will appear on display.
   Press AM/FM button to select from FM1, FM2, FM3, AM1, or AM2.

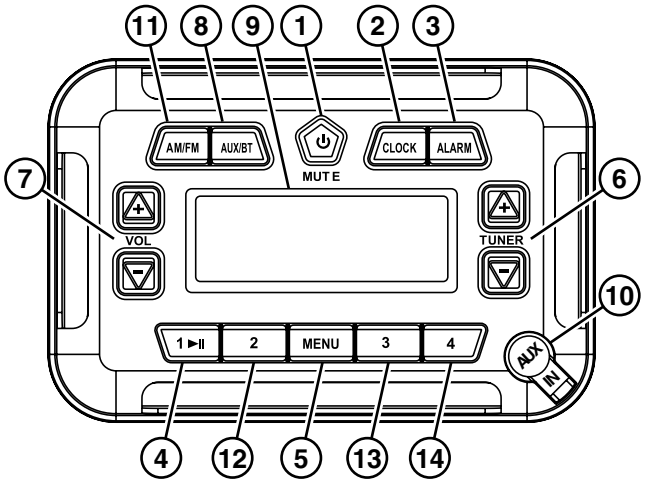

Radio

1— Power/Mute Button
2— Clock Button
3— Alarm Button
4— Radio Station #1/Play/Pause Button
5— Menu Button
6— Tune/Track Button (2 used)
7— Volume Button (2 used)
8— Auxiliary/Bluetooth® Button
9— Display Area
10— Auxiliary Jack
11— AM/FM Button
12— Radio Station Recall Button 2
13— Radio Station Recall Button 3
14— Radio Station Recall Button 4

Volume Adjustment:

Use volume buttons (7) to increase or decrease volume.

- Increase Volume—Press volume + button to increase volume setting.
- Decrease Volume—Press volume - button to decrease volume setting.

Audio Adjustment:

Press menu button to step through audio adjustment options: Bass, Treble, Balance (left to right), Equalizer, and Boost. When desired option appears on display, press increase volume button or decrease volume button to adjust audio feature. When no adjustments have been made for 3 seconds, radio will resume normal operation.

When desired option appears on display, press increase volume button or decrease volume button to adjust that option.

Tuning Radio:

Use tune/track buttons (6) to select preferred station frequency.

When Bluetooth® is selected, press button to select next or previous tracks.

- Automatic Tune Using Seek—Press tune/track + button to scan up to the next strong station and begin playing. Press tune/track - button to scan down to the next strong station.

NOTE: After 5 seconds of inactivity, the tuner reverts back to seek mode and AUTO briefly displays on the liquid-crystal display (LCD).

- Manual Tune—Press and hold the + or - tune/track button (6) until MANUAL appears on the display. Press tune/track + button to tune to a higher frequency station or press tune/track - button to tune to a lower frequency station.
  Hold either button down when in MANUAL mode to move the scan quickly.
- Scanning and Automatically Storing Radio Stations—While unit is in RADIO mode, press and hold auxiliary/Bluetooth® button (8) until tuner begins to scan forward. The tuner will go through all the frequencies, automatically storing in the strongest available stations. The new stored stations will replace stations that were previously stored. When in FM band mode, the 12 strongest frequency stations will be stored: FM1 = 4 stations, FM2 = 4 stations, and FM3 = 4 stations. When in AM band mode, the eight strongest frequency stations will be stored: AM1 = 4 stations and AM2 = 4 stations.
- Memorizing Radio Stations—Tune in desired radio station within FM1, FM2, FM3, AM1, or AM2. Hold anyone of the four radio station recall buttons (4, 12, 13, or 14) until the preset number appears. Selected station is now stored into that button's recall memory (FM = 12 total, AM = 8 total).

Continued on next page

- Stereo/Mono Operation—To switch from stereo to mono reception, press and hold menu button until STEREO appears in the display. Press either volume + or volume - button and MONO will appear in the display. Pressing again will toggle back to STEREO. For weaker FM stereo stations, selecting mono usually improves reception.
- Distance/Local Reception Operation—To eliminate weaker fringe stations when scanning for stations, change radio reception from Distance (DX) to Local (LOCAL). To switch from distance to local reception, press and hold menu button until STEREO or MONO appears on display. Then press button again until DX appears in display. Press volume + or volume - button. LOCAL will appear in the display. Pressing button again will toggle back to DX.

Current Time/Display Selection:

Press and hold menu button to enter second menu. The first screen displayed in the second menu is either STEREO or MONO. Press the MENU until DISP OFF or DISP ON appears on the screen.

Press volume button (7) + or - to select one of two screen appearances:

1. DISP ON—Screen will remain on clock display.
2. DISP OFF—When radio is selected, screen will display radio station.

   When Bluetooth[SM] or auxiliary is selected, screen will display track information.

Setting Clock:

Press clock button (2) to switch between information display and clock.

Press clock button. Current time will appear on display.

Press and hold clock button until the time begins blinking on the display.

Press volume + button to adjust hours and volume - button to adjust minutes. After time is set, press any button to exit time programming feature or unit will automatically exit after 8 seconds of inactivity.

Bluetooth is a trademark of Bluetooth SIG

Setting Alarm:

Press alarm button (3) to switch between information display and alarm clock. Press and hold button to enter alarm adjustment setup or press and hold menu button to enter the second set of programming features. First displayed feature on second menu will be either: STEREO or MONO. Press menu button again continuously until ALARM OFF is displayed. Press volume + or volume - button to toggle to ALARM ON.

Press alarm button (3) to display time.

Press and hold alarm button again until displayed time begins to blink. Press volume + button to adjust hours and volume - button to adjust minutes. After alarm time is set, press any button to exit alarm programming feature or unit will automatically exit after 8 seconds of inactivity.

Pairing Bluetooth® **Devices:**

Open Bluetooth® setup program on mobile device and activate Bluetooth® feature.

With mobile device in range, scan and select AT449150 on mobile device to connect to radio.

When mobile device has been paired, the Bluetooth® icon will appear in radio display.

Press auxiliary/Bluetooth® button (8) until BT AUDIO appears on display. Audio from mobile device can now be played through radio.

Connecting MP3 Player or Other Portable Audio Device:

To connect a portable audio device, connect headphone or line level output of device to auxiliary jack (10) using a 3.5 mm audio patch cord (not included).

Press auxiliary/Bluetooth® button until AUX IN appears in display.

Use radio controls to adjust volume and sound quality levels.

JB92884,000012B -19-14AUG20-4/4

Horn Button

Horn button (1) is located on the left joystick. Push button to sound horn.

1— Horn Button

TX1066807A —UN—24OCT09

Left Joystick

JS90457,0000232 -19-24JAN18-1/1

Rear Camera—If Equipped

CAUTION: This camera is designed to supplement other safety practices and is not intended to be the sole method of collision avoidance. Always be alert and aware of the surroundings when operating this machine to avoid possible injury or death to operator or others.

The rear camera (1) and rear camera display (2) will power up any time switched power is ON. When switched power is ON, the rear camera display will display real-time video of objects behind the machine.

- Menu button (3): Toggles between camera and display settings.
- Left button (4): Sets back light mode to night.
- Right button (5): Sets back light mode to day.
- Down button (6): Decreases back light button by 10%.
- Up button (7): Increases back light button by 10%.
- Select button (8): Toggles the video guidelines state between active and not active.

1— Rear Camera
2— Rear Camera Display
3— Menu Button
4— Left Button
5— Right Button
6— Down Button
7— Up Button
8— Select Button

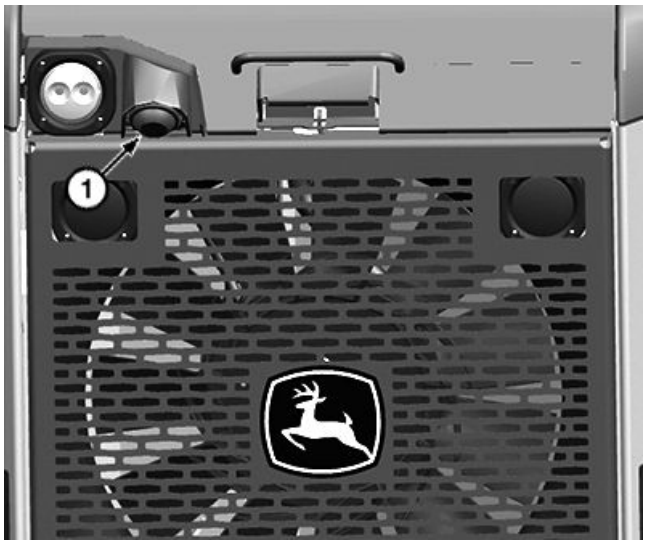

TX1248668A —UN—14DEC17

Rear Camera

TX1217706 —UN—16JUN16

Rear Camera Display

JS90457,0000213 -19-04JAN18-1/1

Beacon—If Equipped

Beacon light is located on the top of the operator's station. Beacon is powered by machine switched power and will be on whenever machine switched power is on.

OUT4001,0000519 -19-13NOV18-1/1

Before Starting Work

Review the operating precautions. See Safety—Operating Precautions (1-3).

Use seat belt when operating machine. Remember to fasten seat belt even during brief periods of use.

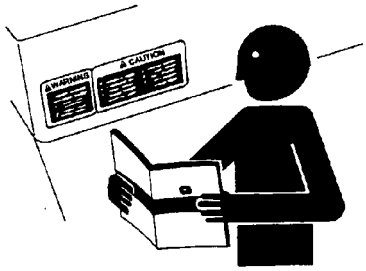

T133556 —UN—24AUG00

Reading Operator's Manual

TX,BEFORE,WORK -19-16MAY23-1/1

Inspect Machine Daily Before Starting

Perform daily maintenance checks. See Maintenance—Every 10 Hours or Daily. (Section 3-4.)

- Inspect rear grille (3) for obstructions.
- Clean engine cover (2).
- Clean operator's station (1), check pedals for freedom of movement, and check fire extinguisher charge (if equipped).
- Inspect seat belt. See Inspect Seat Belt. (Section 4-1.)
- Inspect and clean the cab severe duty door if equipped. See Inspect and Clean Polycarbonate Windows. (Section 4-1.)
- Inspect exhaust stack (4). Check for any clogs or damage to exhaust stack.
- Check fuel level. Remove fuel tank cap (5) and fill with proper fuel if necessary.

Inspect the following before starting:

ELECTRICAL SYSTEM: Check for worn or frayed wires and loose or corroded connections.

HYDRAULIC SYSTEM: Check for leaks, missing or loose clamps, kinked hoses, and lines or hoses that are making contact with each other or other machine parts.

FUEL SYSTEM: Check for leaks, missing or loose clamps, and kinked hoses. Drain water and sediment from primary and auxiliary fuel filters, and check lines or hoses that are making contact with each other or other machine parts.

HARDWARE: Check for loose or missing parts.

LUBRICATION: Check lubrication points on periodic maintenance chart. See Service Machine at Specified Intervals. (Section 3-2.)

SHEET METAL AND TRACKS: Check for bent, broken, loose, or missing parts.

PROTECTIVE DEVICES: Inspect guards, shields, roll-over protective structure (ROPS), and seat belt.

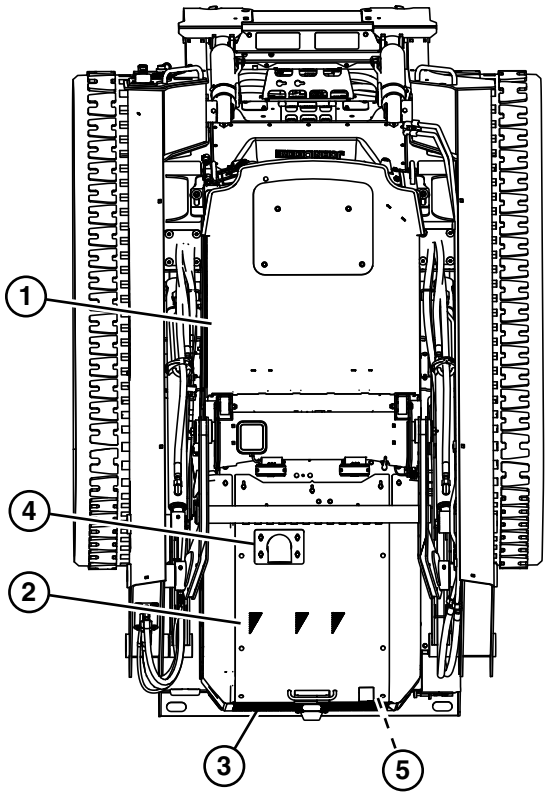

TX1215383 —UN—11MAY16

Machine Inspection

1— Operator's Station
2— Engine Cover
3— Rear Grille
4— Exhaust Stack
5— Fuel Tank Cap

SAFETY: Walk around machine to be sure all bystanders are away from machine area.

JB92884,0000105 -19-03DEC20-1/1

Entering and Exiting Compact Track Loader

CAUTION: Prevent possible injury when entering and exiting machine. Maintain three points of contact at all times. Do not use controls as handholds.

Entering Machine With a Cab Door:

From the side or the front without a bucket attached: Use the boom step (1), boom handhold (2), and door handle (8) for first step. Use cab handhold (6), door handle, and footwell step (5) for next step.

From the front with a bucket attached: Use bucket step (4), boom handhold (2), and door handle (8) for first step. Continue holding boom handhold and door handle, then step onto boom step (1). Use cab handhold (6), door handle, and footwell step (5) for next step.

When the boom is raised on the boom lock: Enter from the front. Use cab handhold (6), door handle (8), and footwell step (5).

Entering Machine Without a Cab Door:

From the side or the front without a bucket attached: Use the boom step (1) and boom handholds (2 and 3) for first step. Use cab handholds (6 and 7) and footwell step (5) for next step.

From the front with a bucket attached: Use bucket step (4) and boom handholds (2 and 3) for first step. Continue holding boom handholds and step onto boom step (1). Use cab handholds (6 and 7) and footwell step (5) for next step.

When the boom is raised on the boom lock: Enter from the front. Use cab handholds (6 and 7) and footwell step (5).

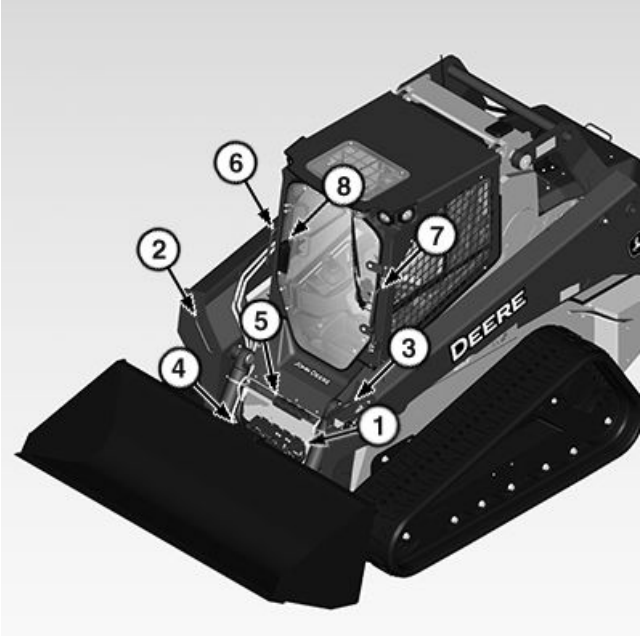

TX1216905 —UN—06JUN16

Entering Compact Track Loader

1— Boom Step	**5— Footwell Step**
2— Boom Handhold	**6— Cab Handhold**
3— Boom Handhold	**7— Cab Handhold**
4— Bucket Step	**8— Door Handle**

Exiting the Machine:

CAUTION: Avoid possible injury from unexpected boom movement. Always lower boom to the ground or onto boom lock. Always engage the park brake and stop the engine before exiting the machine.

1. Engage park brake and switch power to OFF position.
2. Use handholds on inside and outside the cab for support. Step onto the footwell step first, then boom step, then bucket step (if equipped), and then onto the ground.

JB92884,0000140 -19-16JUN16-1/1

Engine Break-In Period

IMPORTANT: To avoid engine damage, it is critical to observe the engine break-in period. Extra care during the first 500 hours of operation will result in more satisfactory long-term engine performance and life.

1. Operate the machine at heavy or normal loads with minimal idling during the break-in period. During the first 20 hours, avoid prolonged periods of engine idling or sustained maximum load operation. If engine will idle longer than 5 minutes, stop engine.
2. Check engine oil level more frequently during the engine break-in period.
3. Change oil and oil filter after first 500 hours of operation (maximum). Fill crankcase with the normal seasonal viscosity grade oil. See Diesel Engine Oil. (Section 3-1.)
4. Watch coolant temperature gauge closely. If coolant temperature rises above specified limits on the gauge, reduce load on engine. Unless temperature drops quickly, stop the engine and determine the cause before resuming operation. See Miscellaneous—Troubleshooting.
5. Watch for low oil pressure warning during operation.
6. Check belt for proper alignment and seating in pulley grooves.

TX,BREAKIN,YANMAR -19-23JUN20-1/1

Starting the Engine

NOTE: Upon initial start-up, there may be a delayed increase in engine speed once the request for engine speed increase is given.

Key Start

The engine control unit (ECU) will default engine speed to slow idle on engine start-up regardless of engine speed control dial position. Move engine speed control dial to slow idle position and then increase the setting to the desired speed to get the engine speed to increase.

1. Fasten seat belt.
2. Lower interlocking seat bar.
3. Be sure all joysticks/control levers and pedals are in neutral position.
4. Engage park brake.
5. Turn engine speed control dial (1) to slow idle position.
6. Turn switch power to RUN position, but do not crank engine.
7. Check engagement and monitor unit (EMU). Engine low oil pressure indicator will be lit until engine starts.

IMPORTANT: Avoid possible machine damage. Do not crank starter continuously for more than 30 seconds or damage to starter may occur.

If engine does not start within 30 seconds, turn key switch to OFF position and allow starter to cool for 65 seconds before trying again.

Do not use ether or any other type of starting fluid on engines.

Do not tow the machine to start. Damage to hydrostatic system will occur.

TX1126173A —UN—16NOV12

Control Panel—Key Start

1— Engine Speed Control Dial 2— Key Switch

8. Turn key switch (2) to START position.
9. Release key when engine starts.
   a. A monitor indicator check is performed each time machine is started.

IMPORTANT: To prevent damage of hydraulics and engine in temperatures below 0°C (32°F), run engine at slow idle for 10 minutes before operating controls.

   b. Always allow engine to warm-up before applying a load.
10. Run at 1/3 speed for 30 seconds. Do not run at fast or slow idle. Do not accelerate rapidly during warm-up.
11. Operate machine at less-than-normal loads and speeds until engine is at normal operating temperature.

Continued on next page

JS90457,000024E -19-23APR20-1/2

Keyless Start

The engine control unit (ECU) will default engine speed to slow idle on engine start-up regardless of engine speed control dial position. Move engine speed control dial to slow idle position and then increase the setting to the desired speed to get the engine speed to increase.

1. Fasten seat belt.
2. Lower interlocking seat bar.
3. Be sure all joysticks/control levers and pedals are in neutral position.
4. Turn engine speed control dial (1) to slow idle position.
5. Press engine start switch (2) to turn switched power ON, but do not crank engine.
6. Check engagement and monitor unit (EMU). Engine low oil pressure indicator will be lit until engine starts.

IMPORTANT: Avoid possible machine damage. Do not crank starter continuously for more than 30 seconds or damage to starter may occur.

If engine does not start within 30 seconds, press engine stop switch and allow starter to cool for 65 seconds before trying again.

Do not use ether or any other type of starting fluid on engines.

Do not tow the machine to start. Damage to hydrostatic system will occur.

7. Press engine start switch.
8. Release switch when engine starts.

TX1205430 —UN—10NOV15

Control Panel—Keyless Start

1— Engine Speed Control Dial 2— Engine Start Switch

a. A monitor indicator check is performed each time machine is started.

IMPORTANT: To prevent damage of hydraulics and engine in temperatures below 0°C (32°F), run engine at slow idle for 10 minutes before operating controls.

b. Always allow engine to warm-up before applying a load.

9. Run at 1/3 speed for 30 seconds. Do not run at fast or slow idle. Do not accelerate rapidly during warm-up.
10. Operate machine at less-than-normal loads and speeds until engine is at normal operating temperature.

JS90457,000024E -19-23APR20-2/2

Cold Weather Starting

Key Start

NOTE: It is normal for battery voltage indicator to light when glow plugs are active.

NOTE: For recommended oils for improving starting performance, see Operating in Cold Temperature Climates. (Section 3-1.)

IMPORTANT: Avoid possible machine damage. Do not crank starter continuously for more than 60 seconds or the starter may be damaged.

If engine does not start within 60 seconds, turn key switch to OFF position and allow starter to cool for 65 seconds before trying again.

Do not use ether or any other type of starting fluid on engines.

Do not tow the machine to start or damage to hydrostatic system will occur.

IMPORTANT: To prevent damage to hydraulics and engine in temperatures below 0°C (32°F), run engine at slow idle for 10 minutes before operating controls.

The engine control unit (ECU) will default engine speed to slow idle on engine start-up regardless of engine speed control dial position. Move engine speed control dial to slow idle position and then increase the setting to the desired speed to get the engine speed to increase.

1. Turn key switch to RUN position. If engine coolant temperature is low, the engagement and monitor unit (EMU) will display a glow plug icon, text stating WAIT TO START, and the countdown of the seconds remaining before the engine should be started.
2. Once countdown is completed, the EMU will display text stating READY TO START ENGINE for 2 seconds and then return to the normal runtime screen.
3. Turn key switch to the START position and release key when engine starts.

Keyless Start

NOTE: It is normal for battery voltage indicator to light when glow plugs are active.

NOTE: For recommended oils for improving starting performance, see Operating in Cold Temperature Climates. (Section 3-1.)

IMPORTANT: Avoid possible machine damage. Do not crank starter continuously for more than 60 seconds or the starter may be damaged.

If engine does not start within 60 seconds, press engine stop switch and allow starter to cool for 65 seconds before trying again.

Do not use ether or any other type of starting fluid on engines.

Do not tow the machine to start or damage to hydrostatic system will occur.

IMPORTANT: To prevent damage to hydraulics and engine in temperatures below 0°C (32°F), run engine at slow idle for 10 minutes before operating controls.

The engine control unit (ECU) will default engine speed to slow idle on engine start-up regardless of engine speed control dial position. Move engine speed control dial to slow idle position and then increase the setting to the desired speed to get the engine speed to increase.

1. Press engine start switch to turn switched power ON. If engine coolant temperature is low, the engagement and monitor unit (EMU) will display a glow plug icon, text stating WAIT TO START, and the countdown of the seconds remaining before the engine should be started.
2. Once countdown is completed, the EMU will display text stating READY TO START ENGINE for 2 seconds and then return to the normal runtime screen.
3. Press engine start switch and release switch when engine starts.

JK47244,000032E -19-13FEB18-1/1

Engine Block Heater—If Equipped

CAUTION: Prevent possible injury from electrical shock. Use grounded cord and inspect for damage before connecting to power source.

IMPORTANT: Prevent property damage as a result of possible fire from an overheated electrical cord. Use a heavy-duty, grounded cord to connect heater to electrical power.

Supply voltage for engine block heater can be 220 V or 110 V. Ensure the correct engine block heater is used for the correct supply voltage.

NOTE: Engine block heater is recommended when ambient temperature is below 5°F (-15°C) or at altitudes above 1820 m (6000 ft.).

The engine block heater allows for quicker start and warm-up during cold weather temperatures.

Before starting engine, connect engine block heater cord (1) to electrical power for a minimum of 4 hours when ambient temperature is between 5°F (-15°C) and -13°F (-25°C). Connect engine block heater cord to electrical power for a minimum of 10 hours when ambient temperature is below -13°F (-25°C).

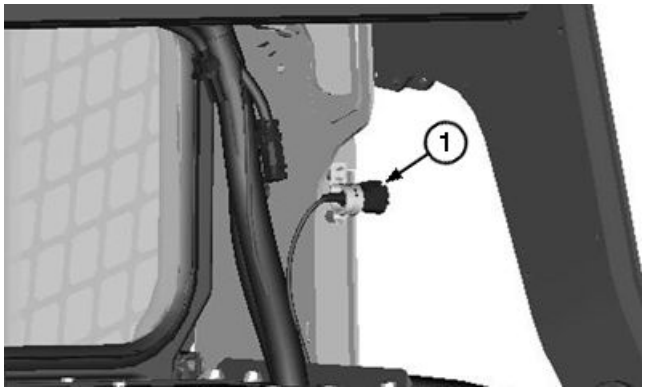

Engine Block Heater Cord

TX1139394A —UN—26JUN13

1— Engine Block Heater Cord

JK47244,00002C8 -19-07OCT13-1/1

Engine Speed Control

TX1205449 —UN—11NOV15

Engine Speed Control Dial

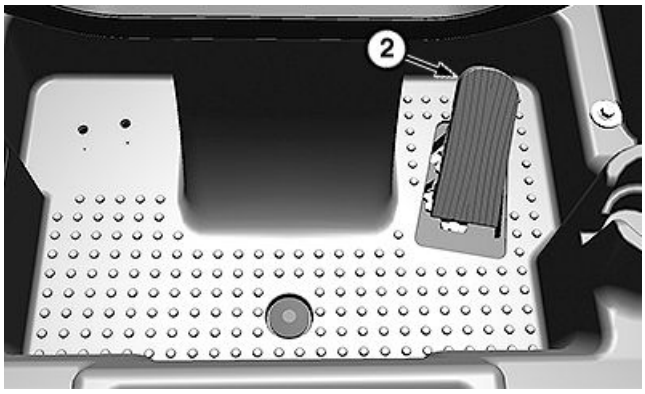

TX1249685A —UN—04JAN18

Engine Speed Control Pedal

NOTE: Upon initial start-up, there may be a delayed increase in engine speed once the request for engine speed increase is given.

Electrohydraulic (EH) Control Machine

The engine control unit (ECU) will default engine speed to slow idle on engine start-up regardless of engine speed control dial position. Move engine speed control dial to slow idle position and then increase the setting to the desired speed to get the engine speed to increase.

There are two ways to control engine speed:

- Engine speed control dial (1)
- Engine speed control pedal (2)

Press accelerator/decelerator mode switch (4) to activate acceleration mode (left light-emitting diode [LED] illuminated). In acceleration mode, engine speed will increase when the engine speed control pedal is pressed.

Press accelerator/decelerator mode switch to activate deceleration mode (right LED illuminated). In deceleration mode, engine speed will decrease when the engine speed control pedal is pressed.

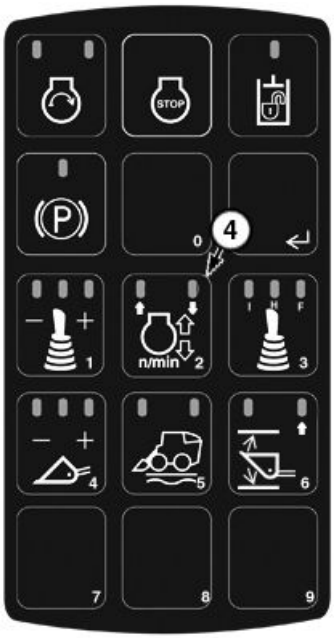

TX1237253 —UN—12APR17

Sealed Switch Module (SSM)

1— Engine Speed Control Dial
2— Engine Speed Control Pedal
4— Accelerator/Decelator Mode Switch

JS90457,0000250 -19-19FEB18-1/1

Stopping the Engine

1. Move joysticks to neutral position.
2. Move auxiliary hydraulic controls to neutral position.

CAUTION: Prevent possible injury from unexpected boom movement. Never exit machine with boom raised unless boom is resting on boom lock.

3. Lower boom completely to ground. If boom is to remain in raised position, use boom lock. See Boom Lock in this section.
4. Engage park brake.
5. Turn engine speed control dial to slow idle position.
   - If equipped with key start, turn key switch to OFF position.
   - If equipped with keyless start, press engine stop switch.

IMPORTANT: Prevent engine damage. Do not bypass cool down mode unless absolutely necessary. Cool down allows engine to cool down before shutdown. The system automatically provides the necessary time needed for engine cool down.

NOTE: If necessary, an immediate engine shutdown can be performed (cool down mode is bypassed) by pushing and holding the engine stop switch for longer than 1 second or pushing the engine stop switch again.

6. Engine enters turbo cool down mode as follows:
   - The engagement and monitor unit (EMU) displays “TURBO COOLING SHUTDOWN IN XX” message.
   - Machine will continue to run during cool down mode, but will not respond to commands. Machine control can be resumed and the shutdown timer cleared by pressing the start switch.
   - When countdown timer reaches zero, the engine stops and the ignition turns off.

   The length of the turbo cool down depends on machine usage. The maximum countdown time is 2 minutes.
7. Raise interlocking seat bar.
8. Release seat belt.

JS90457,000024F -19-13FEB18-1/1

Required Machine Stop Warning

NOTE: Engine emissions system malfunction indicator is for machines equipped with F or L engine.

Machine Stop Mandate Occurs

IMPORTANT: In some situations, machine engine power may be reduced as described. On notification, immediately place the machine in a safe state and move it to a safe location. A mandated machine stop can only be removed by a service technician.

Engine emissions system malfunction indicator illuminates when an emission-related fault occurs.

RG22491 —UN—21AUG13

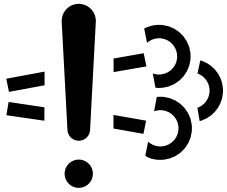

Engine Emissions System Malfunction Indicator

TX,MACH,STOP,WARNING -19-29OCT24-1/6

Warning indicator illuminates when a condition exists which requires operator action.

RG22492 —UN—21AUG13

Warning Indicator

Continued on next page

TX,MACH,STOP,WARNING -19-29OCT24-2/6

Engine stop indicator illuminates when a condition exists which requires immediate operator action and service.

RG22493 —UN—21AUG13

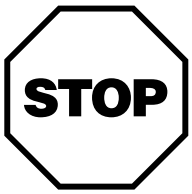

Engine Stop Indicator

TX,MACH,STOP,WARNING -19-29OCT24-3/6

Emission System Fault Has Occurred

Four hours or less remaining, engine emissions system malfunction and warning indicators are illuminated to warn operator of emissions-related fault. Two hours or less when pop-up is displayed.

- Engine power is normal.
- Machine operation is normal.
- Place machine in a safe state.
- Contact a John Deere dealer or other service provider.

RG26361 —UN—04SEP14

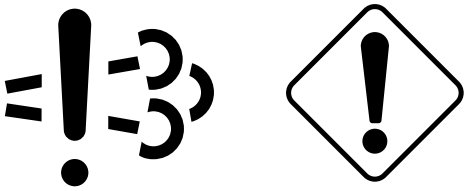

Engine Emissions System Malfunction and Warning Indicators

TX,MACH,STOP,WARNING -19-29OCT24-4/6

Sixty minutes remaining, engine emissions system malfunction and engine stop indicators are illuminated and alarm sounds to warn operator of emissions-related fault. Sixty minutes or less from when pop-up is displayed until final power restriction.

- Engine power and torque will be reduced.
- Key Off—Key On will temporarily provide full power.
- Place machine in a safe state.
- Contact a John Deere dealer or other service provider.

RG26972 —UN—26MAR15

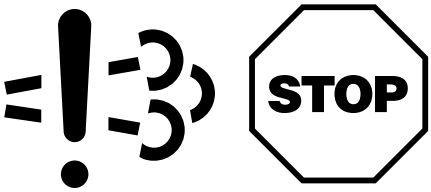

Engine Emissions System Malfunction and Engine Stop Indicators

TX,MACH,STOP,WARNING -19-29OCT24-5/6

Two minutes or less remaining, engine emissions system malfunction and engine stop indicators are illuminated and alarm sounds to warn operator of emissions-related fault which has not been corrected. “DEF System Fault-Engine Power and Speed Limited” is displayed on machines with monitors.

- Engine power is idle only.
- Place machine in a safe state.
- Contact a John Deere dealer or other service provider.

RG26972 —UN—26MAR15

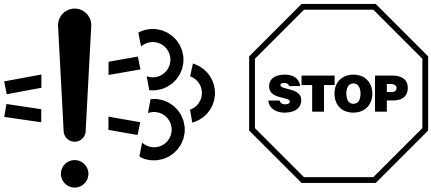

Engine Emissions System Malfunction and Engine Stop Indicators

TX,MACH,STOP,WARNING -19-29OCT24-6/6

Exhaust Filter

IMPORTANT: Avoid machine damage. Engine cover must be closed during exhaust filter cleaning.

The exhaust filter is a critical component of the engine's emissions control system, which is required to meet governmental emissions regulations. The exhaust filter captures soot and ash to prevent its release into the atmosphere. The soot and ash must be eliminated from the exhaust filter to keep it functioning properly. The process of eliminating collected soot is called exhaust filter cleaning. There are four types of exhaust filter cleaning available to the operator:

- **PASSIVE CLEANING**
- **ENHANCED PASSIVE CLEANING**
- **ACTIVE CLEANING**
- **PARKED CLEANING**

There are three soot levels to describe the amount of restriction in the exhaust filter. These levels determine the type of cleaning that is required:

- LOW
- MODERATE
- HIGH

NOTE: If exhaust filter restriction reaches HIGH soot level, a diagnostic trouble code (DTC) will appear, and an authorized John Deere dealer should be contacted.

For more information, see Exhaust Filter (EMU). (Section 2-3.)

AUTO CLEANING

Auto cleaning is set from the factory in the monitor menu to be enabled. Different settings can be chosen for the default state after a power cycle. These settings are:

□ ENABLE AUTO CLEAN
□ DISABLE AUTO CLEAN

NOTE: If auto cleaning is set to disabled, machine will not revert back to enabled after a power cycle.

Passive, enhanced passive, and active cleaning are automatically performed as needed with auto cleaning enabled and no interaction required from the operator. An exhaust filter cleaning indicator may illuminate on the gauge and indicator display when the system is actively performing a cleaning. Machine can be operated as normal. Exhaust filter cleaning indicator will turn off when exhaust filter cleaning is complete and exhaust temperatures return to normal.

If operating in conditions where it may be unsafe for elevated exhaust temperatures, auto cleaning can be disabled using the engagement and monitor unit (EMU) menu. If the filter restriction reaches the MODERATE soot level with auto cleaning disabled, a pop-up will appear on the display monitor stating that auto cleaning needs to be enabled. For more information, see Exhaust Filter Auto Cleaning (EMU). (Section 2-3.)

NOTE: Disabling exhaust filter auto cleaning is not preferred. Whenever possible, auto cleaning should be enabled to keep soot buildup to a minimum and to increase overall machine uptime.

In addition to the cleaning procedures, the exhaust filter also requires maintenance to remove accumulated ash, which is a noncombustible result of additives used in crankcase lubrication oils and the fuel. Ash removal CANNOT be performed by the operator. For more information on exhaust filter ash removal, see Service Exhaust Filter. (Section 3-3.)

PASSIVE CLEANING

During normal machine operation, the exhaust heat will naturally clean the soot build up in the exhaust filter.

NOTE: Unnecessary idling can cause exhaust filter soot to accumulate. For the best possible exhaust filter operation, which requires the least amount of operator interaction, idling should be kept to a minimum.

ENHANCED PASSIVE CLEANING

IMPORTANT: Avoid machine damage. Do not stop engine when exhaust filter cleaning indicator illuminates.

Enhanced passive cleaning will initiate during normal machine operation when soot levels are above passive cleaning. The air throttle closes and injection timing changes to increase exhaust gas temperature. The exhaust filter cleaning indicator may illuminate.

Machine requirements:

- Auto cleaning must be enabled. See Exhaust Filter (EMU). (Section 2-3.)
- Engine must remain running.

ACTIVE CLEANING

IMPORTANT: Avoid machine damage. Do not stop engine when exhaust filter cleaning indicator illuminates.

IMPORTANT: Avoid machine damage. Engine cover must be closed during exhaust filter cleaning.

Active cleaning will initiate during normal machine operation when soot levels are above passive and enhanced passive cleaning levels or every 100 hours.

- Air throttle closes.
- Injection timing changes.
- In-cylinder fuel dosing occurs.
- Engine speed increases to an elevated slow idle and stays above elevated slow idle until active cleaning has completed.
- EMU may display elevated idle.
- Exhaust filter cleaning indicator may illuminate.

Continued on next page

Machine requirements:

- Auto cleaning must be enabled. See Exhaust Filter (EMU). (Section 2-3.)
- Engine must remain running.

PARKED CLEANING

IMPORTANT: Avoid machine damage. Do not stop engine when exhaust filter cleaning indicator illuminates.

CAUTION: Servicing machine during exhaust filter parked cleaning can result in serious personal injury. Avoid exposure and skin contact with hot gases and components.

During exhaust filter parked cleaning, the engine may run at elevated idle and hot temperatures for an extended period of time. Exhaust gases and exhaust filter components may reach temperatures hot enough to burn people and ignite or melt common materials.

IMPORTANT: Avoid machine damage. Engine cover must be closed during exhaust filter cleaning.

Parked cleaning can be initiated when the exhaust filter restriction reaches either LOW or MODERATE soot levels.

When parked cleaning is required, the engine may derate and the operator may be prompted to perform a parked cleaning. EMU displays exhaust filter restricted indicator for 5 seconds, every 10 minutes, until parked cleaning is performed.

IMPORTANT: Initiating a parked cleaning is not advised if the filter restriction is at LOW and a parked cleaning has occurred within 50 hours of runtime.

Parked cleaning is prompted by the EMU and initiated by the operator. Parked cleaning is most commonly initiated after extended operation with exhaust filter auto cleaning disabled, frequent engine shutdowns have occurred while the auto cleaning process was active, or if machine has been running at lower engine idles for extended periods of time.

The initial parked cleaning menu allows operator to automatically shutdown or not to shutdown after a parked cleaning. See Exhaust Filter Parked Cleaning (EMU). (Section 2-3.)

During the cleaning process, the engine speed will be controlled automatically and the machine must remain parked to complete the procedure. Complete cleaning time takes approximately 1 hour, but will vary on several criteria including fuel type, oil type, duty cycle, and the number of previously aborted exhaust filter cleaning requests.

Move machine to a well ventilated and safe location along with the following requirements:

- Auto cleaning must be enabled. See Exhaust Filter (EMU). (Section 2-3.)
- Park brake applied and machine remains parked.
- Engine must remain running.
- Set engine speed to slow idle.
- Coolant temperature must be at 60°C (140°F) or higher.

The following occurs during parked cleaning:

- Air throttle closes.
- Injection timing changes.
- In-cylinder fuel dosing occurs.
- Engine speed increases to an elevated slow idle and stays above elevated slow idle until active cleaning has completed.
- EMU may display elevated idle.
- EMU will display exhaust filter cleaning progress bar.
- Exhaust filter cleaning indicator may illuminate.

The cleaning process will continue until one of the following conditions exist:

- Auto cleaning is disabled in the EMU.
- Engine speed control dial is moved above the lowest position.
- Engine is shut off by operator (not recommended).
- Until there is no soot restriction in the exhaust filter.
- Park brake released.
- Parked cleaning is aborted due to a malfunction.
- Engine runs out of fuel.

When parked cleaning procedure is complete, engine will automatically return to slow idle and EMU displays parked cleaning is complete. Machine is ready to return to operation.

IMPORTANT: Avoid engine damage. If machine will NOT be returning to operation immediately after a parked cleaning procedure, allow the engine and exhaust filter to return to normal operating temperatures BEFORE stopping engine.

Avoid disabling the auto cleaning process unless absolutely necessary. Repeated disabling of the auto cleaning process or ignoring prompts to perform a parked cleaning procedure will cause engine power limitations and can eventually lead to dealer required service cleaning.

Ash Removal

The exhaust filter cleaning procedures described previously, clean the soot from the machine's exhaust filter. The exhaust filter also traps ash deposits over time, which are not removed during an exhaust filter cleaning. When the exhaust filter has been run for several thousand hours, these ash deposits can restrict engine performance and must be removed. For more information on ash removal, see Service Exhaust Filter. (Section 3-3.)

JB92884,0000159 -19-06DEC18-2/2

Service ADVISOR™ Remote (SAR) Software Delivery Process

Theory of Operation

Service ADVISOR™ is a diagnostic tool used by John Deere dealers to perform diagnostics as well as updates to machine settings and software. Dealers can access diagnostic trouble codes and diagnostic addresses, create readings and recordings, and program controllers. This technology consists of both software and hardware. Technicians attend a minimum of 8 hours of training to become certified in utilizing this tool.

Service ADVISOR Remote (SAR) is a function of Service ADVISOR. SAR allows the dealer technician to connect to a SAR-enabled machine via the JDLink™ network to remotely access diagnostic trouble code information and record diagnostic data as well as program controllers.

Similar to software (payload) updates in the computer industry, SAR enables John Deere to remotely deliver updated software via the JDLink hardware on board. Remote programming gives John Deere the ability to update software to enhance the performance of the machine. This capability can be used to reprogram most machine controllers. The user actively participates with the dealer in this process by installing the software update.

Service ADVISOR is a trademark of Deere & Company
JDLink is a trademark of Deere & Company

NOTE: Some vehicle controllers may not be compatible for SAR reprogramming.

For more information about Service ADVISOR Remote, see an authorized John Deere dealer.

Vehicle Reprogramming

NOTE: Factory setting is set to always accept software downloads.

Normal machine operation can continue during the software download process.

Customer will be notified by John Deere or a John Deere dealer of pending software updates with appropriate installation instructions via letter or phone.

Customer can determine the appropriate time and place to install the new software on the machine. For more information, see Software Delivery (EMU). (Section 2-3.)

Once the customer initiates installation of the software, SAR will start and manage the installation of the new payload to the appropriate machine controllers.

NOTE: Software download speed capability depends on JDLink cellular coverage.

DB84312,0000292 -19-14NOV18-1/1

Boom Lock

Use boom lock (2) when it is necessary to leave machine with boom in a raised position.

Locking boom in raised position

1. Remove any attachment.
2. Park machine on level surface.
3. Raise boom a short distance above boom lock.
4. Pull out on boom lock lever (1), rotate towards seat to extend boom lock to locked position.
5. Slowly lower boom onto boom lock.

Disengaging boom lock

1. Raise boom a short distance off of boom lock.
2. Rotate boom lock lever away from seat to retract the boom lock to the unlocked position.
3. Slowly lower boom to the ground.

1— Boom Lock Lever **2— Boom Lock**

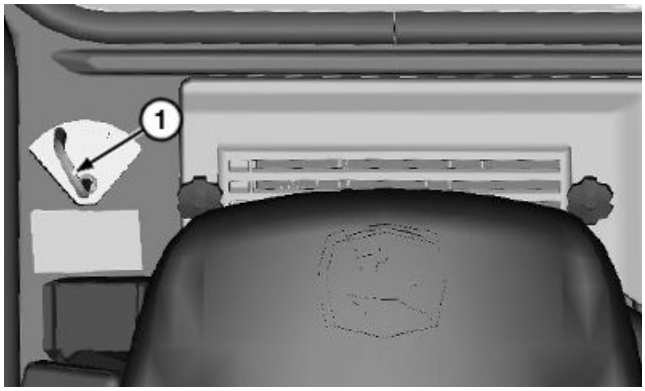

TX1149260A —UN—16DEC13

Boom Lock Lever

TX1139724 —UN—02JUL13

Boom Lock

JK47244,00002FE -19-13DEC13-1/1

Boom Release

CAUTION: Prevent possible injury from unexpected boom movement. Never exit machine with boom raised unless boom is resting on boom lock.

Boom release is to be used when boom is in a partially raised position and engine is stopped and will not start.

1. Close cab door (if equipped).
2. Fasten seat belt.
3. Lower interlocking seat bar.
4. Loosen retainer clip (1) from boom release cover in lower left side of cab. Remove cover.
5. Pull boom release valve (2) and hold.

NOTE: Boom lower function will vary based on machine control pattern.

6. Lower boom. If boom does not lower, see an authorized John Deere dealer.

1— Retainer Clip **2— Boom Release Valve**

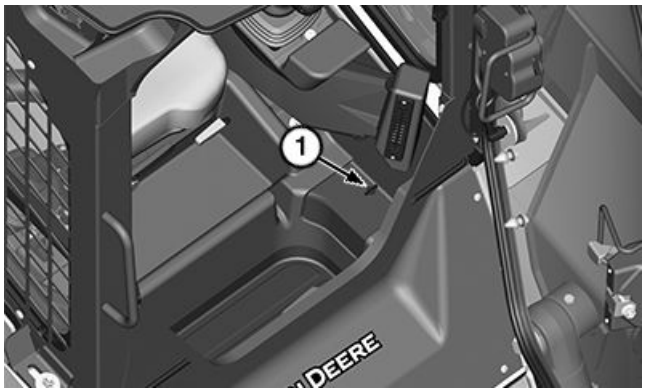

TX1216734 —UN—02JUN16

Boom Release Cover

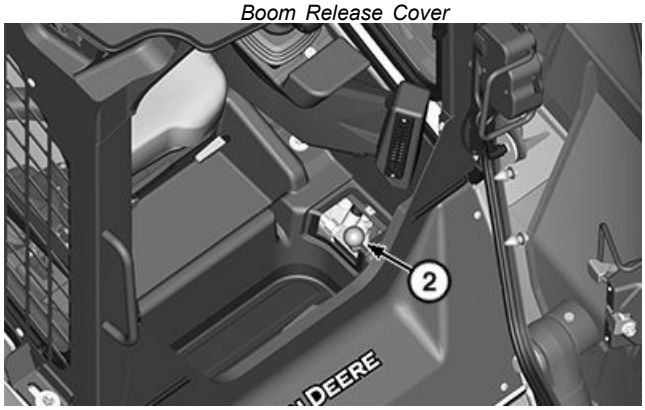

TX1216735 —UN—02JUN16

Boom Release Valve

JS90457,0000247 -19-13FEB18-1/1

Steering—EH Controls

CAUTION: Avoid possible injury from unexpected machine movement. If machine is equipped with joystick performance package, be aware that there are two control patterns available. Always verify control response before operating machine.

Depending on machine configuration, there are two possible control patterns: electrohydraulic (EH) hands only (ISO pattern) controls or EH hands only (H pattern) controls.

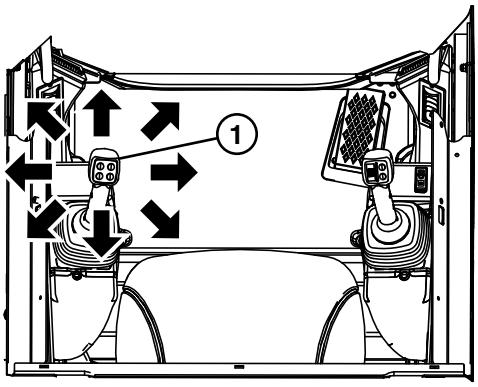

TX1126816 —UN—18DEC12

EH Hands Only (ISO pattern) Controls

1— Left Joystick

EH Hands Only (ISO Pattern) Controls

NOTE: The left joystick (1) controls left and right drive.

- Move left joystick (1) in the direction of desired travel.
- Slowly return left joystick to neutral position to stop.

JS90457,00001DA -19-23MAR18-1/2

EH Hands Only (H Pattern) Controls

NOTE: The left joystick (1) controls left drive and the right joystick (2) controls right drive.

- Push both joysticks (1 and 2) forward at the same time to go forward.
- Pull both joysticks back at the same time to go backward.
- Push one joystick forward and pull the other joystick back at the same time to make a short turn.
- Slowly return joysticks to neutral position to stop.

1— Left Joystick **2— Right Joystick**

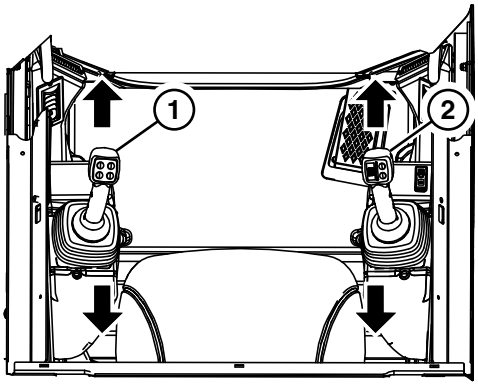

TX1126817 —UN—18DEC12

EH Hands Only (H pattern) Controls

JS90457,00001DA -19-23MAR18-2/2

Operating Boom—EH Controls

Depending on machine configuration, there are two possible control patterns: electrohydraulic (EH) hands only (ISO pattern) controls or EH hands only (H pattern) controls.

EH Hands Only (ISO Pattern) Controls

The right joystick (1) controls the boom:

- Move joystick forward to lower boom.
- Move joystick backward to raise boom.
- Boom will move faster the farther the joystick is moved.

Float Position:

Relieves down pressure on boom cylinders and allows boom and attachment to float with contour of the ground.

NOTE: Float function will not activate if ride control is on.

NOTE: Do not press and hold float switch (2). Holding float switch can result in a diagnostic trouble code (DTC).

To activate float:

1. Activate boom down motion.
2. Press and release float switch (2).
3. Allow joystick to move to neutral position.

NOTE: Pressing float switch again will not deactivate float.

To deactivate float:

1. Move right joystick a minimum of 10% either forward or backward.

1— Right Joystick **2— Float Switch**

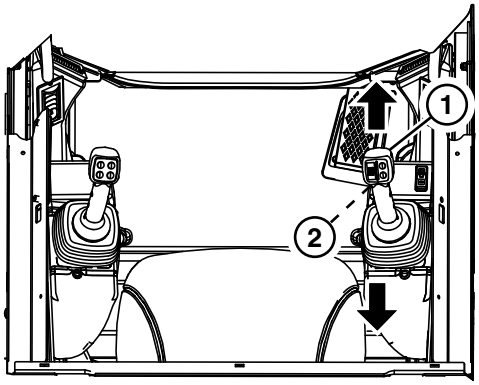

TX1126818 —UN—18DEC12

Right Joystick

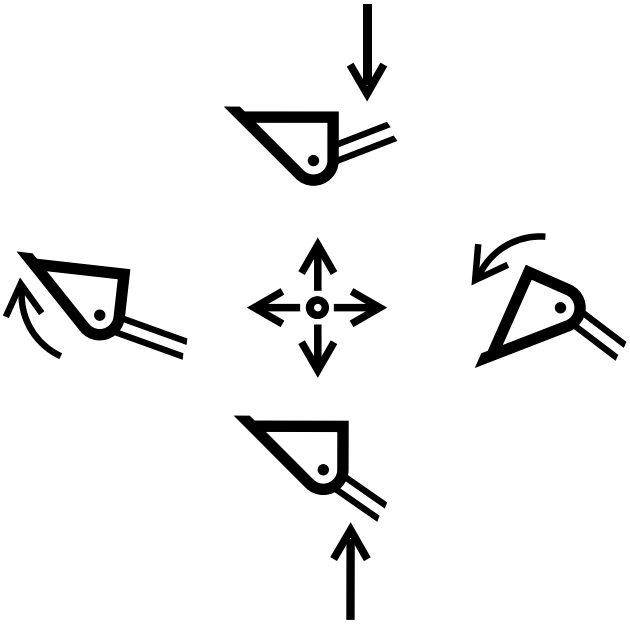

TX1067123 —UN—04NOV09

Right Joystick Operation—ISO Pattern

Continued on next page

JS90457,00001DB -19-13FEB18-1/2

EH Hands Only (H Pattern) Controls

The left joystick (1) controls the boom:

- Pivot joystick to the left to raise boom.
- Pivot joystick to the right to lower boom.
- Boom will move faster the farther the joystick is moved.

Float Position:

Relieves down pressure on boom cylinders and allows boom and attachment to float with contour of the ground.

NOTE: Float function will not activate if ride control is on.

NOTE: Do not press and hold float switch (2). Holding float switch can result in a diagnostic trouble code (DTC).

To activate float:

1. Activate boom down motion.
2. Press and release float switch (2).
3. Allow joystick to move to neutral position.

NOTE: Pressing float switch again will not deactivate float.

To deactivate float:

1. Move left joystick a minimum of 10% either left or right.

1— Left Joystick **2— Float Switch**

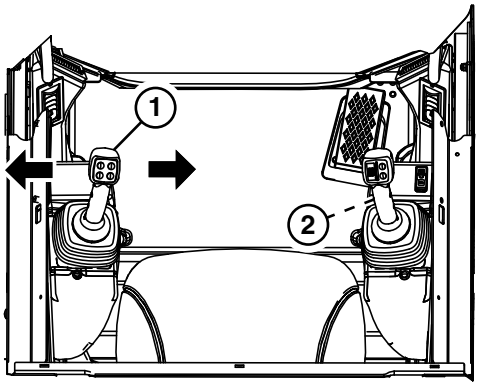

Left Joystick

TX1126819 —UN—18DEC12

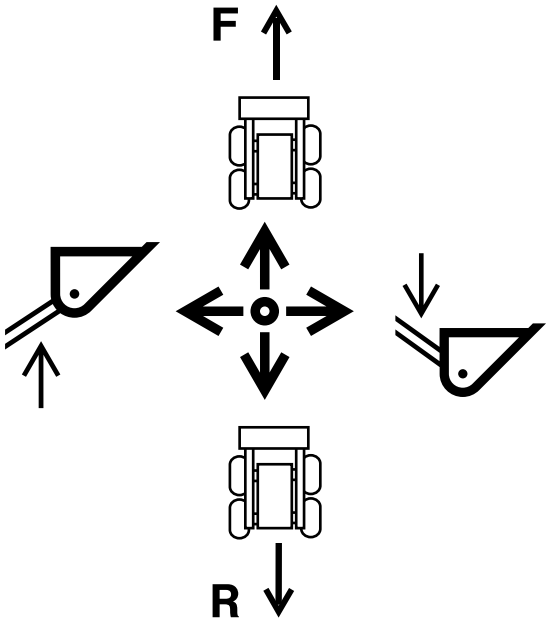

Left Joystick Operation—H Pattern

TX1067122 —UN—04NOV09

JS90457,00001DB -19-13FEB18-2/2

Operating Bucket—EH Controls

Depending on machine configuration, there are two possible control patterns: electrohydraulic (EH) hands only (ISO pattern) controls or EH hands only (H pattern) controls.

EH Hands Only (ISO Pattern) Controls

The right joystick (1) controls the bucket:

- Pivot joystick left to roll back bucket.
- Pivot joystick right to dump bucket.
- Bucket will move faster the farther the joystick is moved.

1— Right Joystick

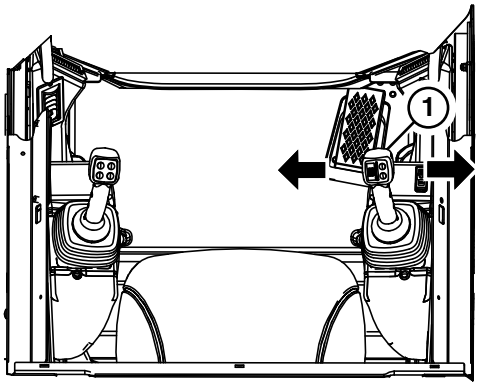

Right Joystick

TX1126821 —UN—18DEC12

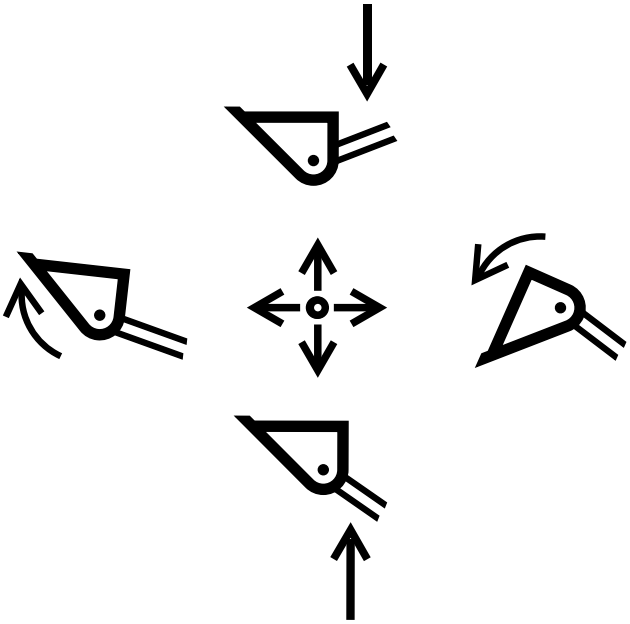

Right Joystick Operation—ISO Pattern

TX1067123 —UN—04NOV09

Continued on next page

JS90457,00001DC -19-13FEB18-1/2

EH Hands Only (H Pattern) Controls

The right joystick (1) controls the bucket:

- Pivot joystick left to roll back bucket.
- Pivot joystick right to dump bucket.
- Bucket will move faster the farther the joystick is moved.

1— Right Joystick

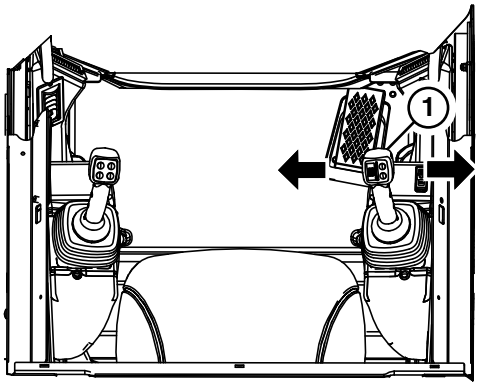

TX1126821 —UN—18DEC12

Right Joystick

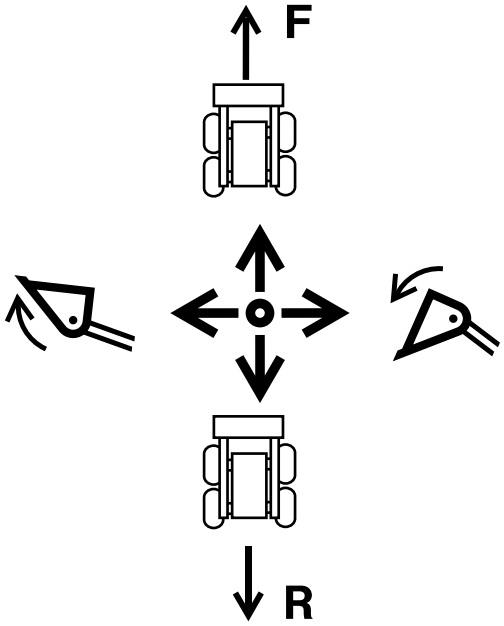

TX1067124 —UN—04NOV09

Right Joystick Operation—H Pattern

JS90457,00001DC -19-13FEB18-2/2

Joystick Performance Package—If Equipped

Joystick performance package includes the following:

- Transmission response rate (travel and steer)—Setting can be selected for increased performance and to suit desired operator preference. For more information, see Transmission Response Rate (Travel and Steer)—If Equipped in this section.
- Switchable controls—Machine control can be switched between electrohydraulic (EH) hands only (ISO pattern) controls or EH hands only (H pattern) controls. For more information, see Switchable Controls—If Equipped in this section.
- Hydraulic response rate (boom and bucket)—Setting can be selected for increased performance and to suit desired operator preference. For more information, see Hydraulic Response Rate (Boom and Bucket)—If Equipped in this section.

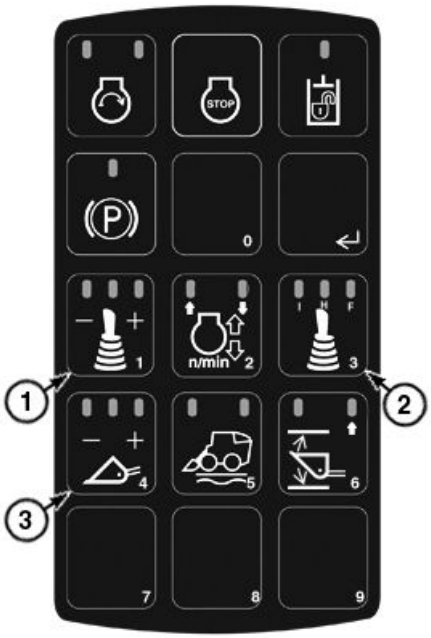

Sealed Switch Module (SSM)

TX1237259 —UN—12APR17

1— Transmission Response Switch
2— Pattern Select Switch
3— Hydraulic Response Switch

JS90457,00001DD -19-14NOV18-1/1

Transmission Response Rate (Travel and Steer)—If Equipped

For electrohydraulic (EH) machines with joystick performance package only, one of three travel and steer speed rate settings can be selected for increased performance and to suit desired operator preference.

Press transmission response switch (1) on sealed switch module (SSM) to select desired rate.

- **Precision Rate (left light-emitting diode [LED] illuminated)**—Provides reduced response to the joystick command. Speed is limited to no less than 80%.
- **Utility Rate (left and middle LEDs illuminated)**—Provides increased response to the joystick command. All functions attain 100% maximum speed at the end of joystick travel. This setting is the default setting from the factory.
- **Production Rate (all LEDs illuminated)**—Provides quickest response to the joystick command. All functions attain 100% maximum speed for each function.

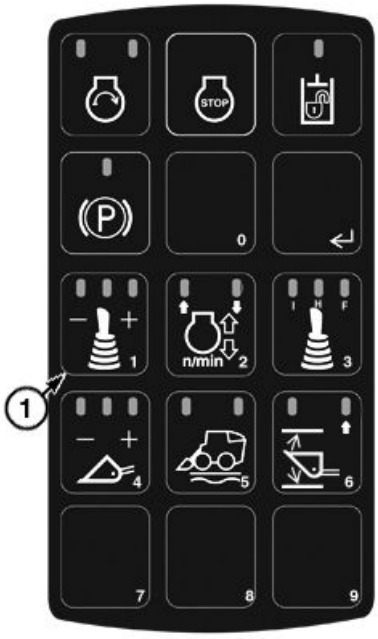

Sealed Switch Module (SSM)

TX1237254 —UN—12APR17

1— Transmission Response Switch

RE59955,000110A -19-11APR17-1/1

Switchable Controls—If Equipped

CAUTION: Avoid machine damage or personal injury from unexpected machine movement. Verify machine control functions prior to operation.

The switchable controls option allows machine control to be switched between electrohydraulic (EH) hands only (ISO pattern) controls and EH hands only (H pattern) controls.

NOTE: The active pattern will be displayed on engagement and monitor unit (EMU) at machine start-up and anytime the pattern is changed.

The pattern used prior to shutdown will be enabled upon next start-up.

Press and release pattern select switch (1) until left LED is illuminated to activate EH hands only (ISO pattern) controls.

Press and release pattern select switch until middle LED is illuminated to activate EH hands only (H pattern) controls.

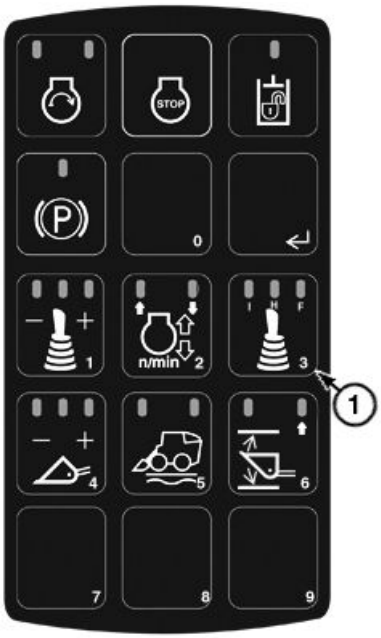

Sealed Switch Module (SSM)

TX1237257 —UN—12APR17

1— Pattern Select Switch

JS90457,00001DE -19-13FEB18-1/1

Hydraulic Response Rate (Boom and Bucket)—If Equipped

For electrohydraulic (EH) machines with joystick performance package only, one of three boom and bucket speed rate settings can be selected for increased performance and to suit desired operator preference.

Press hydraulic response switch (1) on sealed switch module (SSM) to select desired rate.

- **Precision Rate (left light-emitting diode [LED] illuminated)**—Provides reduced response to the joystick command.
- **Utility Rate (left and middle LEDs illuminated)**—Provides increased response to the joystick command. This setting is the default setting from the factory.
- **Production Rate (all LEDs illuminated)**—Provides quickest response to the joystick command.

1— Hydraulic Response Switch

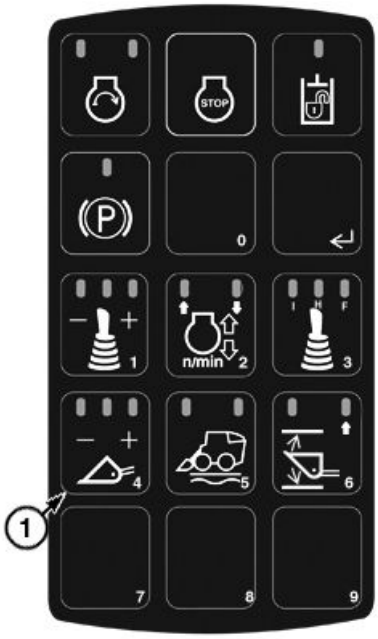

Sealed Switch Module (SSM)

TX1237255 —UN—12APR17

RE59955,000110C -19-11APR17-1/1

Creep Mode—If Equipped

NOTE: When creep mode is active, machine control pattern cannot be changed.

CAUTION: Prevent injury from unexpected machine movement. Keep bystanders clear of machine. Pressing the left joystick trigger for less than 1 second without creep mode active will activate two-speed mode (if equipped). Do not release left joystick trigger until monitor displays CREEP LIMIT indicating that creep mode is activated.

Creep mode is only available with electrohydraulic (EH) controls and is included as part of the optional joystick performance package.

Creep mode is used to limit the forward and reverse travel speeds of the machine when the joystick is at full travel.

NOTE: For wheeled machines, shifting to high speed is allowed regardless of hydraulic oil temperature. Shifting to low speed is allowed during normal operation if hydraulic oil temperature is 40°C (105°F) or greater. If hydraulic oil temperature is less than 40°C (105°F), then shifting to low speed requires machine to be stopped and park brake applied. If hydraulic oil is too cold for down shift without park brake applied, HYD TEMP TOO LOW FOR SHIFT pop-up will display on engagement and monitor unit (EMU).

There are two methods to activate creep mode:

- Press creep mode speed switch (1) in either direction.
- For (S.N. 391836—): Press and hold the left joystick trigger (2) switch for a minimum of 1 second.

The monitor alarm beeps to alert the operator that creep mode has been enabled. For two-speed machines, when the machine is in high range prior to actuation of the switch, the machine will also shift to low range when the joystick is in neutral.

Once creep mode is activated, the engagement and monitor unit (EMU) will display the speed limit setting screen. The creep mode limit will display the last saved setting.

Change the speed limit setting by pressing the upper or lower portion of creep mode speed switch.

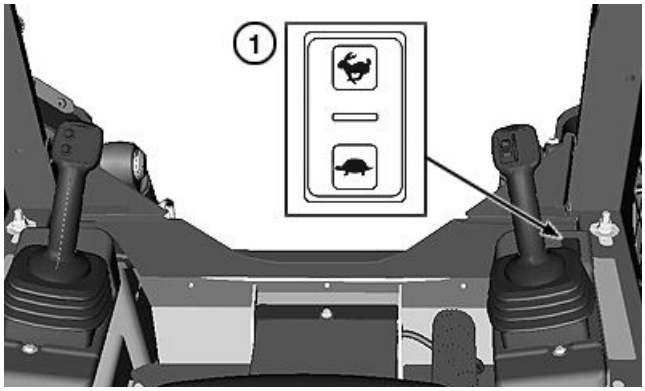

TX1205729 —UN—17NOV15

Creep Mode Speed Switch

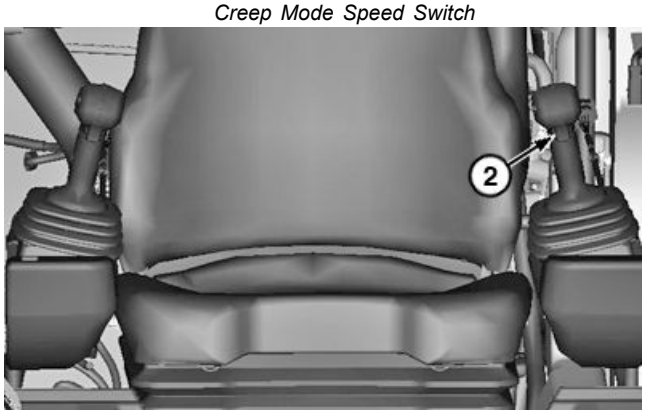

TX1303756A —UN—25SEP20

Left Joystick

1— Creep Mode Speed Switch 2— Left Joystick Trigger

Speed limit can be adjusted while the machine is moving. The setting selected will become active immediately. The display will show the percentage of allowed maximum speed in increments of 10% above 20%, and in increments of 1% below 20%. If the MENU or SELECT button is pressed, the display will return to the previous menu display and the operator is allowed to navigate the display as normal. The operator can return to the speed limit setting screen by either cycling creep mode off and then on again or by navigating the menus and selecting creep mode.

When machine is in creep mode, the creep mode indicator (snail) will illuminate on EMU.

To deactivate creep mode and return to travel speed, press the left joystick trigger switch.

CN93077,0000702 -19-30DEC23-1/1

Attachment Mounting System—Quik-Tatch™

Manual Quik-Tatch™

CAUTION: Prevent possible injury from unexpected machine movement. Be careful not to pinch hands between latch handle and step or latch handle and attachment. DO NOT try to latch or unlatch handles from operator's station.

Installing an attachment:

1. Park machine on level surface.
2. Exit machine.
3. Lift latch handles (1) up to unlatched position. Be sure latch handles are all the way up so lock pins are fully retracted.
4. Enter machine, fasten seat belt, and lower interlocking seat bar. Start engine. Disengage park brake.
5. Tilt mounting plates (2) forward.
6. Drive forward. Raise boom and guide top of mounting plates under attachment mounting brackets (3).
7. Raise and roll back mounting plates. The back of attachment should rest against front of mounting plates.
8. When attachment is fully supported, lower boom until boom is resting on boom stops.
9. Roll attachment out, stopping with bottom edge of attachment about 50 mm (2 in) from ground.
10. Engage park brake, stop engine, raise interlocking seat bar, unfasten seat belt, and exit machine.
11. Push the two latch handles down to lock attachment to Quik-Tatch™.
12. Enter machine, fasten seat belt, and lower interlocking seat bar.
13. Start engine and disengage park brake.
14. Activate boom cylinders to raise attachment and extend bucket cylinders to tilt attachment at a slight downward angle so that bottom of Quik-Tatch™ is visible.

CAUTION: Prevent possible crushing injury from falling attachment. Be sure pins and latch handles are secure before operating boom and bucket.

If attachment is not securely latched, follow the removal procedure, and then repeat installation procedure.

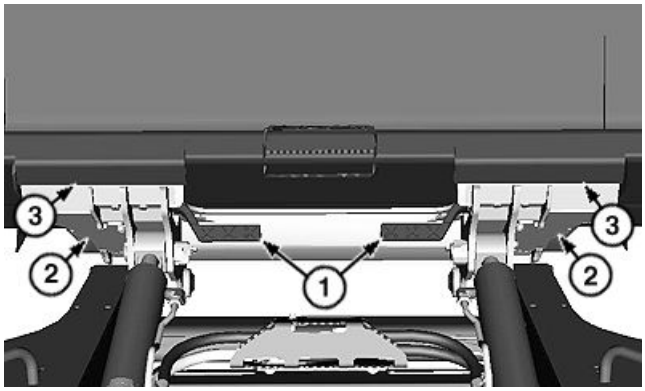

TX1205743 —UN—17NOV15

Manual Quik-Tatch™

1— Latch Handle (2 used)
2— Mounting Plate (2 used)
3— Mounting Bracket (2 used)

15. Visually inspect attachment mechanism to verify that pins are fully engaged in slots on back of attachment.

IMPORTANT: Avoid excessive pin wear. Keep the pin area clear of dirt and debris. If the pin will not fully engage or if wear is detected, see an authorized John Deere dealer.

16. Connect attachment hydraulic hoses and electrical connections to machine if equipped. See Connecting and Disconnecting Auxiliary Hydraulics in this section.

Removing the attachment:

1. Park machine on level surface.

CAUTION: Prevent possible crushing injury from falling attachment. Be sure attachment is on the ground before continuing.

2. Lower boom until attachment is securely resting on ground.
3. Disconnect hydraulic hoses from couplers if needed.
4. Pull latch handles up to unlatched position to release pins from lower attachment tabs. Be sure latch handles are fully raised.
5. Enter machine, fasten seat belt, and lower interlocking seat bar.
6. Start engine and disengage park brake.
7. Tilt mounting plate forward and back machine away from attachment at the same time.

Quik-Tatch is a trademark of Deere & Company

Continued on next page

CN93077,0000705 -19-01MAY17-1/3

Power Quik-Tatch™

Installing an attachment:

1. Park machine on level surface.
2. Lower boom until boom is resting on boom stops.
3. Disengage park brake.

NOTE: The switch will automatically return to center position when released. The lock pins will stop at the position they are in at the time the switch is released.

4. Press and hold lower half of Quik-Tatch™ switch (1) to retract lock pins. Red indicator should be visible in indicator windows (2).
5. Tilt mounting plates (3) forward.
6. Drive forward and raise boom. Guide top of mounting plates under attachment mounting brackets.
7. Raise and rollback mounting plates. Back of attachment should rest against front of mounting plates.
8. Lower boom until boom is resting on boom stops when attachment is fully supported.
9. Roll attachment out. Stop with bottom edge of attachment 50 mm (2 in) from ground.
10. Press and hold upper half of Quik-Tatch™ switch to engage lock pins. Red indicator should not be visible in indicator window.
11. Activate lift cylinders to raise attachment and extend bucket cylinders to tilt attachment at a slight downward angle so that the bottom of the Quik-Tatch™ is visible.

CAUTION: Prevent possible crushing injury from falling attachment. Be sure pins are engaged before operating boom and bucket. Red indicator should not be visible in the indicator window.

If attachment is not securely latched, follow the removal procedure and then repeat installation procedure.

12. Visually inspect attachment mechanism to verify that pins are fully engaged in slots on back of attachment.
13. Connect hydraulic hoses to couplers if needed. See Connecting and Disconnecting Auxiliary Hydraulics in this section.

Removing the attachment:

1. Park machine on level surface.

TX1209549 —UN—22JAN16

Control Panel

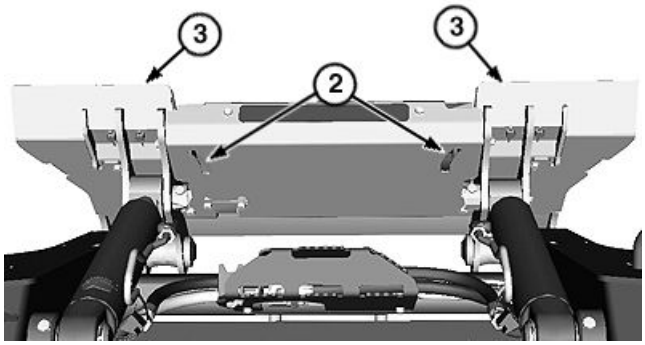

TX1205751 —UN—17NOV15

Power Quik-Tatch™

1— Quik-Tatch™ Switch
2— Indicator Window (2 used)
3— Mounting Plate (2 used)

CAUTION: Prevent possible crushing injury from falling attachment. Be sure attachment is on the ground before continuing.

2. Lower boom until attachment is securely resting on ground.
3. If attachment does not have hydraulic hoses connected to couplers, proceed to next step.

   If attachment does have hydraulic hoses connected to couplers:

   - Engage park brake and stop engine.
   - Raise interlocking seat bar and unfasten seat belt.
   - Disconnect hydraulic hoses from couplers.
   - Enter machine, fasten seat belt, and lower interlocking seat bar.
   - Start engine and disengage park brake.
4. Press and hold lower half of Quik-Tatch™ switch to retract lock pins. Red indicator should be visible in indicator window.
5. Tilt mounting plates forward and back machine away from attachment at the same time.

Quik-Tatch is a trademark of Deere & Company

Continued on next page

CN93077,0000705 -19-01MAY17-2/3

Auto-Idle

Auto-idle can be enabled or disabled based on a selection in the engagement and monitor unit (EMU) operator menus. See Auto-Idle (EMU). (Section 2-3.)

Auto-Idle

Auto-idle automatically commands the engine to idle speed if the engine is left running at a speed greater than slow idle with no activation of travel, hydraulic, or auxiliary hydraulic functions for more than 5 seconds.

NOTE: AUTO-IDLE will be displayed on the EMU when machine is in auto-idle mode.

Auto-idle will become **active** if ALL of the following are true:

1. Engine is running.
2. When more than 30 seconds have passed since engine was started.
3. Auto-idle is enabled in the EMU.
4. Operator present in seat with interlocking seat bar down.
5. Park brake is released.
6. Engine speed control dial is more than 5% above slow idle.
7. Engine speed control pedal (if equipped) is not depressed.
8. Engine coolant temperature is greater than 25°C (77°F).
9. Auxiliary hydraulics are not enabled.
10. Left and right joysticks are in center position.
11. Foot pedals (if equipped) are in center position.
12. No travel, boom, or bucket functions have been activated.
13. Creep mode is not enabled.
14. Cab door (if equipped) is closed.
15. Transmission response switch is not enabled.
16. Calibration mode is not enabled (see an authorized John Deere dealer).
17. Items 1—16 have been true for longer than 5 seconds.

NOTE: Auto-idle is also deactivated if engine is shut off.

To deactivate auto-idle, do one of the following:

- Adjust engine speed control dial by more than 5%.
- If engine speed control dial is not at maximum, depress engine speed control pedal by more than 5%.
- Move either left or right joystick out of neutral position.
- Move foot pedals (if equipped) out of neutral position.
- Actuate auxiliary proportional switch.
- Enable creep mode.
- Disable auto-idle in the EMU.

Limited Auto-Idle

NOTE: When the creep mode is active, the limted auto-idle function will not active.

Limited auto-idle automatically commands the engine to idle speed if the engine is left running at a speed greater than slow idle with no activation of travel, hydraulic, or auxiliary hydraulic functions for more than 60 seconds.

NOTE: AUTO-IDLE will be displayed on the EMU when machine is in limited auto-idle mode.

Limited auto-idle will become **active** if ALL of the following are true:

1. Engine is running.
2. When more than 30 seconds have passed since engine was started.
3. Operator is out of the seat.
4. Engine speed control dial is more than 5% above idle.
5. Engine speed control pedal (if equipped) is not depressed.
6. Engine coolant temperature is greater than 25°C (77°F).
7. Auxiliary hydraulics are not enabled.
8. Left and right joysticks are in center position.
9. Foot pedals (if equipped) are in center position.
10. Items 1—9 have been true for longer than 60 seconds.

NOTE: Limited auto-idle is also deactivated if engine is shut off.

To deactivate limited auto-idle, do one of the following:

- Move either left or right joystick out of neutral position.
- Move foot pedals (if equipped) out of neutral position.
- Actuate auxiliary proportional switch.
- Adjust engine speed control dial by more than 5%.
- If engine speed control dial is not at maximum, depress engine speed control pedal by more than 5%.

DB84312,00001CC -19-10JAN23-1/1

Connecting and Disconnecting Auxiliary Hydraulics

CAUTION: To avoid injury from escaping fluid under pressure, stop engine and relieve the pressure in the system before disconnecting or connecting hydraulic or other lines. Tighten all connections before applying pressure.

If auxiliary hydraulic connection or disconnection cannot be made, relieve hydraulic system pressure. See Hydraulic System Pressure Release—EH Controls in this section.

Connecting Auxiliary Hydraulics

Machine comes equipped with connect under pressure (CUP) couplers to allow for easier attachment connection.

Male and female auxiliary port couplers (13 and 15) move in and out of housing (16), allowing system pressure to bleed back to hydraulic tank through auxiliary case drain port (14).

Press and hold male and female auxiliary port couplers up to 10 seconds to relieve system pressure.

Connect attachment to male and female auxiliary port couplers.

Attachment auxiliary case drain port is only used when required by attachment.

If attachment is equipped with an electrical connector, attach electrical connector to 3-pin electrical connector (11) or 14-pin electrical connector (12).

See attachment operator's manual for additional connection information.

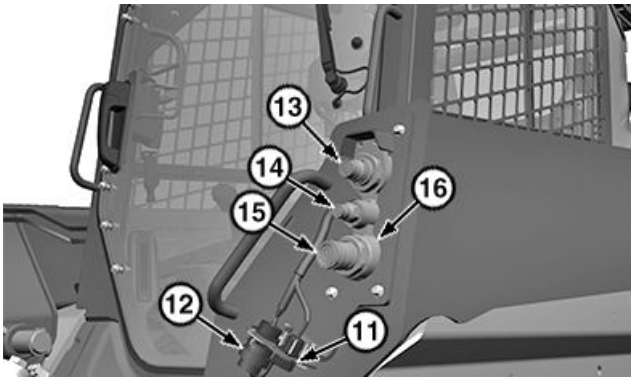

TX1252346A —UN—13FEB18

Auxiliary Hydraulic (performance package shown)

11— 3-Pin Electrical Connector (if equipped)
12— 14-Pin Electrical Connector (if equipped)
13— Male Auxiliary Port Coupler
14— Auxiliary Case Drain Port
15— Female Auxiliary Port Coupler
16— Housing

Disconnecting Auxiliary Hydraulics

Male and female auxiliary port couplers move in and out of housing, allowing system pressure to bleed back to hydraulic tank through auxiliary case drain port.

Press and hold male and female auxiliary port couplers up to 10 seconds to relieve system pressure.

Disconnect male and female auxiliary port couplers.

Disconnect electrical connector (if equipped).

JS90457,0000249 -19-13FEB18-1/1

Operating Auxiliary Hydraulics

CAUTION: Avoid possible injury from unintended machine movement. Auxiliary hydraulic functions change when dozer mode is enabled. Ensure dozer mode is disabled before operating auxiliary hydraulics.

For more information on dozer mode, see Dozer Mode—If equipped in this section.

IMPORTANT: Avoid attachment damage. Only use high flow switch (10) with high flow attachments.

The auxiliary hydraulic interlock function ensures operator is present in machine and cab door is closed before operating auxiliary hydraulics.

Use switches on left and right joysticks (1 and 2) to operate auxiliary hydraulic functions.

Roll auxiliary proportional switch (4) forward or backward to vary hydraulic flow rate and direction, depending on desired attachment function. Releasing the auxiliary proportional switch stops all auxiliary hydraulic flow.

To set continuous auxiliary flow, press and release the auxiliary flow set switch (3) while the proportional switch is actuated in the desired direction. This will set the auxiliary hydraulics to run at full flow in the direction selected. Continuous auxiliary hydraulic flow will continue without pressing the auxiliary proportional switch.

If continuous flow is active and the auxiliary proportional switch is moved in either direction or the flow set switch is pressed, continuous flow will be cancelled and proportional auxiliary hydraulic flow will resume.

If attachment is equipped with 3-pin connector, switches (5 and 6) are used to operate attachment. If attachment is equipped with 14-pin connector, switches (5—9) are used to operate attachment. Consult attachment operator's manual for attachment functions controlled by these switches.

If attachment is equipped with 5-pin connector, the 5-pin connector is used for additional attachment sensor communications.

Auxiliary Hydraulic Override

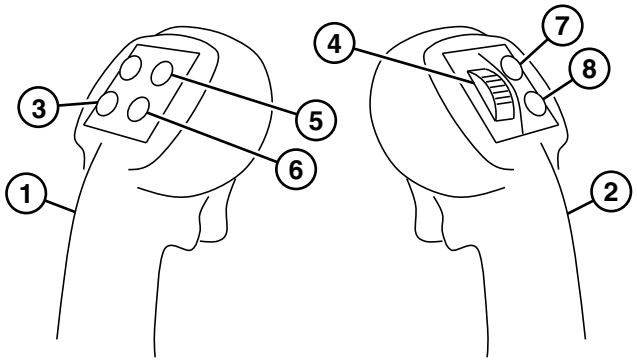

TX1067175 —UN—04NOV09

Auxiliary Hydraulic Controls

TX1125010 —UN—13DEC12

Control Panel—Keyless Start

1— Left Joystick
2— Right Joystick
3— Auxiliary Flow Set Switch
4— Auxiliary Proportional Switch
5— Auxiliary Third Function A Switch
6— Auxiliary Third Function B Switch
7— Auxiliary Second Function A Switch
8— Auxiliary Second Function B Switch
9— Auxiliary Fourth Function Switch
10— High Flow Switch (if equipped)

Auxiliary hydraulic override allows operator to exit machine with auxiliary hydraulics enabled. Auxiliary hydraulic override can be enabled through engagement and monitor unit (EMU), allowing auxiliary hydraulic functions to be run without being in the seat. See Auxiliary Hydraulic Override—If Equipped (EMU). (Section 2-3.)

DB84312,00001CD -19-23SEP20-1/1

Hydraulic System Pressure Release—EH Controls

CAUTION: Prevent possible injury from unexpected boom or bucket movement when equipped with ride control. Ride control accumulator energy must be discharged when working on hydraulic components. Turn switched power on. Press ride control switch ON and move joystick or pedal to float position.

To avoid injury from escaping fluid under pressure, stop engine and relieve the pressure in the system before disconnecting or connecting hydraulic or other lines. Tighten all connections before applying pressure.

Use electrohydraulic (EH) controls for this procedure to relieve trapped hydraulic system pressure before performing hydraulic system repairs or tests.

Key Start

1. Sit in seat. Close cab door, if equipped.
2. Lower interlocking seat bar.
3. Turn key to RUN position. Do not start engine.
4. Press park brake switch to middle position to engage hydraulic functions.

CAUTION: To prevent crushing injury, only perform hydraulic system pressure release with boom down or boom up with boom lock engaged. To lower boom manually, see Boom Release in this section.

5. Cycle both the boom and bucket functions.
6. Stop cycling functions once pressure has been released.
7. Cycle auxiliary hydraulic functions.
8. Stop cycling auxiliary hydraulic functions once pressure has been released.
9. Engage park brake and turn key switch to OFF.

Keyless Start

1. Sit in seat. Close cab door, if equipped.
2. Lower interlocking seat bar.
3. Press engine start switch to turn switched power ON. Do not start engine.
4. Press hydraulic enable switch.

CAUTION: To prevent crushing injury, only perform hydraulic system pressure release with boom down or boom up with boom lock engaged. To lower boom manually, see Boom Release in this section.

5. Cycle both the boom and bucket functions.
6. Stop cycling functions once pressure has been released.
7. Cycle auxiliary hydraulic functions.
8. Stop cycling auxiliary hydraulic functions once pressure has been released.
9. Press park brake switch and engine stop switch.

CN93077,000073F -19-15DEC15-1/1

Self Leveling Hydraulics—If Equipped

If machine is equipped with self leveling option, the attachment remains in same relative position as the boom is raised.

NOTE: Self leveling is only operational during boom raise function.

Self leveling will not operate if ride control is active.

Key Start

Self Leveling Switch (If Equipped)

Press upper half of self leveling switch (1) to activate self leveling feature. Press lower half of self leveling switch to deactivate.

TX1209531 —UN—22JAN16

Self Leveling Switch (if equipped)

1— Self Leveling Switch

Continued on next page

JS90457,0000252 -19-15FEB18-1/2

Keyless Start

Press self leveling switch (1) on sealed switch module (SSM) (light-emitting diode [LED] illuminated) to turn on self leveling.

1— Self Leveling Switch

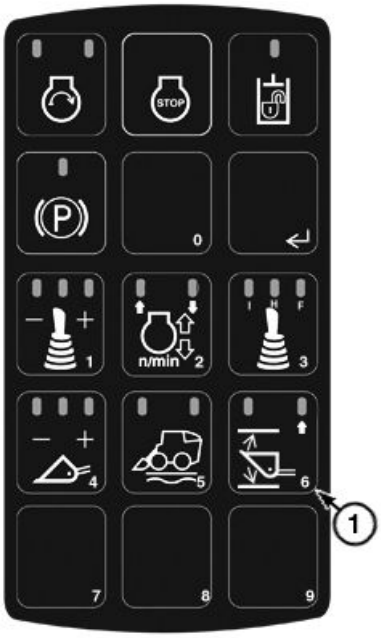

TX1237258 —UN—12APR17

Sealed Switch Module (SSM)

JS90457,0000252 -19-15FEB18-2/2

Ride Control—If Equipped

CAUTION: Prevent possible injury from unexpected boom or bucket movement when equipped with ride control. Ride control accumulator energy must be discharged when working on hydraulic components. Turn switched power on. Press ride control switch ON and move joystick/control lever or pedal to float position.

Ride control improves machine ride when traveling over rough terrain. Ride control also reduces material spillage from the bucket by cushioning boom movement.

1. Press ride control switch (1) on sealed switch module (SSM) (left light-emitting diode [LED] illuminated) to turn on ride control.
2. Activate ride control by pressing right joystick trigger (both LEDs illuminated). If activated, self leveling will go to standby.
3. Press right joystick trigger again (left LED illuminated) to deactivate ride control.
4. Press ride control switch on SSM (no LEDs illuminated) to turn off ride control.

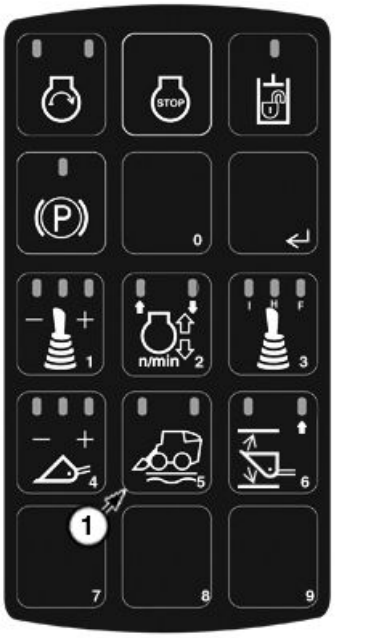

TX1237298 —UN—12APR17

Sealed Switch Module (SSM)

1— Ride Control Switch

RE59955,0001111 -19-13SEP17-1/1

High Flow Hydraulics—If Equipped

TX1124969 —UN—19NOV12

Control Panel

1— High Flow Switch

IMPORTANT: Avoid attachment damage. Only use high flow switch (1) with high flow attachments.

If machine is equipped with high flow hydraulics and attachment requires a high hydraulic flow rate to operate, connect attachment to high flow male and female couplers. See Connecting and Disconnecting Auxiliary Hydraulics in this section.

Push upper half of high flow switch (1) momentarily to turn on and activate high flow option. Amber hydraulic high flow icon will appear on engagement and monitor unit (EMU). Push upper half of switch again to turn high flow option off.

JK47244,00001C1 -19-03JAN13-1/1

Two-Speed Operation—If Equipped

Two-speed operation allows operator to travel in low or high range.

NOTE: If engine is shutdown with high range activated, machine will default back to low range when engine is started. Two-speed switch (1) must be pressed to enable high range.

Press two-speed switch (1) on left joystick/control lever to activate or deactivate two-speed option.

For wheeled machines, shifting to high speed is allowed regardless of hydraulic oil temperature. Shifting to low speed is allowed during normal operation if hydraulic oil temperature is 40°C (105°F) or greater. If hydraulic oil temperature is less than 40°C (105°F), then shifting to low speed requires machine to be stopped and park brake applied. If hydraulic oil is too cold for down shift without park brake applied, HYD TEMP TOO LOW FOR SHIFT pop-up will display on EMU.

1— Two-Speed Switch

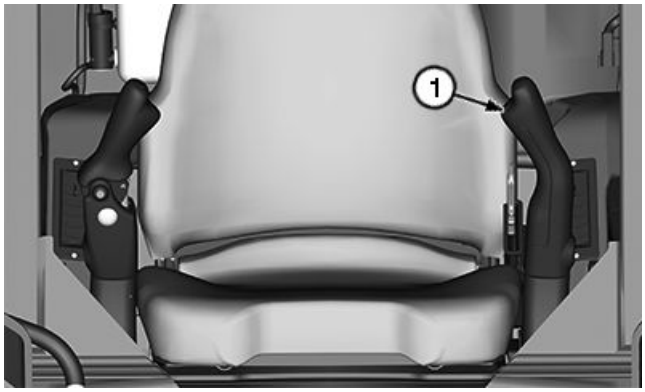

TX1285085A —UN—11SEP19

Two-Speed Switch (manual machines) (S.N. —366356)

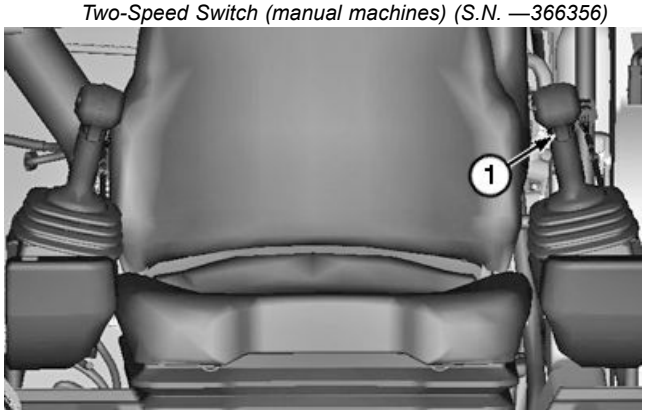

TX1144060 —UN—16SEP13

Two-Speed Switch (electrohydraulic [EH] machines)

DB84312,00001BB -19-28JUL21-1/1

Loading Machine on a Trailer

IMPORTANT: Avoid damage. Never put chains across bucket cylinders. Damage to cylinders may occur.

Do not tow machine or hydrostatic system damage may occur.

NOTE: Use extra caution in wet or muddy conditions.

1. Use a heavy-duty trailer to transport machine.
2. Park trailer on firm, level ground.
3. Keep trailer bed clean.
4. Place chock blocks against the trailer wheels.
5. Back machine onto trailer, keeping boom and attachment low.
6. The center line of machine should be over the center line of trailer.
7. Before exiting machine, lower attachment to trailer bed, engage park brake, and shut engine OFF.
8. Fasten machine securely to trailer.
9. Understand and follow all local regulations when transporting machine on public roads.

1— Front Tiedown
2— Rear Tiedown (2 used)
3— Boom Tiedown (2 used)

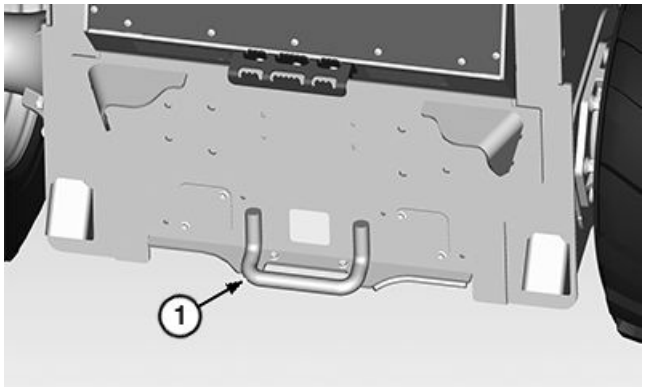

TX1215561 —UN—03JUN16

Front Tiedown

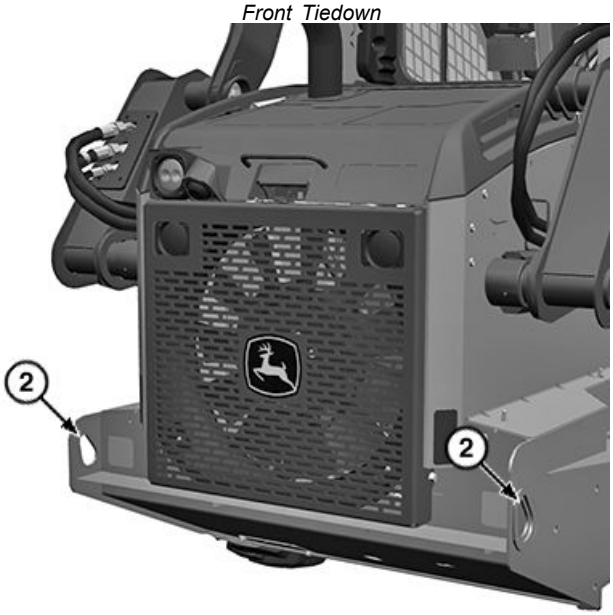

TX1249021A —UN—20DEC17

Rear Tiedowns

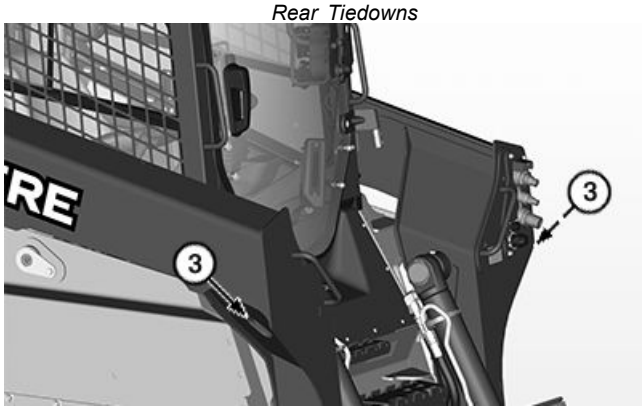

TX1216822 —UN—16JUN16

Boom Tiedowns

JS90457,0000217 -19-04JAN18-1/1

Engagement and Monitor Unit (EMU)

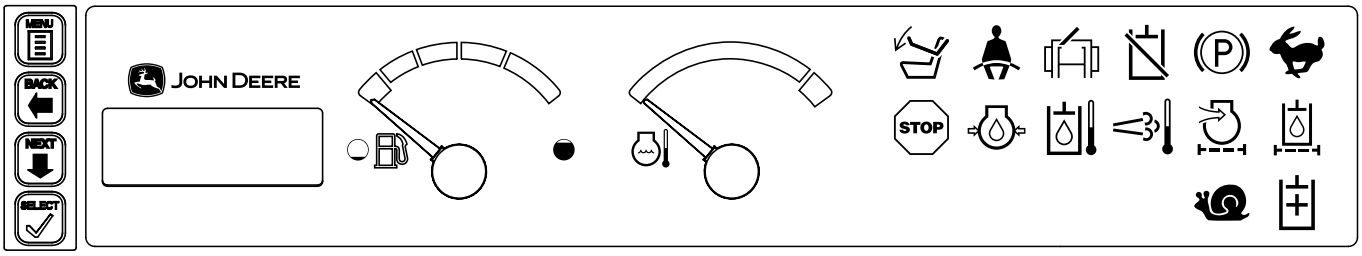

TX1204328 —UN—30OCT15

TX1204328

Engagement and Monitor Unit (EMU)

Wake-Up Mode

Engagement and monitor unit (EMU) wake-up mode occurs when SELECT button is pressed and held when switch power is OFF and seat switch is not activated.

Display unit performs as follows:

1. Backlight remains on.
2. All icons remain off and display window will be cleared.
3. Upper line of display will show battery voltage with lower line showing machine hours.

Normal Switch Power On

Display unit performs a display check sequence as follows:

1. Alarm sounds for approximately 2 seconds.
2. Display initially reads TMC by John Deere momentarily before showing the machine model and speeds momentarily.
3. Backlight will turn on.
4. Display monitor goes into bulb check mode. All lights on display monitor will illuminate.
5. All gauges position gauge needle to center position before returning to normal runtime position.
6. If security system has been enabled by owner, operator logon screen will appear on display unit. Operator must enter valid personal identification number (PIN).

CN93077,00006BC -19-26APR17-1/1

Main Menu (EMU)

The MAIN MENU displays submenus that can be selected to view diagnostic information or change various operating characteristics of machine or display unit.

NOTE: Translations shown on display may be abbreviated.

Press MENU button to access MAIN MENU.

Navigate menu using BACK, NEXT, and SELECT buttons on engagement and monitor unit (EMU).

1— Display Window

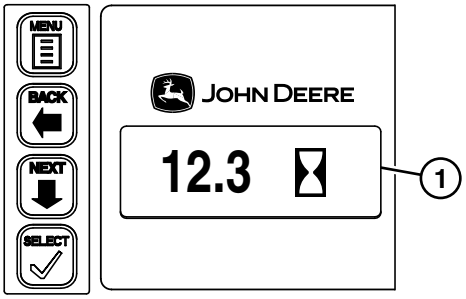

TX1144063 —UN—16SEP13

Engagement and Monitor Unit (EMU)

MAIN MENU Items	
Menu Items	Description
AUX HYD OVERRD	If equipped, allows operator to exit machine with auxiliary hydraulic functions engaged.
EXHAUST FILTER	Displays soot level and allows operator to select exhaust filter cleaning options.
COURTESY LIGHTING	Allows operator to set amount of time the front cab lights and the taillights remain illuminated after machine is turned off.
FAN REV INTERVAL	Allows operator to select length of time reversing fan operates.
CODES	Allows operator to view active and stored diagnostic trouble codes (DTCs).
MONITOR	Allows operator to select language and units format for the monitor.
JOB TIMER	Allows operator to record time for a specific job.
AUTO IDLE	Allows operator to enable or disable auto-idle feature.
ANTITHEFT	*NOTE: ANTITHEFT menu is initially programmed as inactive (disabled). To program the ANTITHEFT menu as active (enabled), contact an authorized John Deere dealer.* If equipped, provides a basic level of machine theft protection.
MANUAL TRACKING	If equipped, allows operator to adjust higher speed tracking so machine will go in straighter path when joystick is not commanding a steer.
SOFTWARE DELIVERY	If equipped, allows for software updates to be downloaded remotely via JDLink™ cellular connection.

JDLink is a trademark of Deere & Company

DB84312,000023A -19-23JUL18-1/1

Auxiliary Hydraulic Override—If Equipped (EMU)

The auxiliary hydraulics override feature monitors machine conditions, assist operator in machine setup for auxiliary hydraulic override, and provide the operator the ability to control auxiliary hydraulics from outside of the machine once all criteria are met.

To enable the auxiliary hydraulics override, the operator must be present in the operator's station with hydraulics enabled and then activate the override through the EMU display. Exit the machine within 15 seconds, after activating the override through the display. The machine provides continuous flow without the operator in the seat/cab if the over-ride criteria was met with the operator in the seat.

To enable auxiliary hydraulic override, navigate the menu on the display and turn it on. Push the right joystick out of neutral (command the hydraulic flow through the auxiliary) to start the auxiliary flow before leaving the machine, and press the “Aux Set” button on the left joystick to lock it ON. Once the flow is now ON, the operator can now get out of the machine and auxiliary hydraulic flow would continue.

The AUXILIARY HYDRAULIC OVERRIDE menu allows operator to exit machine with auxiliary hydraulic override functions engaged.

Navigate through menu: **MAIN MENU >> AUX HYD OVRRD.**

- SELECT button enables or disables auxiliary hydraulic function.
- BACK button returns to previous menu.

CN93077,00006BD -19-25DEC23-1/1

Exhaust Filter (EMU)

EXHAUST FILTER menu displays the current filter soot level and provides options for filter cleaning.

Navigate through menu: **MAIN MENU >> EXHAUST FILTER**.

There are three soot levels that determine the type of filter cleaning required.

- AUTO CLEANING (if enabled) may initiate a filter cleaning automatically when soot levels are LOW or MODERATE.
- PARKED CLEANING can only be initiated when soot levels are LOW or MODERATE.

For more information on the exhaust filter, see Exhaust Filter. (Section 2-2.)

EXHAUST FILTER Menu Items

Menu Items		Submenu Items	Value	Description
1: SOOT LEVEL			• LOW • MODERATE • HIGH	Describes soot restriction level of exhaust filter which determines type of cleaning required.
2: AUTO CLEANING	>>	1: ENABLE AUTO CLEAN 2: DISABLE AUTO CLEAN		For more information, see Exhaust Filter Auto Cleaning (EMU) in this section.
3: PARKED CLEANING	>>	• ENG MUST BE RUN • CLEAN NOT NEEDED • SERVICE REQUIRED		For more information, see Exhaust Filter Parked Cleaning (EMU) in this section.

CN93077,00006C0 -19-26APR17-1/1

Exhaust Filter Auto Cleaning (EMU)

CAUTION: Servicing machine during exhaust filter auto cleaning can result in serious personal injury. Avoid exposure and skin contact with hot gases and components.

During exhaust filter auto cleaning, the engine may run at elevated idle and hot temperatures for an extended period of time. Exhaust gases and exhaust filter components may reach temperatures hot enough to burn people and ignite or melt common materials.

NOTE: Disabling exhaust filter auto cleaning is not preferred. Whenever possible, auto cleaning should be enabled to keep soot buildup to a minimum and to increase overall machine uptime.

If enabled, an exhaust filter cleaning is capable of initiating automatically when filter soot levels are LOW or MODERATE.

Auto cleaning is set to ENABLED from the factory. If operating in conditions where elevated exhaust temperatures may be unsafe, auto cleaning can be disabled. See Exhaust Filter (EMU) in this section.

For more information on exhaust filter cleaning, see Exhaust Filter. (Section 2-2.)

Set AUTO CLEANING Mode:

1. Navigate through menu: **MAIN MENU >> EXHAUST FILTER >> AUTO CLEANING**.
2. Highlight desired option and press SELECT button to activate.

CN93077,00006C1 -19-10DEC15-1/1

Exhaust Filter Parked Cleaning (EMU)

CAUTION: Servicing machine during exhaust filter parked cleaning can result in serious personal injury. Avoid exposure and skin contact with hot gases and components.

During exhaust filter parked cleaning, the engine may run at elevated idle and hot temperatures for an extended period of time. Exhaust gases and exhaust filter components may reach temperatures hot enough to burn people and ignite or melt common materials.

IMPORTANT: Avoid machine damage. Always park machine in a safe location and check for adequate fuel level before beginning exhaust filter parked cleaning.

IMPORTANT: Avoid machine damage. Engine cover must be closed during exhaust filter cleaning.

PARKED CLEANING allows operator to manually initiate an exhaust filter cleaning. Certain conditions must be met before a parked cleaning will proceed, display monitor will warn operator of these conditions if not met. Once a filter cleaning cycle is started a status bar and percentage complete is displayed.

For more information on exhaust filter cleaning, see Exhaust Filter. (Section 2-2.)

Initiate PARKED CLEANING:

1. Navigate through menu: **MAIN MENU >> EXHAUST FILTER >> PARKED CLEANING**.

NOTE: PARKED CLEANING can only be performed when filter soot levels are LOW or MODERATE.

2. View FILTER SOOT LEVEL in menu to verify filter soot levels are appropriate for filter cleaning.
3. Select PARKED CLEANING from menu.
4. Display monitor prompts operator if machine shutdown is desired after cleaning.
5. The following conditions must be met before exhaust filter cleaning proceeds:
   - Park brake engaged.
   - Engine speed at slow idle.
6. Machine will prepare exhaust filter for cleaning then proceed with cleaning cycle.

   If necessary, an in process exhaust filter cleaning may be canceled by releasing park brake, shifting to forward or reverse, or increasing engine speed but is not suggested.

   If machine detects any of the following, exhaust filter cleaning will abort:

   - LOW FUEL SELECT GO.
   - LOW FUEL BACK STOP.
     SELECT requests parked cleaning.
     BACK cancels parked cleaning.

CN93077,00006C2 -19-06DEC18-1/1

Courtesy Lighting (EMU)

The COURTESY LIGHTING menu allows operator to set amount of time front cab lights and the taillights remain illuminated when the machine is turned off and the engine is not running.

Navigate through menu: **MAIN MENU >> COURTESY LIGHTING**.

COURTESY LIGHTING Menu Items			
Menu Items		Value	Description
COURTESY LIGHTING	>>	• OFF • 30 SEC • 45 SEC • 60 SEC • 90 SEC	Current courtesy lighting delay off time displays. Pressing NEXT scrolls through the list. As the operator scrolls through the list, the monitor sets the delay time when the menu is exited.

Press SELECT or MENU button to return to MAIN MENU.

CN93077,00006C3 -19-20NOV15-1/1

Fan Reverse Interval (EMU)

The FAN REV INTERVAL menu allows operator to select the period of time between fan reversal operations.

Navigate through menu: **MAIN MENU >> FAN REV INTERVAL**.

FAN REVERSE INTERVAL Menu Items			
Menu Items		Value	Description
FAN REV INTERVAL	>>	• 10 MIN • 20 MIN • 30 MIN • 40 MIN • 60 MIN • 90 MIN	Current fan reverse interval time displays. Pressing NEXT scrolls through the list. As the operator scrolls through the list, the monitor sets the operating time when the menu is exited.

Press SELECT or MENU button to return to MAIN MENU.

JB92884,0000101 -19-26AUG21-1/1

Codes (EMU)

The CODES menu provides the capability to select and display active and stored diagnostics trouble codes (DTCs) and information about the DTC.

Navigate through menu: **MAIN MENU >> CODES**.

CODES Menu Items			
Menu Items		Submenu Items	Description
ACTIVE CODES	>>	• Source control unit detecting fault (example: EMU, ECU, VCU) • Suspect parameter number (SPN) • Failure mode indicator (FMI) • Text description of DTC	Provides the capability to display the latest DTCs that are currently active and stored on the machine. As each active DTC is resolved or fixed, the code is removed from the active code list and added to the stored code list. Each DTC is saved in order it occurred. The listed information is displayed for each code.
STORED CODES			

CN93077,00006C5 -19-04NOV15-1/1

Monitor (EMU)

Navigate through menu: **MAIN MENU >> MONITOR**.

The MONITOR menu allows operator to choose language and units format for their monitor.

MONITOR Menu Items		
Menu Items		Submenu Items
UNITS	>>	ENGLISH METRIC
LANGUAGE		ENGLISH SPANISH FRENCH RUSSIAN PORTUGUESE

CN93077,00006C6 -19-04NOV15-1/1

Job Timer (EMU)

Navigate through menu: **MAIN MENU >> JOB TIMER**.

The JOB TIMER menu allows operator to record time for a specific job.

JOB TIMER Menu Items		
Menu Items		Submenu Items
RESET TIMER	>>	Resets the timer. Timer rolls over to 0.1 after 999.9 operating hours have been reached. Job timer shall continue to run even if the job display is hidden.

CN93077,00006C7 -19-04NOV15-1/1

Auto-Idle (EMU)

The AUTO IDLE menu allows operator to enable or disable auto-idle functions.

Navigate through menu: **MAIN MENU >> AUTO IDLE**.

- SELECT button enables or disables auto-idle.
- BACK button returns to previous menu.

CN93077,00006C8 -19-20NOV15-1/1

Anti-Theft—If Equipped (EMU)

The ANTITHEFT menu allows owner to enable/disable security as well as remove, add, and modify operator PINs and security levels. Owner can also set the time interval allowed for lock mode after the machine is shut off. When enabled, the security feature is designed to impede theft or unauthorized use of the machine by preventing the engine from starting until the operator correctly enters a valid security code.

NOTE: ANTITHEFT menu is initially programmed as inactive (disabled). To program the ANTITHEFT menu as active (enabled), contact an authorized John Deere dealer.

Navigate through menu: **MAIN MENU >> ANTITHEFT**.

Enter OWNER PIN using one of the following methods:

- Using numeric keypad (2) on sealed switch module (SSM), then press enter key (1).
- Using engagement and monitor unit (EMU) buttons:
  a. Press UP or DOWN button to start process of entering PIN.
  b. Press UP button to increment number shown. If pressed when “9” is shown, display will wrap around to “0”.
  c. Press DOWN button to decrement number shown. If pressed when “0” is shown, display will wrap around to “9”.
  d. Press SELECT button to store current digit.
  e. Continue entering remaining digits of PIN.
  f. When PIN is correctly displayed, press BACK button to enter PIN and activate ANTITHEFT menu.

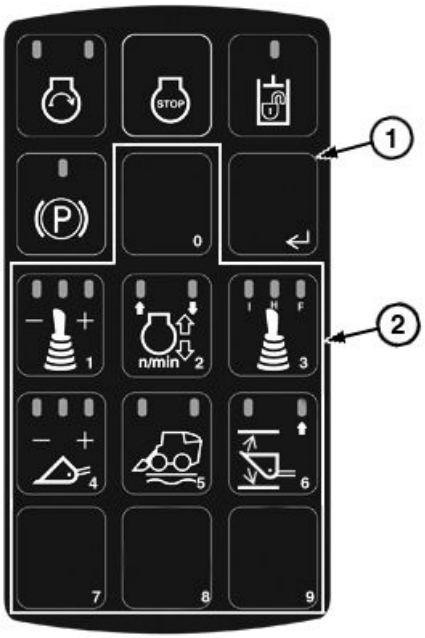

Key Pad

1— Enter Key **2— Numeric Keypad**

TX1237256 —UN—12APR17

ANTI-THEFT Menu Items					
Menu Items		Submenu Items		Submenu Items	Description
CHANGE CODES	>>	• OPERATOR 1 CODE • OPERATOR 2 CODE • OPERATOR 3 CODE • OPERATOR 4 CODE • OPERATOR 5 CODE • OWNER CODE • RESET ALL CODES			Operator codes can be from 3 or 5 numeric characters in length. Leading zeros are recognized. For example, 001 or 002 are each valid and unique operator codes. Operator codes can only be added or deleted by the owner.
LOCK MODE	>>	Enter owner code.	>>	• TURN ATS OFF • PROMPT TO LOCK • LOCK IN 5 MIN • LOCK IN 60 MIN	Allows owner to turn anti-theft system off, set a prompt to lock or auto lock anti-theft, or set anti-theft to lock in 5 min or 60 min.
NUMBER OF DIGITS	>>	Enter owner code.	>>	• INVALID OWNER CODE • SELECT TO ENABLE 3-DIGIT CODES • SELECT TO ENABLE 5-DIGIT CODES	Allows owner to set number of characters for operator codes.

RE59955,000110D -19-20JUN18-1/1

Manual Tracking—If Equipped (EH Only) (EMU)

The MANUAL TRACKING menu (EH machines only) allows for the fine adjustment of higher speed tracking so the machine travels in a straighter path when the travel function is not commanding a steer.

Using manual tracking adjustment (MTA) can help compensate for machine variations, such as differences in tire size from side-to-side or uneven tire inflation, beyond what can be done using hydrostatic system calibration.

Stored MTA setting is applied to both forward and reverse travel.

Navigate through menu: **MAIN MENU >> MANUAL TRACKING**.

1. Change MTA setting as needed. Press NEXT button to increment MTA setting to right. Press BACK button to increment the MTA setting to the left.

   Possible MTA setting values are 0—100 for both right and left.

2. Press SELECT button to save the MTA setting and return to the normal runtime display.
3. Drive machine to verify manual tracking adjustment. Repeat procedure as necessary. If maximum right or left MTA setting is reached and machine still mistracks, see an authorized John Deere dealer.

MANUAL TRACKING Menu Items

Menu Items		Description
BACK TO GO LEFT NEXT TO GO RIGHT	>>	Engagement monitor unit (EMU) displays whatever is broadcast for manual tracking adjustment (MTA) value from the hydraulic control unit (HCU). The HCU responds to BACK and NEXT buttons of the EMU and update the MTA value accordingly. Each time NEXT or BACK is pressed, the HCU increments the MTA by one to the right or left, respectively. Maximum value of 100, right or left. When MTA value is to the right, an arrow pointing right is displayed above the MTA value. When MTA value is to the left, an arrow pointing left is displayed above the MTA value.

CN93077,00006D6 -19-26AUG21-1/1

Owner Controls

NOTE: OWNER CONTROLS is only available for machines equipped with electrohydraulic (EH) controls, 2-speed, and anti-theft options enabled.

The OWNER CONTROLS menu allows owner to enable/disable 2-speed functionality for the default operator plus five additional operators. When 2-speed is disabled and operator attempts to shift into 2-speed, engagement and monitor unit (EMU) displays “FUNCTION LOCKED OUT VIA OWNER CODE” for 2 seconds before returning to last screen.

Navigate through menu: **MAIN MENU >> OWNER CONTROLS**.

Enter OWNER CODE using one of the following methods:

- Using numeric keypad on sealed switch module (SSM), then press enter key. For more information on SSM, see Sealed Switch Module (SSM). (Section 2-1.)
- Using EMU buttons:
  a. Press NEXT or BACK button to start process of entering PIN.
  b. Press NEXT button to increment number shown. If pressed when “9” is shown, display wraps around to “0”.
  c. Press BACK button to decrement number shown. If pressed when “0” is shown, display wraps around to “9”.
  d. Press SELECT button to store current digit.
  e. Continue entering remaining digits of CODE.
  f. Press SELECT to accept the last digit.

NOTE: If the code is incorrect, INVALID OWNER CODE appears on the monitor display.

The anti-theft security system allows three attempts to enter a valid security code. After three attempts, switched power must be cycled OFF and ON to restart the process.

The 2-speed lockout menu is now displayed and shows current lock status.

NOTE: When 0—5 is displayed in menu, 2-speed is enabled for specific operator. When X is displayed in menu, 2-speed is disabled for specific operator.

1. Press button 0—5 on sealed switch module (SSM) to toggle lock status for each operator. Display shows “LOCKING OPERATOR _” or “UNLOCKING OPERATOR _”, depending on operator button pressed and lock status.

NOTE: BACK and MENU buttons cancel changes made. BACK returns to OWNER CONTROLS menu and MENU returns to runtime screen.

2. Display shows updated 2-speed lockout menu. Press enter key or SELECT to store settings.

LD74059,00001DC -19-20OCT21-1/1

Software Delivery (EMU)

This menu allows for software updates to be downloaded remotely via JDLink™ cellular connection. Software updates are sent to machine using Service ADVISOR™ Remote (SAR). Downloads can take place with engine running and machine operating. However, software installation can only process if engine is not running. If conditions exist that will not allow the download or installation to happen, screens will appear on the monitor advising what needs to be done in order to continue. For more information, contact an authorized John Deere dealer.

1. Read Service ADVISOR™ Remote (SAR)—Software Terms and Conditions found at the beginning of this manual.

NOTE: SOFTWARE DELIVERY menu must be enabled by dealer.

2. Navigate through menu: **MAIN MENU >> SOFTWARE DELIVERY**.
3. Operator is notified of one of the following conditions:
   - Download complete. Ready to install.
   - Download completed. Stop engine.
   - Downloading.
   - Download not available.
   - Status unknown. Please check later.

NOTE: If operator chooses to reject download, dealer interaction is necessary to have rejected software downloaded at another time.

4. If new software is available, select APPROVE.
5. When download is complete, press SELECT to accept the software license agreement.
6. To proceed with software installation, the following criteria must be met:
   - Engine must be off.
   - Battery power must be at a sufficient level.
   - Park brake must be engaged.
7. Software installation will commence. Do not press stop button during installation.

JDLink is a trademark of Deere & Company
Service ADVISOR is a trademark of Deere & Company

CN93077,00006D4 -19-23NOV15-1/1

Auto-Shutdown

Machine is equipped with automatic shutdown to prevent machine damage.

Auto-shutdown becomes active when any of the following occurs:

- Hydraulic oil temperature is very high and DTC (1508.00) is active for 4 continuous minutes.
- Engine oil pressure is very low and DTC (100.01) is active for 5 continuous seconds.
- Hydrostatic oil temperature is very high and DTC (524084.00) is active for 4 continuous minutes.

Machine also monitors engine coolant temperature, but engine coolant temperature will not initiate an automatic shutdown. If the engine coolant temperature is very high and diagnostic trouble code (DTC) (110.00) is active for 5 continuous seconds, a 50% derate is applied to protect the engine. Contact an authorized John Deere dealer to resolve any DTCs.

LD74059,00001EC -19-21APR20-1/1

Undercarriage Component Identification

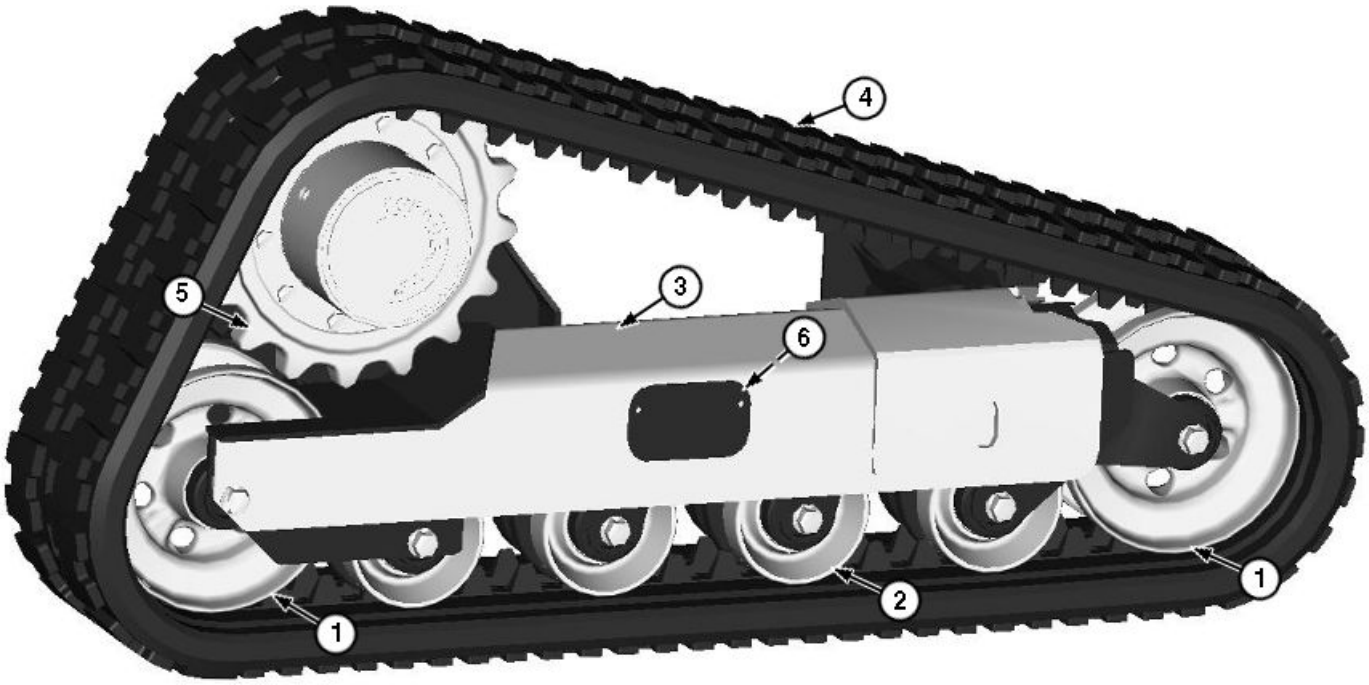

TX1139340 —UN—26JUN13

Undercarriage

1— Idler (2 per side)
2— Roller (4 per side)
3— Undercarriage Frame
4— Track
5— Drive Sprocket
6— Track Adjuster Grease Fitting

Proper machine setup and operation are important to extend the life of the track system components. By following the recommendations in this section, the operator can reduce unplanned downtime, maximize operator efficiency, and minimize operating costs.

JK47244,00002C6 -19-26JUN13-1/1

Rubber Track Structure

1— Rubber Casing
2— Guide Lug
3— Embedded Metal Insert
4— Steel Cord
5— Tread Lug

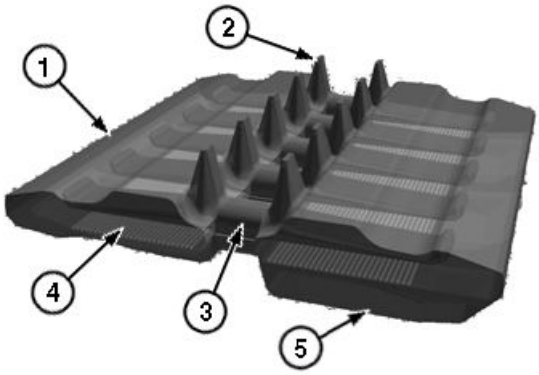

TX1021372 —UN—03MAY07

Rubber Track Structure

OUT4001,000049A -19-22SEP09-1/1

Rubber Track Usage

Damage to rubber tracks caused from operating the machine in unsuitable environments (such as rocky terrain, asphalt, concrete, metal debris, etc.) may cause premature wear of the rubber tracks and is not covered under warranty. The more care an operator takes when using rubber-tracked equipment, the longer the track will perform as expected.

AVOID:

1. Constant operation across a slope or side hill. Excessive operation across a slope or side hill will cause accelerated, uneven wear of undercarriage components. Unless the job requires otherwise, climb slopes straight up and down.
2. Making spin turns or pivot turns. Spin and pivot turns will cause accelerated wear and increase the potential for de-tracking. Operators should be trained to make wider, less aggressive turns especially on hard surfaces.
3. Traveling with one track on a slope, and the other on a flat surface. Travel with both tracks on level surfaces when possible.
4. Running over curbs or along curbs and other structures allowing tracks to rub against the structure.
5. Traveling or operating rubber track units on broken stone, jagged base stone, iron rods, scrap iron, or other recycling-type materials.
6. Continuous transporting and aggressive turning on hard surfaces such as asphalt and concrete.
7. Operating in corrosive materials (fuel, oil, salt, fertilizer, etc.). Clean the tracks and undercarriage with clear water if any substances get on the tracks.

DO:

1. Monitor track sag on a weekly basis or as needed. Certain soil conditions may require additional adjustments. Loose tracks can wander and de-track; however, be careful not to overtighten. Overtightening may cause power loss and excessive wear of undercarriage components. See Check Track Tension. (Section 3-6.)
2. Clean out the undercarriage, especially at the end of the work day in cold temperatures to prevent material from freezing and putting excessive loads on the operating systems.
3. Minimize the spinning of tracks when possible.

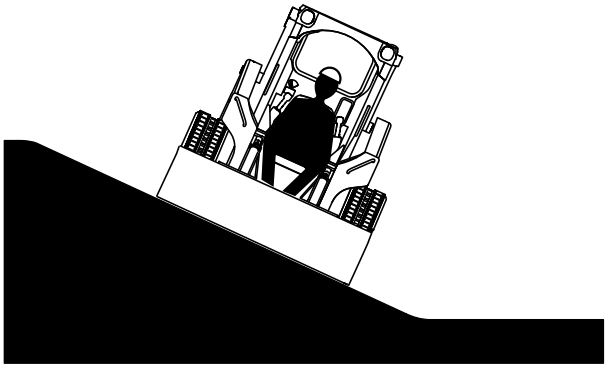

TX1064891 —UN—02OCT09

Constant Operation Across a Slope

TX1064892 —UN—02OCT09

One Track on Slope

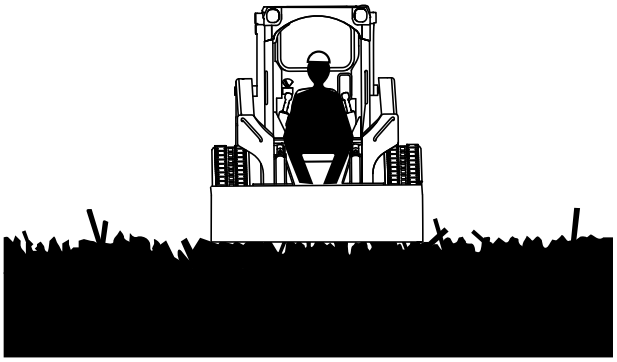

TX1064893 —UN—02OCT09

Jagged Surface

4. Alternate turning direction. Continuous turning in the same direction can create an accelerated wear pattern on undercarriage components.

JS90457,0000254 -19-14FEB18-1/1

Sprocket Teeth Wear

Under sandy conditions, teeth can wear faster. The embedded metal inserts will wear a pocket into the sprocket. Check for wear on the top of sprocket teeth (1).

1— Top of Sprocket Teeth

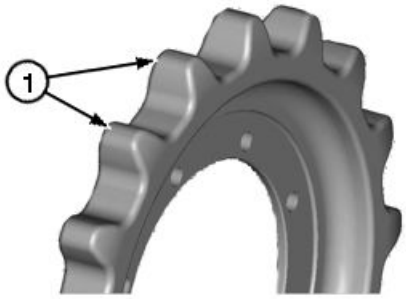

TX1021373 —UN—01MAY07

Sprocket Teeth Wear

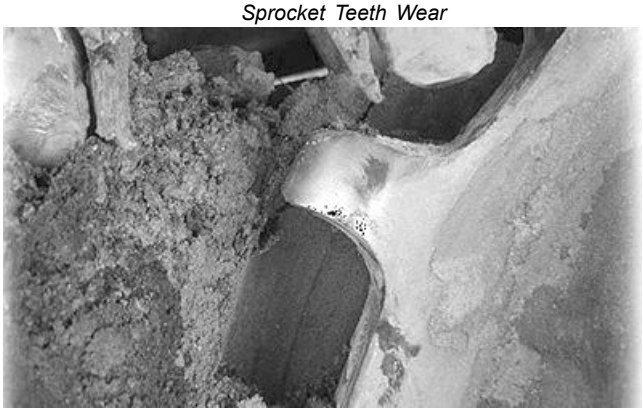

TX1021390A —UN—30MAR07

Sprocket Tooth Profile Wear

OUT4001,00004A0 -19-06DEC12-1/1

Normal Break-In

In these examples of normal wear, the rubber has been removed by friction to expose the metal on the guide lugs.

The guide lugs have a very light coating of rubber over them that will wear off quickly.

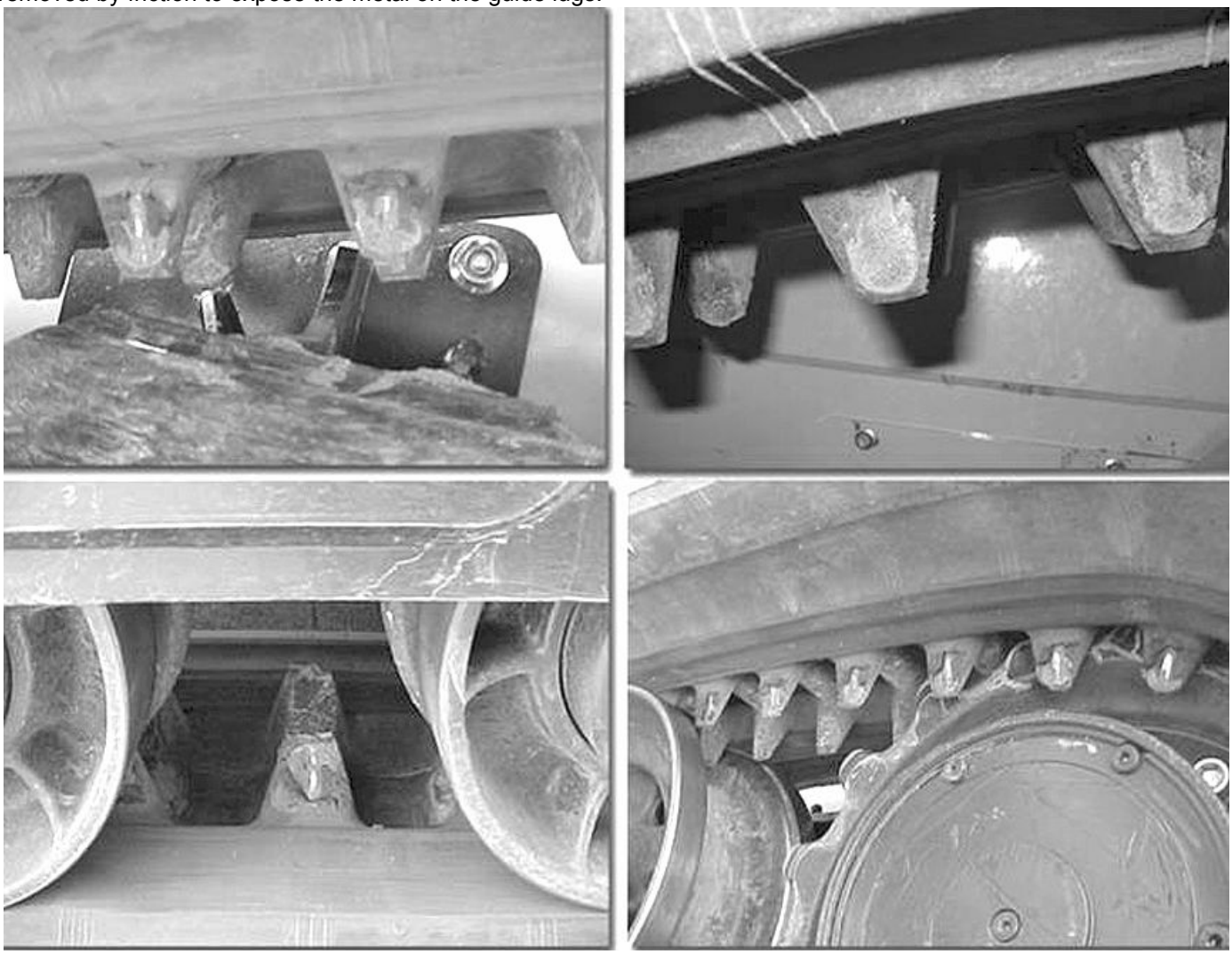

TX1021391A —UN—30MAR07

Examples of Normal Break-In

OUT4001,000049E -19-21SEP09-1/1

Normal Track Wear in Dirt Conditions

In dirt conditions, tracks will show wear lines (small cracks) but will not have rubber chunks being removed.

TX1021570A —UN—04APR07

Normal Track Wear in Dirt Conditions

OUT4001,00004A2 -19-22OCT12-1/1

Rubber Track—Types of Damage

Cut on Tread Lug Side Rubber

Cut on tread lug side rubber often occurs as one of the most typical malfunctions. A cut on the tread lug side is most likely caused by counter rotating on hard, sharp material or by driving over a hard sharp object.

When a cut on the lug side rubber reaches the embedded steel cord, cords can rapidly corrode due to foreign material entry and can cause premature malfunction of the track.

TX1021393A —UN—30MAR07

Counter Rotating Damage

TX1021394A —UN—30MAR07

Driving Over Sharp Object

OUT4001,00004A1 -19-08OCT15-1/7

Crack on Tread Lug Side Rubber—Fatigue

Small cracks occur as a result of operation fatigue or long-term environmental damage such as sun or chemicals.

When the cracks reach so deep that they expose the steel cords, premature malfunction can occur.

TX1021403A —UN—30MAR07

Fatigue

Continued on next page

OUT4001,00004A1 -19-08OCT15-2/7

Cuts on the Edges of the Track Roller Side Rubber

Edge (1) cuts indicate normal wear, which can be caused by hitting rocks, sticks, or other sharp objects. This type of damage does not usually occur on soft ground or small gravel. As long as the cut does not enter the cords or metal, no action is necessary.

1— Edge

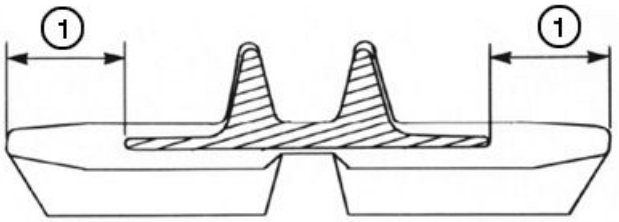

TX1021375 —UN—01MAY07

Edge of Track Roller

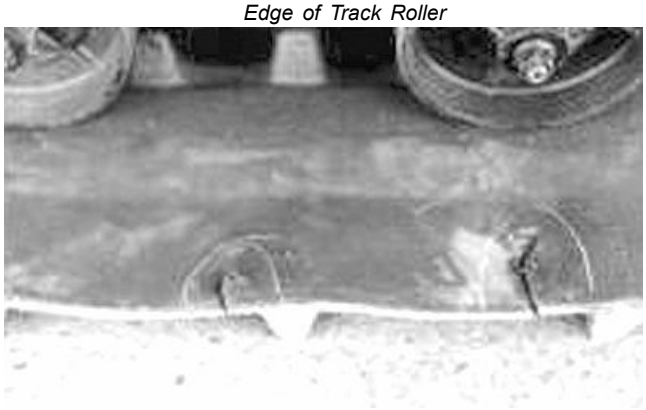

TX1021407A —UN—30MAR07

Cuts on the Edges of the Track Roller Side Rubber

OUT4001,00004A1 -19-08OCT15-3/7

Tread Lug Abrasion

Lug abrasion is normal and the track can be replaced when the lug height becomes less than 5 mm (0.2 in). Running machine on hard surfaces such as pavement can decrease track life significantly. Owner can run the track until smooth if necessary.

TX1021408A —UN—30MAR07

Tread Lug Abrasion

Continued on next page

OUT4001,00004A1 -19-08OCT15-4/7

Deterioration of the Track Roller Side Rubber Surface

In normal applications with gravel, the rubber surface wears down until the metal is exposed. Replacing the rubber track is recommended when more than half of the embedded metals are exposed.

In normal soil conditions, the inside rubber wears but will not come out in chunks. The ride becomes rough as the rubber wears down.

When running machine in rocky conditions, cuts in the rubber can cause the rubber to come out in chunks. The embedded metal becomes exposed.

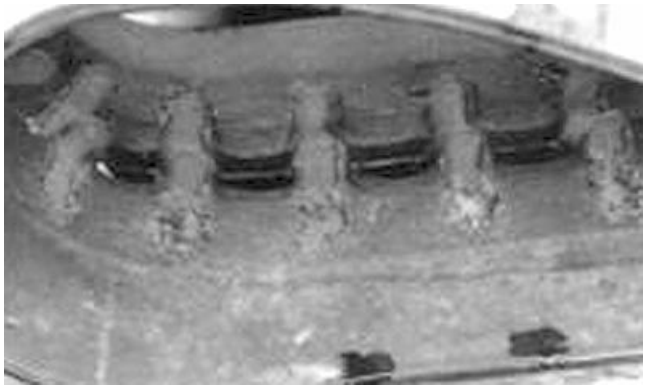

TX1021415A —UN—30MAR07

Track Roller

TX1021563A —UN—04APR07

Results of Running in Heavy Rock Condition

OUT4001,00004A1 -19-08OCT15-5/7

Separation of Metal Inserts—External Forces and Corrosion

Metal inserts should not separate from the track unless there is abuse of the track or machine is operated in a corrosive environment. The metal insert separates at the end of the track's life span. Replacing the complete track is suggested when even partial separation or corrosion occurs.

Foreign material entering the track system, such as reinforcing rod from concrete or sharp rock, can cause this type of damage.

TX1021566A —UN—04APR07

Separation of Metal Inserts

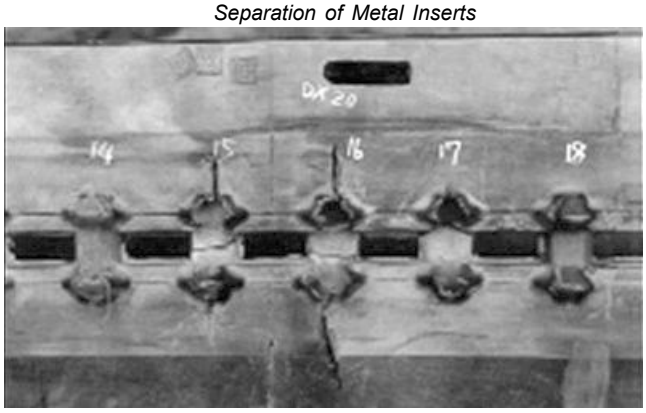

TX1021567A —UN—04APR07

Separation of Metal Inserts

Continued on next page

OUT4001,00004A1 -19-08OCT15-6/7

Cut Steel Cord

If embedded steel cords are cut off, replacement is required. Heavy damage may be the result of a sharp edge and possibly counter rotating on the sharp edge.

TX1021568A —UN—04APR07

Cut Steel Cord

OUT4001,00004A1 -19-08OCT15-7/7

Required Emission-Related Information

Service Provider

A repair shop or person of the owner's choosing may maintain, replace, or repair emission control devices and systems with original or equivalent replacement parts. However, warranty, recall, and all other services paid for by John Deere must be performed at an authorized John Deere service center.

DX,EMISSIONS,REQINFO -19-08DEC23-1/1

Diesel Fuel

Consult a local fuel distributor for properties of the diesel fuel available in the area.

In general, diesel fuels are blended to satisfy the low temperature requirements of the geographical area in which they are marketed.

Diesel fuels specified to EN 590 or ASTM D975 are recommended. Renewable diesel fuel produced by hydrotreating animal fats and vegetable oils is basically identical to petroleum diesel fuel. Renewable diesel fuel that meets EN 590 or ASTM D975 is acceptable for use at all percentage mixture levels.

Required Fuel Properties

In all cases, the fuel shall meet the following properties:

- **Cetane number** of 40 minimum. Cetane number greater than 47 is preferred, especially for temperatures below –20 °C (–4 °F) or eleva ons above 1675 m (5500 ft.)
- **Cloud Point** should be below the expected lowest ambient temperature or Cold Filter Plugging Point (CFPP) should be a maximum 10°C (18°F) below the fuel cloud point.
- **Fuel lubricity** should pass a maximum scar diameter of 0.52 mm as measured by ASTM D6079 or ISO 12156-1. A maximum scar diameter of 0.45 mm is preferred.
- **Diesel fuel quality and sulfur content** must comply with all exis ng emissions regula ons for the area in which the engine operates. DO NOT use diesel fuel with sulfur content greater than 10 000 mg/kg (10 000 ppm).
- **Materials** such as copper, lead, zinc, n, brass and bronze should be avoided in fuel handling, distribu on and storage equipment as these metals can catalyze fuel oxida on reac ons which can lead to fuel system deposits and plugged fuel filters.

E-Diesel fuel

CAUTION: Avoid severe injury or death due to the fire and explosion risk from using E-Diesel fuel.

DO NOT use E-Diesel (Diesel fuel and ethanol blend).

Use of E-Diesel fuel in any John Deere machine may void the machine warranty.

Sulfur Content for Engines That Meet Interim Tier 4, Final Tier 4, Stage III B, Stage IV, and Stage V Engines

- Use ONLY ultra low sulfur diesel (ULSD) fuel with a maximum of 15 mg/kg (15 ppm) sulfur content.

Use of fuel other than ULSD will reduce the efficiency and durability of the engine, will harm and permanently damage the engine's advanced emissions control systems, reduce fuel economy, and possibly prevent the engine from running at all. Emission-related warranties are likely to be rendered void by the use of fuel that does not meet these specifications.

Sulfur Content for Engines That Meet Tier 3 and Stage III A Engines

- Use of diesel fuel with sulfur content less than 2000 mg/kg (2000 ppm) is RECOMMENDED.
- Use of diesel fuel with sulfur content 2000—5000 mg/kg (2000—5000 ppm) REDUCES the oil and filter change interval.
- BEFORE using diesel fuel with sulfur content greater than 5000 mg/kg (5000 ppm), contact an authorized John Deere dealer.

Sulfur Content for Engines That Meet Tier 2 and Stage II Engines

- Use of diesel fuel with sulfur content less than 2000 mg/kg (2000 ppm) is RECOMMENDED.
- Use of diesel fuel with sulfur content 2000—5000 mg/kg (2000—5000 ppm) REDUCES the oil and filter change interval.
- BEFORE using diesel fuel with sulfur content greater than 5000 mg/kg (5000 ppm), contact an authorized John Deere dealer.

Sulfur Content for Other Engines

- Use of diesel fuel with sulfur content less than 5000 mg/kg (5000 ppm) is RECOMMENDED.
- Use of diesel fuel with sulfur content greater than 5000 mg/kg (5000 ppm) REDUCES the oil and filter change interval.

IMPORTANT: Do not mix used diesel engine oil or any other type of lubricating oil with diesel fuel.

Improper fuel additive usage may cause damage on fuel injection equipment of diesel engines.

MB60223,0000029 -19-31MAY24-1/1

Diesel Fuel Specifications

The engine in this machine is designed to operate only with ultra low sulfur diesel (ULSD) fuel. Use of fuel other than ULSD will reduce the efficiency and durability of the engine, will harm and permanently damage the engine's advanced emissions control systems, reduce fuel economy, and possibly prevent the engine from running at all. Emission-related warranties are likely to be rendered void by the use of fuel that does not meet these specifications.

TX,FUEL,SPECS -19-26OCT20-1/1

Lubricity of Diesel Fuel

Most diesel fuels manufactured in the United States, Canada, and the European Union have adequate lubricity to ensure proper operation and durability of fuel injection system components. However, diesel fuels manufactured in some areas of the world may lack the necessary lubricity.

IMPORTANT: Make sure the diesel fuel used in your machine demonstrates good lubricity characteristics.

Fuel lubricity should pass a maximum scar diameter of 0.52 mm as measured by ASTM D6079 or ISO 12156-1. A maximum scar diameter of 0.45 mm is preferred.

If fuel of low or unknown lubricity is used, add John Deere Fuel-Protect Diesel Fuel Conditioner (or equivalent) at the specified concentration.

Lubricity of BioDiesel Fuel

Fuel lubricity can improve significantly with BioDiesel blends up to B20 (20% BioDiesel). Further increase in lubricity is limited for BioDiesel blends greater than B20.

DX,FUEL5 -19-07FEB14-1/1

Handling and Storing Diesel Fuel

CAUTION: Reduce the risk of fire. Handle fuel carefully. DO NOT fill the fuel tank when engine is running. DO NOT smoke while you fill the fuel tank or service the fuel system.

Fill the fuel tank at the end of each day's operation to prevent water condensation and freezing during cold weather.

Keep all storage tanks as full as practical to minimize condensation.

Ensure that all fuel tank caps and covers are installed properly to prevent moisture from entering. Monitor water content of the fuel regularly.

When using biodiesel fuel, the fuel filter may require more frequent replacement due to premature plugging.

Check engine oil level daily prior to starting engine. A rising oil level may indicate fuel dilution of the engine oil.

IMPORTANT: The fuel tank is vented through the filler cap. If a new filler cap is required, always replace it with an original vented cap.

When fuel is stored for an extended period or if there is a slow turnover of fuel, add a fuel conditioner to stabilize the fuel. Keeping the free water drained and treating the bulk fuel storage tank quarterly with a maintenance dose of a biocide will prevent microbial growth. Contact your fuel supplier or John Deere dealer for recommendations.

DX,FUEL4 -19-13JAN18-1/1

Biodiesel Fuel

Biodiesel fuel is comprised of monoalkyl esters of long chain fatty acids derived from vegetable oils or animal fats. Biodiesel blends are biodiesel mixed with petroleum diesel fuel on a volume basis.

Before using fuel containing biodiesel, review the Biodiesel Use Requirements and Recommendations in this Operator's Manual.

Environmental laws and regulations can encourage or prohibit the use of biofuels. Operators should consult with appropriate governmental authorities prior to using biofuels.

John Deere Stage V Engines Operating in the European Union

Where the engine is to be operated within the Union on diesel or non-road gas-oil, a fuel with a FAME content not greater than 8% volume/volume (B8) shall be used.

John Deere Engines with Exhaust Filter Except Stage V Engines Operating in the European Union

Biodiesel blends up to B20 can be used ONLY if the biodiesel (100% biodiesel or B100) meets ASTM D6751, EN 14214, or equivalent specification. Expect a 2% reduction in power and a 3% reduction in fuel economy when using B20.

Biodiesel concentrations above B20 can harm the engine's emission control systems and should not be used. Risks include, but are not limited to, more frequent stationary regeneration, soot accumulation, and increased intervals for ash removal.

John Deere Fuel conditioners or equivalent, which contain detergent and dispersant additives, are required when using biodiesel blends from B10 to B20, and are recommended when using lower biodiesel blends.

John Deere Engines Without Exhaust Filter

Biodiesel blends up to B20 can be used ONLY if the biodiesel (100% biodiesel or B100) meets ASTM D6751, EN 14214, or equivalent specification. Expect a 2% reduction in power and a 3% reduction in fuel economy when using B20.

These John Deere engines can operate on biodiesel blends above B20 (up to 100% biodiesel). Operate at levels above B20 ONLY if the biodiesel is permitted by law and meets the EN 14214 specification (primarily available in Europe). Engines operating on biodiesel blends above B20 might not fully comply with or be permitted by all applicable emissions regulations. Expect up to a 12% reduction in power and an 18% reduction in fuel economy when using 100% biodiesel.

John Deere fuel conditioners or equivalent, which contain detergent and dispersant additives, are required when using biodiesel blends from B10 to B100, and are recommended when using lower biodiesel blends.

Biodiesel Use Requirements and Recommendations

The petroleum diesel portion of all biodiesel blends must meet the requirements of ASTM D975 (US) or EN 590 (EU) commercial standard.

Biodiesel users in the U.S. are strongly encouraged to purchase biodiesel blends from a BQ-9000 Certified Marketer and sourced from a BQ-9000 Accredited Producer (as certified by the National biodiesel Board). Certified Marketers and Accredited Producers can be found at the following website: http://www.bq9000.org.

Biodiesel contains residual ash. Ash levels exceeding the maximums allowed in either ASTM D6751 or EN14214 can result in more rapid ash loading and require more frequent cleaning of the Exhaust Filter (if present).

The fuel filter can require more frequent replacement when using biodiesel fuel, particularly if switching from diesel. Check engine oil level daily prior to starting engine. A rising oil level can indicate fuel dilution of the engine oil. Biodiesel blends up to B20 must be used within 90 days of the date of biodiesel manufacture. Biodiesel blends above B20 must be used within 45 days from the date of biodiesel manufacture.

When using biodiesel blends up to B20, the following must be considered:

- Cold-weather flow degradation
- Stability and storage issues (moisture absorption, microbial growth)
- Possible filter restriction and plugging (usually a problem when first switching to biodiesel on used engines)
- Possible fuel leakage through seals and hoses (primarily an issue with older engines)
- Possible reduction of service life of engine components

Request a certificate of analysis from your fuel distributor to ensure that the fuel is compliant with the specifications provided in this Operator's Manual.

Consult your John Deere dealer for John Deere fuel products to improve storage and performance with biodiesel fuels.

The following must also be considered if using biodiesel blends above B20:

- Possible coking or blocked injector nozzles, resulting in power loss and engine misfire if John Deere fuel additives and conditioners or equivalent containing detergent/dispersants are not used
- Possible crankcase oil dilution (requiring more frequent oil changes)
- Possible lacquering or seizure of internal components
- Possible formation of sludge and sediments
- Possible thermal oxidation of fuel at elevated temperatures

Continued on next page

DX,FUEL7 -19-13JAN18-1/2

- Possible compatibility issues with other materials (including copper, lead, zinc, tin, brass, and bronze) used in fuel handling, distribution, and storage equipment
- Possible reduction in water separator efficiency
- Possible damage to paint if exposed to biodiesel
- Possible corrosion of fuel injection equipment
- Possible elastomeric seal and gasket material degradation (primarily an issue with older engines)
- Possible high acid levels within fuel system
- Because biodiesel blends above B20 contain more ash, using blends above B20 can result in more rapid ash loading and require more frequent cleaning of the Exhaust Filter (if present)

IMPORTANT: Raw pressed vegetable oils are NOT acceptable for use as fuel in any concentration in John Deere engines. Their use could cause engine failure.

DX,FUEL7 -19-13JAN18-2/2

Testing Diesel Fuel

A fuel analysis program can help to monitor the quality of diesel fuel. The fuel analysis can provide critical data such as calculated cetane index, fuel type, sulfur content, water content, appearance, suitability for cold weather operations, bacteria, cloud point, acid number, particulate contamination, and whether the fuel meets ASTM D975 or equivalent specification.

Contact your John Deere dealer for more information on diesel fuel analysis.

DX,FUEL6 -19-13JAN18-1/1

Fuel Filters

The importance of fuel filtration cannot be overemphasized with modern fuel systems. The combination of increasingly restrictive emission regulations and more efficient engines requires fuel system to operate at much higher pressures. Higher pressures can only be achieved using fuel injection components with very close tolerances. These close manufacturing tolerances have significantly reduced capacities for debris and water.

John Deere brand fuel filters have been designed and produced specifically for John Deere engines.

To protect the engine from debris and water, always change engine fuel filters as specified in this manual.

DX,FILT2 -19-14APR11-1/1

Minimizing the Effect of Cold Weather on Diesel Engines

The engine in this machine is designed to operate effectively in cold weather.

However, for effective starting and cold-weather operation, a little extra care is necessary. The following information outlines steps that can minimize the effect that cold weather may have on starting and operation of an engine. See a John Deere dealer or other service provider for additional information and local availability of cold-weather aids.

Use Winter Grade Fuel

When temperatures fall below 0°C (32°F), winter grade fuel (No. 1-D in North America) is best suited for cold-weather operation. Winter grade fuel has a lower cloud point and a lower pour point.

Cloud point is the temperature at which wax begins to form in the fuel. This wax causes fuel filters to plug. **Pour point** is the lowest temperature at which movement of the fuel is observed.

NOTE: On average, winter grade diesel fuel has a lower Btu (heat content) rating. Using winter grade fuel may reduce power and fuel efficiency, but should not cause any other engine performance effects. Check the grade of fuel being used before troubleshooting for low-power complaints in cold-weather operation.

CAUTION: Ether is highly flammable. Do not use ether when starting an engine equipped with glow plugs.

Coolant Heater

An engine block heater (coolant heater) is an available option to aid cold-weather starting.

Seasonal Viscosity Oil and Proper Coolant Concentration

Use seasonal grade viscosity engine oil based on the expected air temperature range between oil changes and a proper concentration of low silicate antifreeze as recommended. (See DIESEL ENGINE OIL and ENGINE COOLANT requirements in this section.)

Diesel Fuel Flow Additive

Use John Deere fuel-protect diesel fuel conditioner (winter formula), which contains anti-gel chemistry, or equivalent fuel conditioner to treat non-winter grade fuel (No. 2-D in North America) during the cold-weather season. This generally extends operability to about 10°C (18°F) below the fuel cloud point. For operability at even lower temperatures, use winter grade fuel.

IMPORTANT: Treat fuel when outside temperature drops below 0°C (32°F). For best results, use with untreated fuel. Follow all recommended instructions on label.

BioDiesel

When operating with biodiesel blends, wax formation can occur at warmer temperatures. Use John Deere fuel-protect diesel fuel conditioner (winter formula), at 5°C (41°F) to treat biodiesel fuels during the cold-weather season. Use B7 or lower blends at temperatures below 0°C (32°F). Use only winter grade petroleum diesel fuel at temperatures below -10°C (14°F).

Winterfronts

Use of fabric, cardboard, or solid winterfronts is not recommended with this engine. Their use can result in excessive engine coolant, oil, and charge air temperatures. This can lead to reduced engine life, loss of power, and poor fuel economy. Winterfronts may also put abnormal stress on fan and fan drive components potentially causing premature failures.

If winterfronts are used, they should never totally close off the grill frontal area. Approximately 25% area in the center of the grill should remain open at all times. At no time should the air blockage device be applied directly to the radiator core.

TX,FUEL10,C -19-29OCT24-1/1

Operating in Cold Temperature Climates

See Engine Block Heater—If Equipped. (Section 2-2.)

See Cold Weather Starting. (Section 2-2.)

The following oils are recommended for optimum starting performance:

Diesel Engine Oil

- John Deere Plus-50™ II

Hydraulic and Hydrostatic Oil

- John Deere Hydrau™XR

Plus-50 is a trademark of Deere & Company
Hydrau is a trademark of Deere & Company

CN93077,000065D -19-10SEP15-1/1

Operating at High Altitude

When operating at high altitudes, a cold start package is available to assist in starting the machine. The cold start package consists of: engine block heater, hydraulic bypass functionality, and lower viscosity oil.

The cold start package is recommended for altitudes over 1829 m (6000 ft.) and required for altitudes over 3048 m (10,000 ft.).

See Engine Block Heater—If Equipped. (Section 2-2.)

Follow cold weather starting procedure. See Cold Weather Starting. (Section 2-2.)

For recommended oils for improving starting performance, see Operating in Cold Temperature Climates in this section.

JK47244,0000335 -19-02OCT13-1/1

Diesel Engine Oil — Interim Tier 4, Final Tier 4, Stage IIIB, Stage IV, and Stage V

Failure to follow applicable oil standards and drain intervals can result in severe engine damage that might not be covered under warranty. Warranties, including the emissions warranty, are not conditioned on the use of John Deere oils, parts, or service.

Use oil viscosity based on the expected air temperature range during the period between oil changes.

John Deere Plus-50™ II is the recommended engine oil.

Extended service intervals may apply when John Deere Plus-50™ II engine oil is used. Refer to the engine oil drain interval table and consult your John Deere dealer for more information.

If John Deere Plus-50™ II engine oil is not available, engine oil meeting one or more of the following may be used:

- API Service Category CK-4
- API Service Category CJ-4
- ACEA Oil Sequence E9
- ACEA Oil Sequence E6

DO NOT use engine oil containing more than 1.0% sulfated ash, 0.12% phosphorus, or 0.4% sulfur.

Multi-viscosity diesel engine oils are preferred.

Diesel fuel quality and fuel sulfur content must comply with all existing emissions regulations for the area in which the engine operates.

Plus-50 is a trademark of Deere & Company

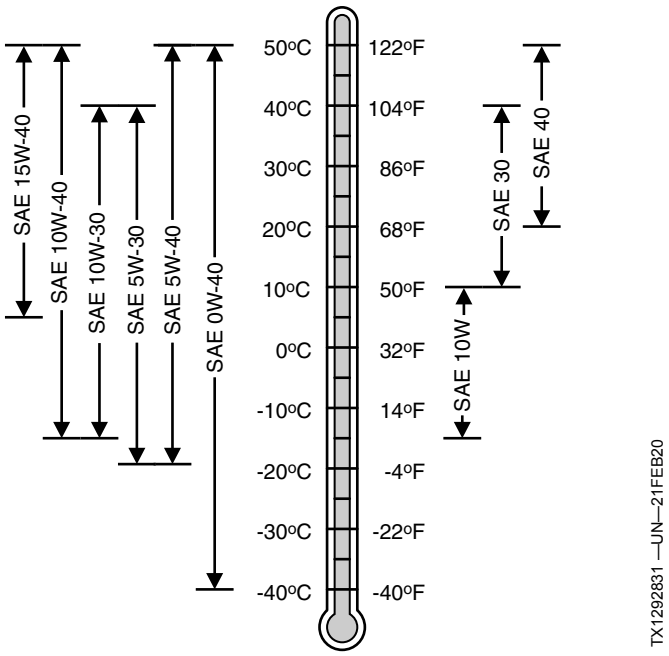

Oil Viscosities for Air Temperature Ranges

IMPORTANT: Use only ultra low sulfur diesel (ULSD) fuel with a maximum sulfur content of 15 mg/kg (15 ppm).

TX,SSL,ENOIL -19-18MAR20-1/1

Engine Oil and Filter Service Intervals — Interim Tier 4, Final Tier 4, Stage IIIB, Stage IV, and Stage V Engines

Failure to follow applicable oil standards and drain intervals can result in severe engine damage that might not be covered under warranty. Warranties, including the emissions warranty, are not conditioned on the use of John Deere oils, parts, or service.

Recommended oil and filter service intervals are based on a combination of oil pan capacity, type of engine oil and filter used, and sulfur content of the diesel fuel. Actual service intervals also depend on operation and maintenance practices.

Approved Oil Types:

- John Deere Plus-50™ II
- "Other Oils" include API CK-4, API CJ-4, ACEA E9, and ACEA E6

Use oil analysis to evaluate the condition of the oil and to aid in selection of the proper oil and filter service interval. Contact your John Deere dealer or other qualified service provider for more information on engine oil analysis.

Change the oil and oil filter at least once every 12 months even if the hours of operation are fewer than the otherwise recommended service interval.

Diesel fuel sulfur content affects engine oil and filter service intervals. Higher fuel sulfur levels reduce oil and filter service intervals.

Use of diesel fuel with sulfur content less than 15 mg/kg (15 ppm) is REQUIRED.

Plus-50 is a trademark of Deere & Company

Engine operation at high altitude decreases oil change intervals. See Diesel Engine Oil Service Interval for Operation at High Altitude for additional information.

NOTE: The 500 hour extended oil and filter change interval is only allowed if all of the following conditions are met:

- *Use of diesel fuel with sulfur content less than 15 mg/kg (15 ppm)*
- *Use of John Deere Plus-50™ II oil*
- *Use of an approved John Deere oil filter*

Engine Oil and Filter Service Intervals	
John Deere Plus-50™ II	500 hours
Other Oils	250 hours
Oil analysis may extend the service interval of "Other Oils" to a maximum not to exceed the interval of Plus-50™ II oils. Oil analysis means taking a series of oil samples at 50-hour increments beyond the normal service interval until either the data indicates the end of useful oil life or the maximum service interval of John Deere Plus-50 II oils is reached.	

IMPORTANT: To avoid engine damage:

- **Reduce oil and filter service intervals by 50% when using biodiesel blends greater than B20. Oil analysis may allow longer service intervals.**
- **Use only approved oil types.**

DX,ENOIL15,IT4,120toMAX -19-13JAN18-1/1

Diesel Engine Oil Service Interval for Operation at High Altitude

IMPORTANT: Diesel fuel sulfur content also affects engine oil and filter service intervals. See Engine Oil and Service Intervals in this section to determine the appropriate service interval prior to performing high altitude recommendations.

To avoid excessive oil degradation and potential engine damage, reduce oil and filter service intervals to 50% of the original recommended values when operating engines at altitudes above **1676 m (5500 ft)**.

Oil analysis may allow longer service intervals.

Use only approved oil types.

Example of Original Hours	Corresponding High Altitude Hours
125	60
150	75
175	85
200	100
250	125
275	135
300	150
350	175
375	185
400	200
500	250

TX,ENOIL,SERV,HIALT -19-24JUN20-1/1

Oil Filters

Filtration of oils is critically important for proper operation and lubrication. John Deere brand oil filters have been designed and produced specifically for John Deere applications.

John Deere filters adhere to engineering specifications for quality of the filter media, filter efficiency rating, strength of the bond between the filter media and the element end cap, fatigue life of the canister (if applicable), and pressure capability of the filter seal. Non-John Deere branded oil filters might not meet these key John Deere specifications.

Always change oil filters regularly as specified in this manual.

DX,FILT1 -19-11APR11-1/1

Diesel Engine Coolant (engine without wet sleeve cylinder liners)

Failure to follow applicable coolant standards and drain intervals can result in severe engine damage that may not be covered under warranty. Warranties including the emissions warranty are not conditioned on the use of John Deere coolants, parts, or service.

Preferred Coolants

The following pre-mix engine coolants are preferred:

- **John Deere COOL-GARD™II**
- **John Deere COOL-GARD II PG**

COOL-GARD II pre-mix coolant is available in several concentrations with different freeze protection limits as shown in the following table.

COOL-GARD II pre-mix	Freeze Protection Limit
COOL-GARD II Water-Base	0°C (32°F)
COOL-GARD II 20/80	-9°C (16°F)
COOL-GARD II 30/70	-16°C (3°F)
COOL-GARD II 50/50	-37°C (-34°F)
COOL-GARD II 55/45	-45°C (-49°F)
COOL-GARD II PG 60/40	-49°C (-56°F)
COOL-GARD II 60/40	-52°C (-62°F)

Not all COOL-GARD II pre-mix products are available in all countries.

Use COOL-GARD II PG when a non-toxic coolant formulation is required.

Additional Recommended Coolants

The following engine coolant is also recommended:

- John Deere COOL-GARD II Concentrate in a 40—60% mixture of concentrate with quality water.

IMPORTANT: When mixing coolant concentrate with water, do not use less than 40% or greater than 60% concentration of coolant. Less than 40% gives inadequate additives for corrosion protection. Greater than 60% can result in coolant gelation and cooling system problems.

Other Coolants

Other ethylene glycol or propylene glycol base coolants may be used if they meet one of the following specifications:

- Pre-mix coolant meeting ASTM D6210 requirements
- Are nitrite-free
- Is formulated with a 2-ethylhexanoic acid (2-EHA) free additive package
- Coolant concentrate meeting ASTM D6210 requirements in a 40—60% mixture of concentrate with quality water intended for a 50/50 concentrate
- Pre-mix coolant meeting ASTM D3306 requirements
- Coolant concentrate meeting ASTM D3306 requirements in a 40—60% mixture of concentrate with quality water intended for a 50/50 concentrate

If coolant meeting one of these specifications is unavailable, use a coolant concentrate or pre-mix coolant that has a minimum of the following chemical and physical properties:

- Is formulated with a nitrite-free additive package
- Is formulated with a 2-ethylhexanoic acid (2-EHA) free additive package
- Protects the cooling system metals (cast iron, aluminum alloys, and copper alloys such as brass) from corrosion

Water Quality

Water quality is important to the performance of the cooling system. Deionized or demineralized water is recommended for mixing with ethylene glycol and propylene glycol base engine coolant concentrate.

Coolant Drain Intervals

Drain and flush the cooling system and refill with fresh coolant at the indicated interval, which varies with the coolant used.

When COOL-GARD II or COOL-GARD II PG is used, the drain interval is 6 years or 6000 hours of operation.

If a coolant other than COOL-GARD II or COOL-GARD II PG is used, reduce the drain interval to 2 years or 2000 hours of operation.[1]

IMPORTANT: Do not use cooling system sealing additives or antifreeze that contains sealing additives.

Do not mix ethylene glycol and propylene glycol base coolants.

Do not use coolants that contain nitrites.

COOL-GARD is a trademark of Deere & Company

[1]Coolant analysis may extend the service interval of other "Coolants" to a maximum not to exceed the interval of Cool-Gard II coolants. Coolant analysis means taking a series of coolant samples at 1000-hour increments beyond the normal service interval until either the data indicate the end of useful coolant life or the maximum service interval of Cool-Gard coolants is reached.

DX,COOL18 -19-15JUL20-1/1

Water Quality for Mixing with Coolant Concentrate

Engine coolants are a combination of three chemical components: ethylene glycol (EG) or propylene glycol (PG) antifreeze, inhibiting coolant additives, and quality water.

Water quality is important to the performance of the cooling system. Deionized or demineralized water is recommended for mixing with ethylene glycol and propylene glycol base engine coolant concentrate.

All water used in the cooling system should meet the following minimum specifications for quality:

Chlorides	<40 mg/L
Sulfates	<100 mg/L
Total solids	<340 mg/L
Total dissolved I hardness	<170 mg/L
pH	5.5—9.0

IMPORTANT: Do not use bottled drinking water because it often contains higher concentrations of total dissolved solids.

Freeze Protection

The relative concentrations of glycol and water in the engine coolant determine its freeze protection limit.

Ethylene Glycol	Freeze Protection Limit
40%	-24°C (-12°F)
50%	-37°C (-34°F)
60%	-52°C (-62°F)
Propylene Glycol	**Freeze Protection Limit**
40%	-21°C (-6°F)
50%	-33°C (-27°F)
60%	-49°C (-56°F)

DO NOT use a coolant-water mixture greater than 60% ethylene glycol or 60% propylene glycol.

DX,COOL19 -19-13JAN18-1/1

Operating in Warm Temperature Climates

John Deere engines are designed to operate using recommended engine coolants.

Always use a recommended engine coolant, even when operating in geographical areas where freeze protection is not required.

IMPORTANT: Water may be used as coolant *in emergency situations only.*

Foaming, hot surface aluminum and iron corrosion, scaling, and cavitation occur when water is used as the coolant, even when coolant conditioners are added.

Drain cooling system and refill with recommended engine coolant as soon as possible.

DX,COOL6 -19-17FEB20-1/1

Testing Coolant Freeze Point

The use of a handheld coolant refractometer is the quickest, easiest, and most accurate method to determine coolant freeze point. This method is more accurate than a test strip or a float-type hydrometer which can produce poor results.

A coolant refractometer is available through your John Deere dealer under the SERVICEGARD™ tool program. Part number 75240 provides an economical solution to accurate freeze point determination in the field.

To use this tool:

1. Allow cooling system to cool to ambient temperatures.
2. Open radiator cap to expose coolant.
3. With the included dropper, collect a small coolant sample.
4. Open the lid of the refractometer, place one drop of coolant on the window and close the lid.
5. Look through the eyepiece and focus as necessary.
6. Record the listed freeze point for the type of coolant (ethylene glycol coolant or propylene glycol) being tested.

TS1732 —UN—04SEP13

SERVICEGARD™ Part Number 75240

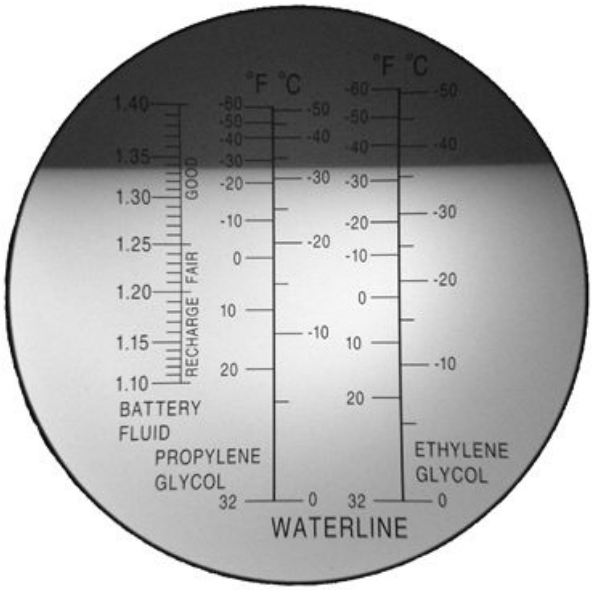

TS1733 —UN—04SEP13

Image with a Drop of 50/50 Coolant Placed on the Refractometer Window

SERVICEGARD is a trademark of Deere & Company

DX,COOL,TEST -19-13JUN13-1/1

Disposing of Coolant

Improperly disposing of engine coolant can threaten the environment and ecology.

Use leakproof containers when draining fluids. Do not use food or beverage containers that may mislead someone into drinking from them.

Do not pour waste onto the ground, down a drain, or into any water source.

Inquire on the proper way to recycle or dispose of waste from a local environmental or recycling center, or from a John Deere dealer or other service provider..

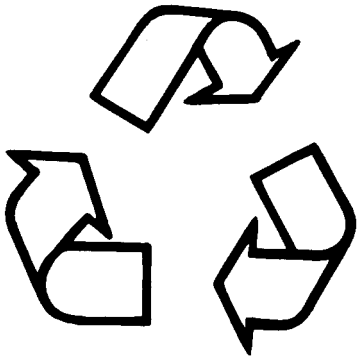

TS1133 —UN—15APR13

Recycle Waste

TX,COOL,DISP -19-29OCT24-1/1

Alternative and Synthetic Lubricants

Conditions in certain geographical areas may require lubricant recommendations different from those printed in this manual.

Some John Deere brand coolants and lubricants may not be available in your location.

Consult your John Deere dealer to obtain information and recommendations.

Synthetic lubricants may be used if they meet the performance requirements as shown in this manual.

The temperature limits and service intervals shown in this manual apply to John Deere branded fluids or fluids that have been tested and/or approved for use in John Deere equipment.

Re-refined base stock products may be used if the finished lubricant meets the performance requirements.

DX,ALTER -19-13JAN18-1/1

Hydraulic and Hydrostatic Oil

Use oil viscosity based on the expected air temperature range during the period between oil changes.

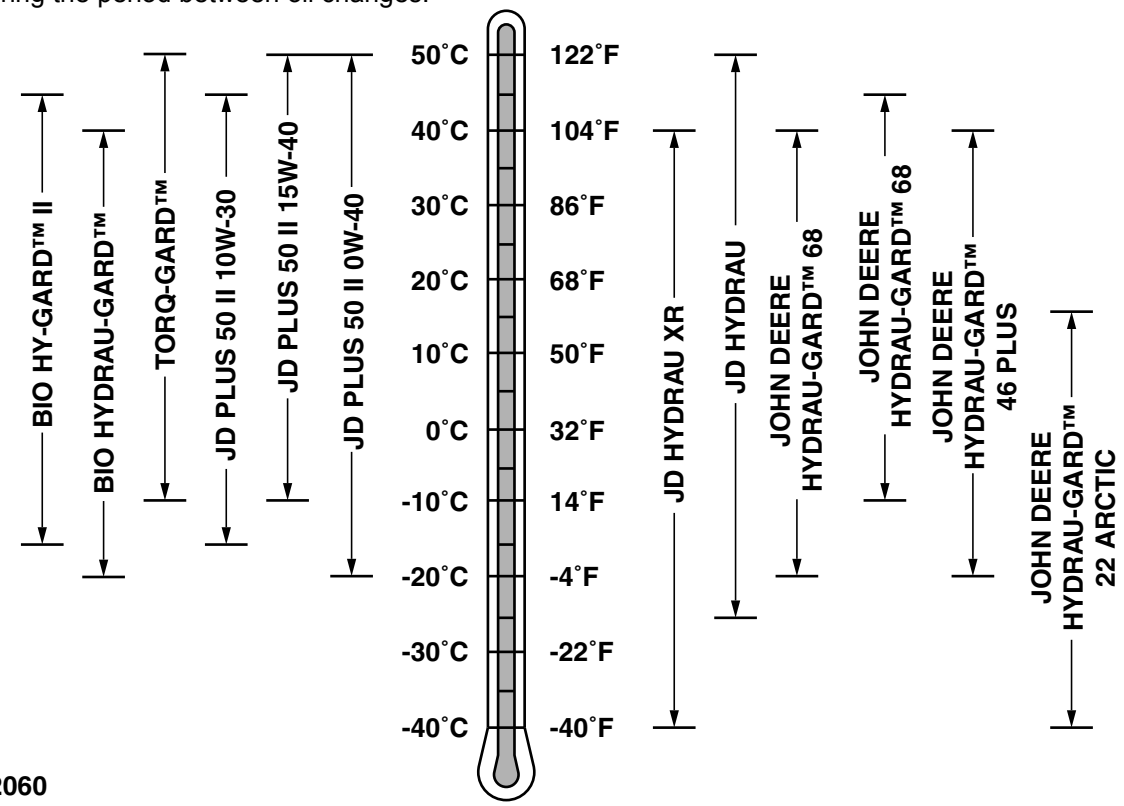

TX1392060

Oil Viscosities for Air Temperature Ranges

IMPORTANT: To avoid machine damage. Do not mix fluids of different type or brand. Do not mix zinc-free and zinc-based. Mixing fluids can result in additive fall-out and lubricant degradation.

Other hydraulic oils may be used, at a reduced service interval, if they meet the following specification.

- Anti-Wear Hydraulic Oils (AWHO):
  - ISO 11158 Category HV
  - DIN 51524-3

TX,HYDOIL,G -19-07FEB25-1/1

Hydrostatic Planetary Gear Case Oil

SAE 80W90 is the acceptable oil for all temperature ranges.

The following oil is preferred:

- John Deere GL-5 GEAR LUBRICANT

Other oils may be used if they meet API Service Classification GL-5.

DB84312,000024E -19-13FEB18-1/1

Multipurpose Extreme Pressure (EP) Grease

IMPORTANT: For automated lubrication systems different ambient air temperatures need to be considered.

Use grease based on NLGI consistency numbers and the expected air temperature range during the service interval.

John Deere SD Polyurea Grease is preferred.

The following greases are also recommended:

- John Deere HD Lithium Complex Grease
- John Deere Grease-Gard™ Premium Plus

Other greases may be used if they meet the following:

- NLGI Performance Classification GC-LB
- ISO-L-X-BDHB 2 or DIN KP 2 N-10 Lithium Complex, Non-Synthetic Base Oil (100 to 220 mm2/s @ 40°C)

IMPORTANT: Some types of thickeners, base oils, and additives used in greases are not compatible with others. Mixing greases should be avoided. Consult your grease supplier before mixing different types of grease.

Grease-Gard is a trademark of Deere & Company

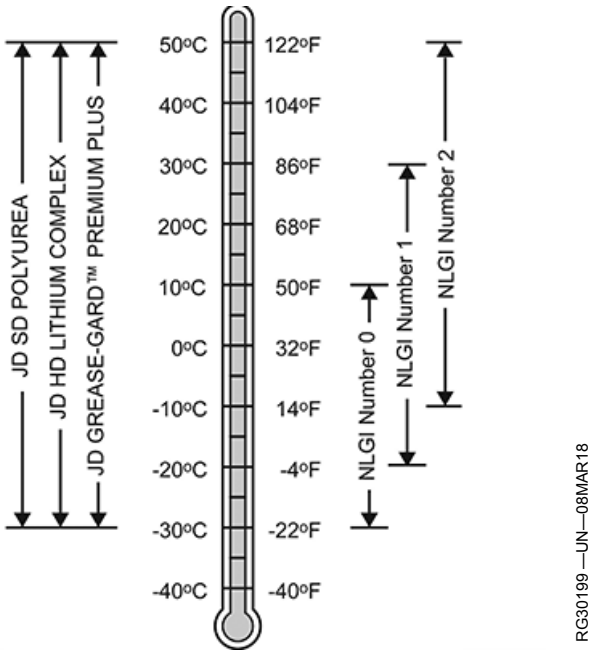

Greases for Air Temperature Ranges

DX,GREA1 -19-13JAN18-1/1

Lubricant Storage

Your equipment can operate at top efficiency only when clean lubricants are used.

Use clean containers to handle all lubricants.

Whenever possible, store lubricants and containers in an area protected from dust, moisture, and other contamination. Store containers on their side to avoid water and dirt accumulation.

Make certain that all containers are properly marked to identify their contents.

Properly dispose of all old containers and any residual lubricant they may contain.

DX,LUBST -19-18MAR96-1/1

Mixing of Lubricants

In general, avoid mixing different brands or types of oil. Oil manufacturers blend additives in their oils to meet certain specifications and performance requirements.

Mixing different oils can interfere with the proper functioning of these additives and degrade lubricant performance.

Consult your John Deere dealer to obtain specific information and recommendations.

DX,LUBMIX -19-18MAR96-1/1

Engine Identification

Depending upon machine, three engine options are available: 4TNV98CT, 4TNV98C, or 4TNV98T. Use the following information to identify engine model.

IMPORTANT: Use only supporting manuals designated for your specific machine. If incorrect manual is chosen, improper service may occur. Verify product identification number (PIN) when choosing the correct manual.

Choosing the Correct Supporting Manuals

John Deere skid steers are available in different machine configurations based on the various markets into which they are sold. Different supporting manuals exist for different machine configurations.

For more information, see Manual Identification.

Engine Serial and Model Number Identification

The engine serial number tag (3) is located on top of engine rocker arm cover.

The engine model number (2) can be used to identify an engine as either a turbocharged or naturally-aspirated engine based on machine application.

NOTE: Machines equipped with Yanmar 4TNV98C (naturally-aspirated) engines are not recommended for altitudes above 1524 m (5000 ft.).

Engine Model Number	
4TNV98CT	Final Tier 4 and Stage III A turbocharged engine
4TNV98C	Final Tier 4 and Stage III A naturally-aspirated engine
4TNV98T	Interim Tier 4 and Stage III A turbocharged engine

1— Engine Serial Number
2— Engine Model Number
3— Engine Serial Number Tag

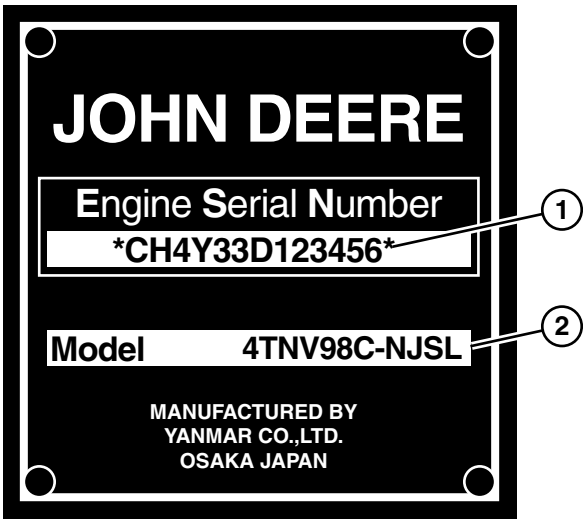

TX1144002 —UN—13SEP13

Example of Engine Serial Number Plate

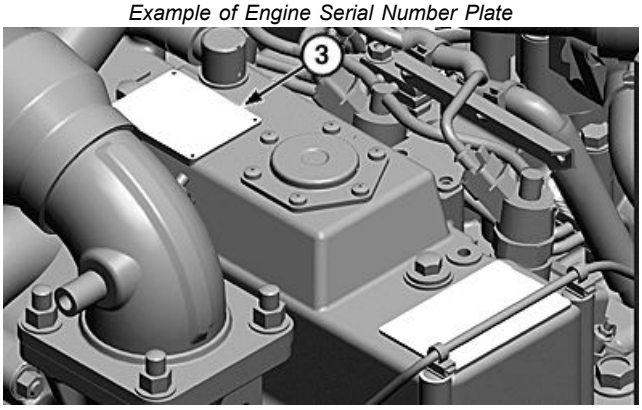

TX1142565 —UN—19AUG13

Engine Serial Number Final Tier 4

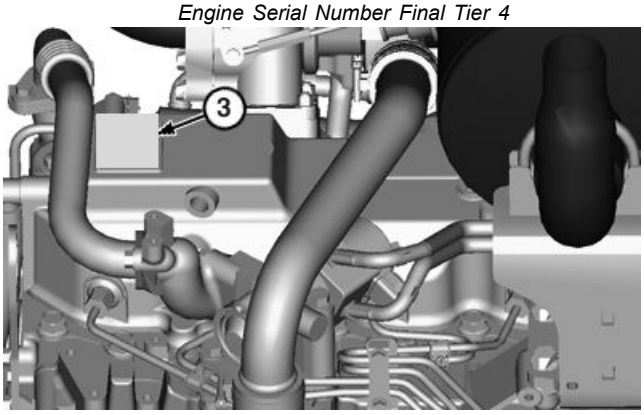

TX1142629 —UN—20AUG13

Engine Serial Number Interim Tier 4

Continued on next page

JK47244,000033C -19-17SEP13-1/2

Engine Component Identification

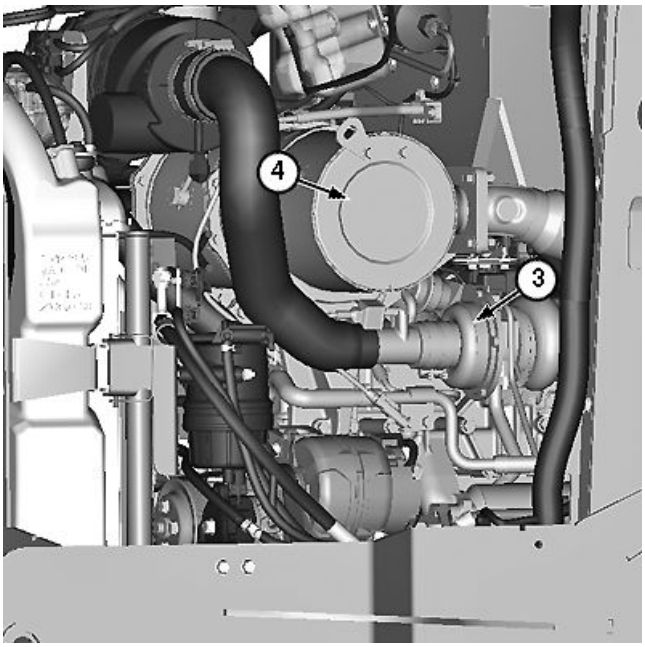

TX1142558 —UN—13SEP13

4TNV98CT Engine

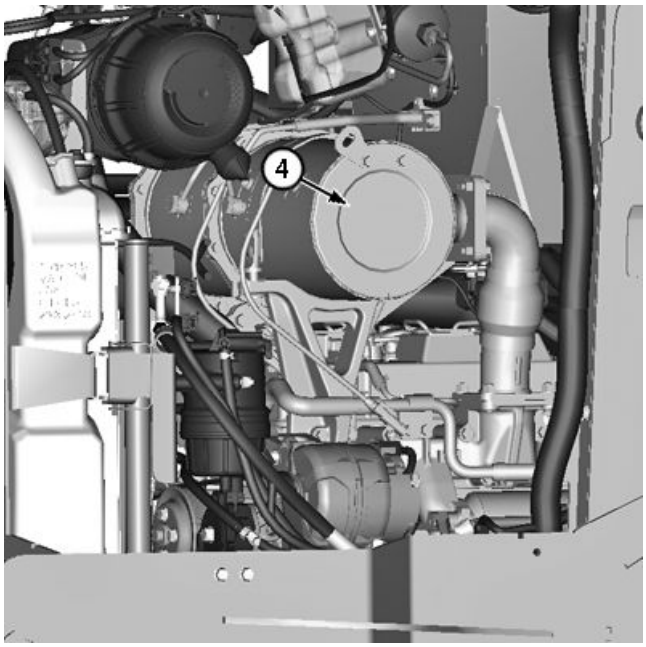

TX1142559 —UN—13SEP13

4TNV98C Engine

Machines equipped with a 4TNV98CT engine, utilize a turbocharger (3) and diesel exhaust filter (4).

Machines equipped with a 4TNV98C engine, utilize a diesel exhaust filter but no turbocharger (naturally aspirated).

Machines equipped with a 4TNV98T engine, utilize a turbocharger and muffler (5).

3— Turbocharger
4— Diesel Exhaust Filter
5— Muffler

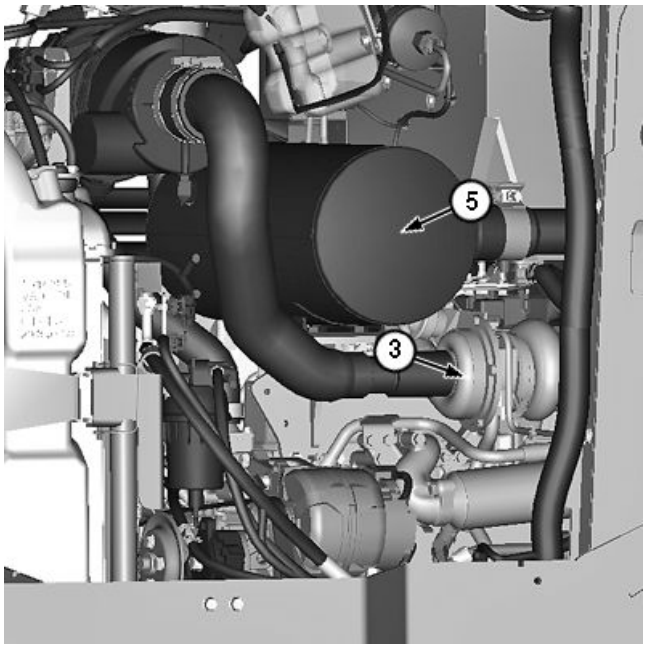

TX1142560 —UN—16SEP13

4TNV98T Engine

JK47244,000033C -19-17SEP13-2/2

Service Machine at Specified Intervals

Lubricate and make service checks and adjustments at intervals shown on the periodic maintenance chart and on the following pages. The periodic maintenance chart is located on the underside of engine cover.

Perform service on items at multiples of the original requirement. For example, at 500 hours, also service those items, if applicable, listed under 250 hours, 50 hours, and 10 hours or daily.

JB92884,0000154 -19-09MAY17-1/1

Check Hour Meter Regularly

NOTE: Hour meter (1) display is located in top left corner of the engagement and monitor unit (EMU) window.

Press UP or DOWN arrows to toggle between engine hours, battery voltage, job timer, hydraulic oil temperature, engine coolant temperature, and engine speed indicators.

Use the hour meter (1) to determine when the machine needs periodic maintenance.

Intervals on the periodic maintenance chart are for operating in normal conditions. If operating machine in severe conditions, machine should be serviced at shorter intervals.

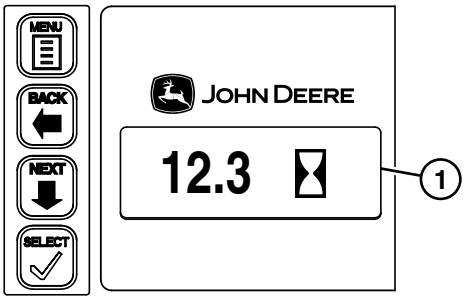

TX1144063 —UN—16SEP13

Display Window (hour meter shown)

1— Hour Meter

RE59955,0001115 -19-17APR17-1/1

Fuel Tank

CAUTION: Fuel is flammable and may ignite if spilled on hot engine. To prevent injury, handle fuel carefully. If engine is hot or running, do NOT fill the fuel tank. Do NOT smoke while filling fuel tank or working on fuel system.

IMPORTANT: Avoid engine damage. If machine has run out of fuel, engine will not start.

Contact a John Deere dealer or other service provider for instructions.

To avoid condensation, fill the fuel tank at the end of each workday. Shut off engine before filling.

KR46761,0000F5B -19-29OCT24-1/1

Raising and Blocking Machine

1. Park machine on level surface.
2. Remove any attachment.
3. Raise boom and lock in raised position. See Boom Lock. (Section 2-2.)
4. Engage park brake and stop engine.

CAUTION: To avoid injury from escaping fluid under pressure, stop engine and relieve the pressure in the system before disconnecting or connecting hydraulic or other lines. Tighten all connections before applying pressure.

5. Relieve hydraulic system pressure.

CAUTION: Prevent possible crushing injury from heavy component. Use appropriate lifting device.

6. Place appropriate lifting device under front center of machine base and raise machine.

Specification

320G—Operating Weight (approximate)..... 3246 kg
7150 lb

324G—Operating Weight (approximate)..... 3495 kg
7700 lb

325G—Operating Weight (approximate)..... 4381 kg
9658 lb

7. Place blocks or stands under front corners (1) of machine base.
8. Lower machine onto blocks or stands.

CAUTION: Prevent possible crushing injury from heavy component. Use appropriate lifting device.

9. Place appropriate lifting device under rear center of machine base and raise machine

Specification

320G—Operating Weight (approximate)..... 3246 kg
7150 lb

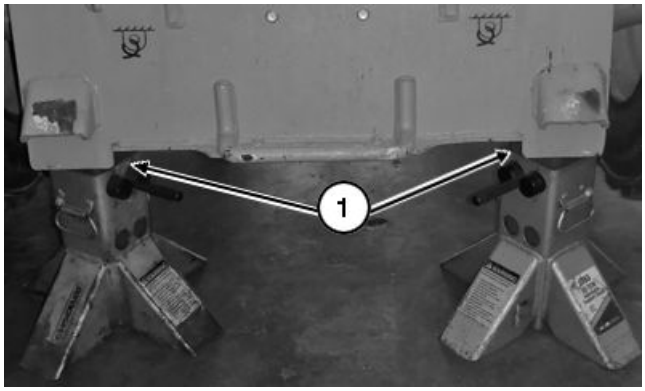

TX1144829A —UN—01OCT13

Front of Machine (boom raised for clarity)

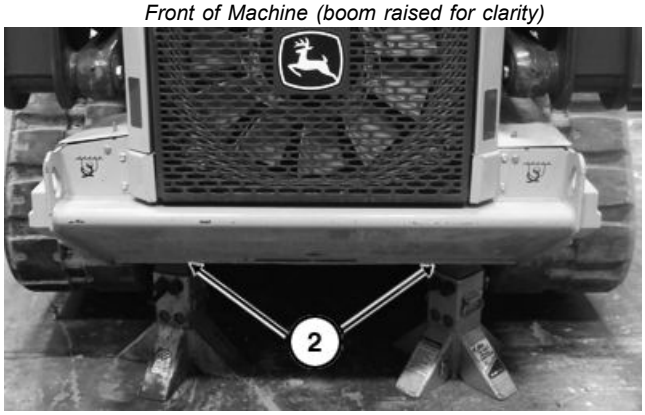

TX1124867 —UN—29OCT12

Rear of Machine (blocked)

1— Front Corner **2— Rear Corner**

324G—Operating Weight (approximate)..... 3495 kg
7700 lb

325G—Operating Weight (approximate)..... 4381 kg
9658 lb

10. Place blocks or stands under rear corners (2) of machine base.

CAUTION: Prevent possible injury from unexpected machine movement. Make sure that machine is stable after blocking.

11. Lower machine onto blocks or stands.

JK47244,0000368 -19-18JUN18-1/1

Raising Operator's Station

1. Park machine on level surface.
2. Remove any attachments.
3. Raise boom and lock in raised position. See Boom Lock. (Section 2-2.)
4. Engage park brake and stop engine.
5. Remove nuts (1) and washers (2) from mounting studs on both sides of operator's station.

CAUTION: Prevent crushing injury from unexpected cab movement. NEVER attempt to repair a damaged gas spring cylinder. Replace gas spring cylinder if cylinder is cracked, damaged, or if operator's station is hard to lift.

IMPORTANT: Prevent machine damage. Verify there is clearance between the operator's station as it is being raised and any antennas that may be installed on the top mainframe post. If any interference is observed, remove antennas before the operator's station is fully raised.

6. Using handholds, raise operator's station. Continue raising operator's station until gas spring cylinder locks are in place.
7. Pull forward on red cylinder lock (3) to ensure operator's station is in locked position.

NOTE: If machine is equipped with a pressurized cab, make sure that seal on back of footwell is in place prior to lowering cab.

8. To lower operator's station, push red cylinder lock (4) rearward to unlocked position.
9. Pull operator's station down until seated on mounting studs.
10. Install and tighten washers and nuts on mounting studs.

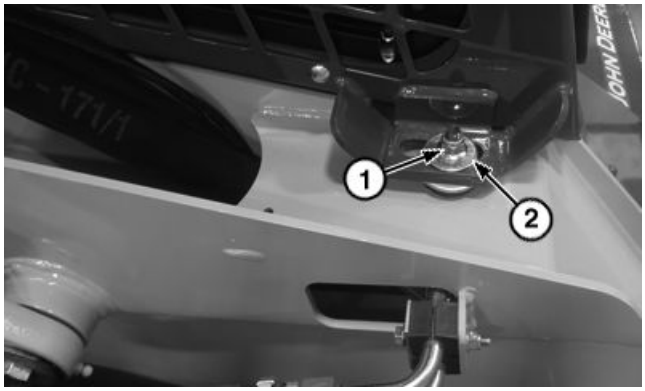

TX1127410 —UN—06DEC12

Operator's Station Mounting Hardware

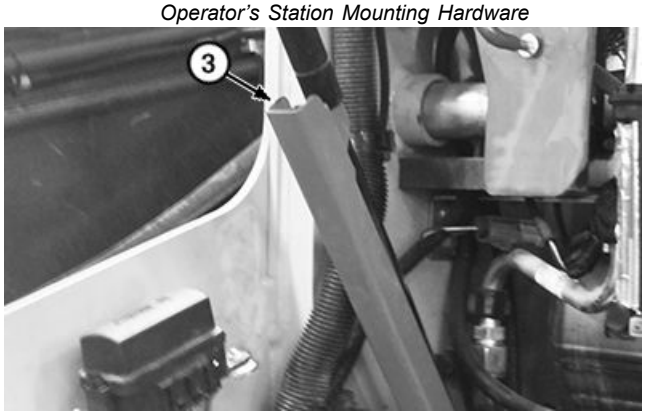

TX1216157 —UN—23MAY16

Cylinder Lock (locked position)

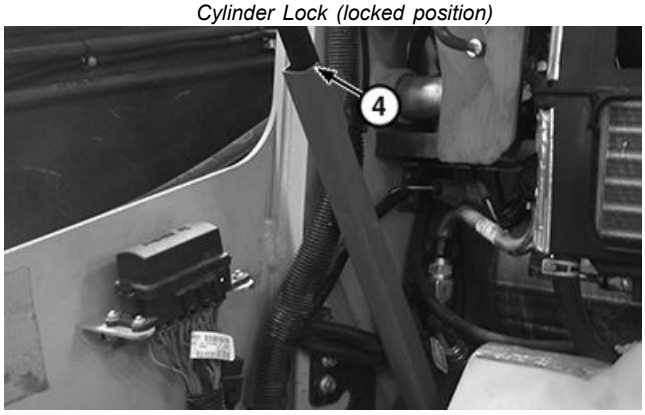

TX1216158 —UN—23MAY16

Cylinder Lock (unlocked position)

1— Nut (2 used)
2— Washer (2 used)
3— Cylinder Lock (locked position)
4— Cylinder Lock (unlocked position)

JB92884,000012F -19-13JAN21-1/1

Opening and Closing Engine Cover

Opening engine cover (3):

1. Park machine on a level surface.
2. Engage park brake and stop engine.
3. Hold handle (2) and press up on latch (1).

Closing engine cover:

1. Pull down on handle to close engine cover.
2. Ensure engine cover is securely latched.

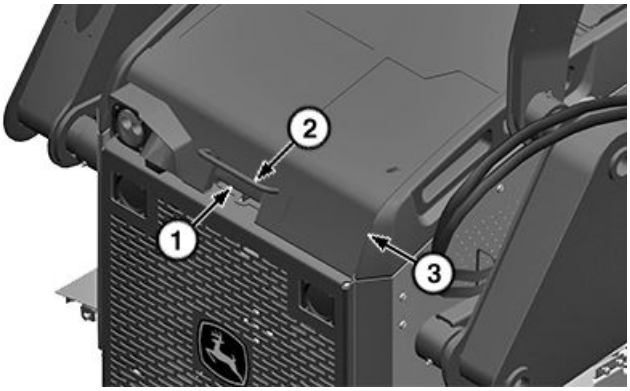

TX1250633A —UN—24JAN18

Engine Cover

1— Latch
2— Handle
3— Engine Cover

JS90457,0000222 -19-29JAN18-1/1

Engine Side Panels—Remove and Install

Removing engine side panels (3):

1. Park machine on a level surface.
2. Raise boom and lock in raised position. See Boom Lock. (Section 2-2.)
3. Open engine cover. See Opening and Closing Engine Cover in this section.
4. Place hand on grab handle hold (1) and place other hand on pocket handle (2). Tilt engine side panel (3) rearward and lift off.

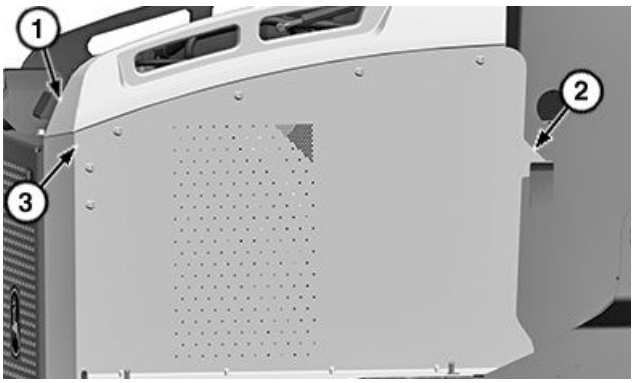

TX1250759A —UN—19JAN18

Engine Side Panel

1— Grab Handle Hold
2— Pocket Handle
3— Engine Side Panel (2 used, 1 per side)

Continued on next page

JS90457,0000223 -19-29JAN18-1/2

Installing engine side panels:

IMPORTANT: Avoid machine damage. Boom can contact engine side panel if not properly installed. Make sure all slots and tabs are properly aligned.

1. Align inside slot (4) and standoff (6) while guiding inside edge of engine side panel (5) into rear inside bracket (7).
2. Tilt engine side panel forward while guiding front tab (8) into upper front outer bracket (9) and front edge of engine side panel (10) into lower front outer bracket (11).
3. Close engine cover.

4— Inside Slot
5— Inside Edge of Engine Side Panel
6— Standoff
7— Rear Inside Bracket
8— Front Tab
9— Upper Front Outer Bracket
10— Front Edge of Engine Side Panel
11— Lower Front Outer Bracket

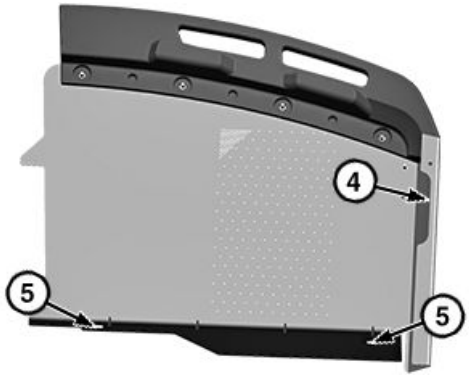

TX1250766A —UN—19JAN18

Inside of Engine Side Panel

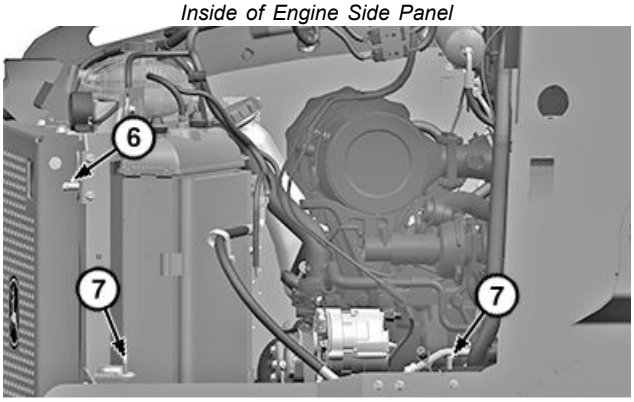

TX1250761A —UN—19JAN18

Standoff

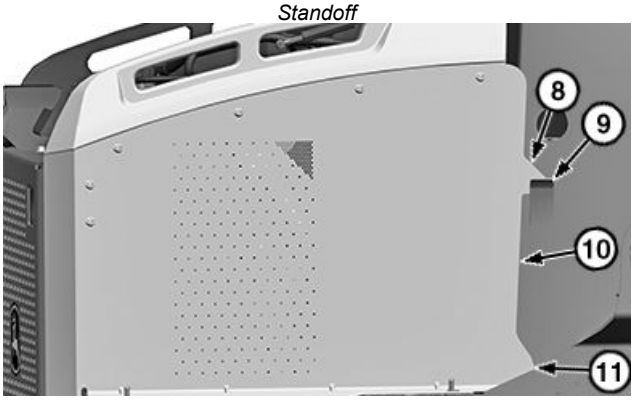

TX1250762A —UN—19JAN18

Engine Side Panel (boom removed for clarity)

JS90457,0000223 -19-29JAN18-2/2

Footwell Removal

1. Park machine on a level surface.
2. Remove any attachment.
3. Raise boom and lock in raised position. See Boom Lock. (Section 2-2.)
4. Engage park brake and stop engine.
5. Raise and lock operator's station. See Raising Operator's Station in this section.
6. Remove cap screws (1) from footwell (2).
7. Lift out footwell.

1— Cap Screw (6 used, 3 per side) **2— Footwell**

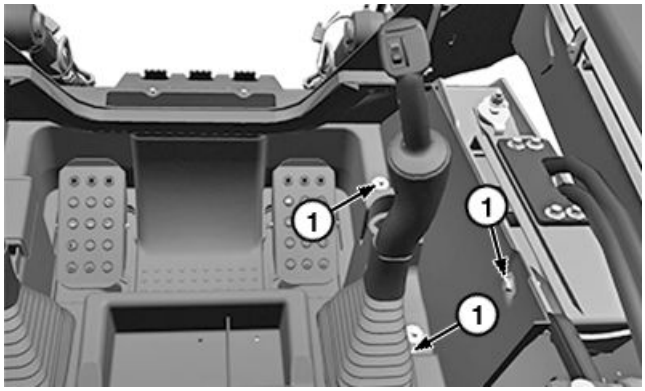

TX1250782A —UN—22JAN18

Footwell Cap Screws (right side show)

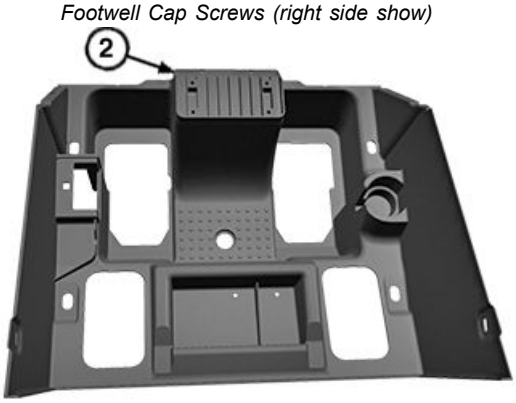

TX1250783A —UN—19JAN18

Footwell

JS90457,0000224 -19-29JAN18-1/1

Fluid Analysis Program Test Kits and 3-Way Coolant Test Kit

Fluid Analysis Program Test Kits and the 3-Way Coolant Test Kit are John Deere fluid sampling products to help you monitor machine maintenance and system condition. The objective of a fluid sampling program is to ensure machine availability when you need it and to reduce repair costs by identifying potential problems before they become critical.

Engine, hydraulic, power train, and coolant samples should be taken from each system on a periodic basis, before a filter or fluid change interval. Certain systems require more frequent sampling. Consult your John Deere dealer or other service provider on a maintenance program for your specific application. Your John Deere dealer or other service provider has the sampling products and expertise to assist you in lowering your overall operating costs through fluid sampling.

TX1003513A —UN—20FEB06

TX,ANALYSIS -19-29OCT24-1/1

Service Intervals

Model:	**PIN/Serial Number:**
Hour Meter Reading:	
SERVICE INTERVALS	
Service machine at intervals shown on this chart. Also, perform service on items at multiples of the original requirement. For example, at 500 hours also service those items (if applicable) listed under 250 hours, 50 hours, and 10 hours or daily.	
FLUID SAMPLING	
Fluid samples should be taken from each system at its recommended change interval prior to actually draining the fluid. Regular oil sampling will extend the operational life of machine.	
As Required	
□ Check accessory drive belt	□ Check fuel tank breather
□ Replace cab fresh air filter (if equipped)	□ Service exhaust filter
□ Replace cab recirculation air filter (if equipped)	□ Drain water and sediment from fuel tank
□ Check and clean cooling package	□ Check and drain primary fuel filter and water separator
□ Replace primary engine air filter element	□ Check and adjust steering mistracking
□ Replace secondary engine air filter element (every 3rd primary element replacement or as required)	□ Clean and tighten battery terminals
Every 10 Hours or Daily	
□ Check coolant level	□ Check hydraulic oil level
□ Check engine oil level	□ Lubricate boom linkage, cylinder pivot points, and Quik-Tatch™ linkage
Initial Service—50 Hours[1]	
□ Drain and refill hydrostatic planetary gear case oil	
Every 50 Hours	
□ Check and clean dust unloader valve	□ Check track tension
Every 250 Hours	
□ Take engine oil sample	
Every 500 Hours	
□ Drain and refill engine oil and replace oil filter	□ Take hydrostatic planetary gear case oil sample
□ Replace primary fuel filter and water separator	□ Take hydraulic oil sample
□ Replace final fuel filter	□ Take diesel fuel sample
□ Replace hydraulic oil filter	□ Take engine coolant sample
Every 1000 Hours	
□ Drain and refill hydraulic oil	□ Replace fuel tank breather
□ Drain and refill hydrostatic planetary gear case oil	□ Check coolant condition
□ Replace hydraulic oil reservoir breather	

Continued on next page

DB84312,0000248 -19-31MAR20-1/2

Every 1500 Hours
□ Check and adjust engine valve lash
Every 6000 Hours
□ Drain and refill cooling system
[1]*Perform initial service once after the first 50 hours of operation.*

Quik-Tatch is a trademark of Deere & Company

DB84312,0000248 -19-31MAR20-2/2

Required Parts

REQUIRED PARTS						
Ensure machine performance and availability; use only genuine John Deere parts. Verify part numbers are current and that any associated parts are also on hand, i.e., filter O-rings.						
Description	**Initial Service —50 Hours[1]**	**Every 250 Hours**	**Every 500 Hours**	**Every 1000 Hours**	**Every 1500 Hours**	**Every 6000 Hours**
Engine Oil Filter			1[4]	1[5]	1	1
Final Fuel Filter			1[4]	1[5]	1	1
Primary Fuel Filter and Water Separator			1[4]	1[5]	1	1
Hydraulic Oil Filter			1[4]	1[5]	1	1
Hydraulic Oil Reservoir Breather				1[5]		1
Filter Pak 500 Hours[4]			1			
Filter Pak 1000 Hours[5]				1		
Fuel Tank Breather				2[5]		2
Engine Rocker Arm Cover Gasket					1	1
Diesel Particulate Filter (component of exhaust filter)	As Required					
Cab Fresh Air Filter Element (if equipped)	As Required					
Cab Recirculation Air Filter Element (if equipped)	As Required					
Engine Air Filter Element—Primary	As Required[5]					
Engine Air Filter Element—Secondary	As Required[5]					
Dust Unloader Valve	As Required					
John Deere Plus-50™ II Engine Oil[2]			12.5 L (3.3 gal)	12.5 L (3.3 gal)	12.5 L (3.3 gal)	12.5 L (3.3 gal)
John Deere Hydrau™ Hydraulic and Hydrostatic Oil[2]				26.5 L (7.0 gal)		26.5 L (7.0 gal)
API G1-5 Final Drive Planetary Oil[2] (per side)	0.8 L (27.0 fl oz)			0.8 L (27.0 fl oz)		0.8 L (27.0 fl oz)
John Deere Cool-Gard™ II Pre-Mix						12.5 L (3.3 gal)
Fluid Analysis Kits[3]						
Diesel Engine Oil		1	1	1	1	1
Hydraulic Oil			1	1	1	1
Hydrostatic Planetary Gear Case Oil			2	2	2	2
Diesel Fuel			1	1	1	1
Engine Coolant			1	1	1	1

[1] *Perform initial service once after the first 50 hours of operation.*
[2] *For recommended oil type and oil viscosities based on operating temperatures, see Maintenance—Machine. (Section 3-1.)*
[3] *Based on fluid analysis results, intervals may need to be adjusted for operating conditions. Consult an authorized John Deere dealer.*
[4] Included in 500 hours filter pak.
[5] Included in 1000 hours filter pak.

Plus-50 is a trademark of Deere & Company
Hydrau is a trademark of Deere & Company
Cool-Gard is a trademark of Deere & Company

DB84312,000024A -19-28JUN23-1/1

Maintenance Legend

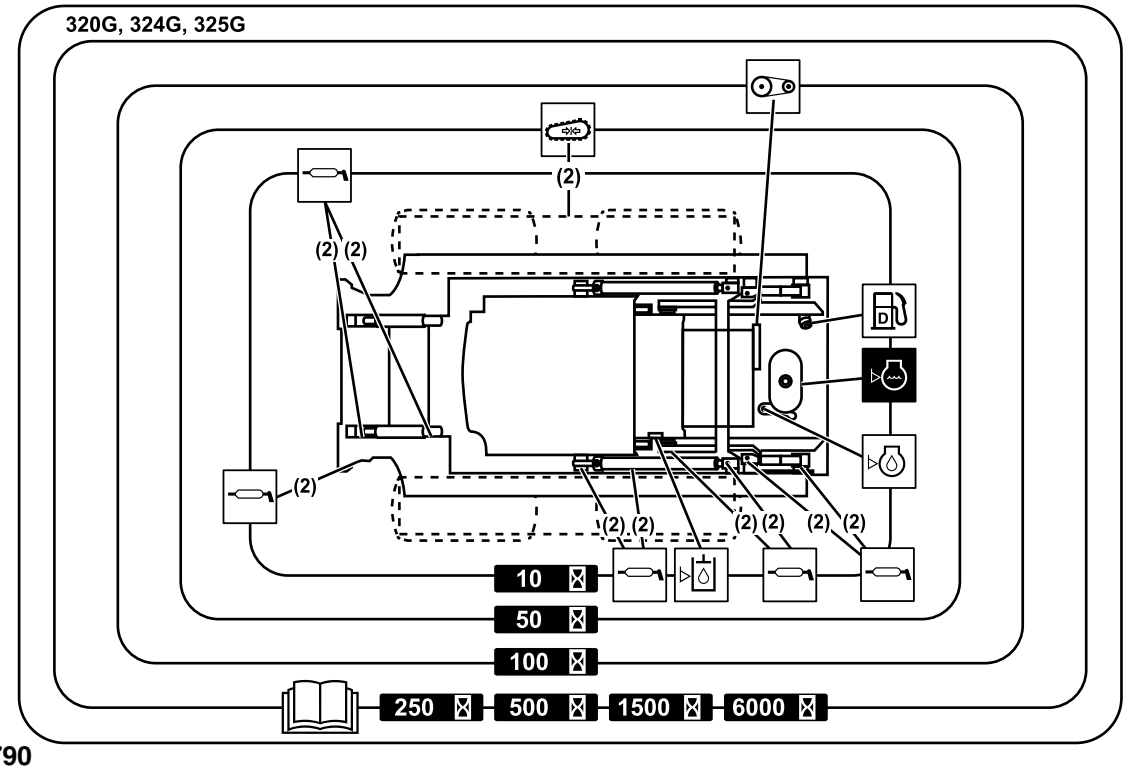

Maintenance Legend Chart

TX1250790 —UN—23JAN18

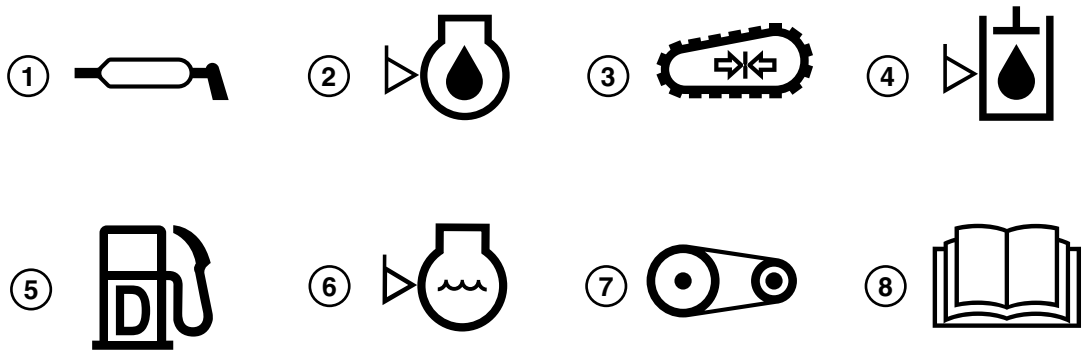

Maintenance Icons

TX1144348 —UN—20SEP13

1— Lubrication Point
2— Check Engine Oil Level (yellow)
3— Check Track Tension
4— Check Hydraulic Oil Level (orange)
5— Fuel Sulfur/Engine Oil (green) For more information, see table in Engine Oil and Filter Service Intervals. (Section 3-1.)
6— Check Engine Coolant Level (blue)
7— Adjust Belt Tension
8— Consult Operator's Manual

NOTE: The maintenance schedule decal is to be used as quick guide for preventative maintenance checks and service intervals. It is not intended to replace the operator's manual for scheduled maintenance and inspections.

Continued on next page

JS90457,0000225 -19-18JAN18-1/2

The maintenance schedule decal consists of “tracks” located around an outline of a machine. Each “track” represents an interval at which a maintenance inspection or procedure is performed. Specific maintenance icons are located on each “track,” indicating which inspection or procedure is performed. For certain intervals, the see operator’s manual icon (8) is shown, this indicates it is necessary to reference the operator’s manual for specific information regarding maintenance inspections or procedures.

JS90457,0000225 -19-18JAN18-2/2

Check and Clean Cooling Package

Check radiator (3), hydraulic oil cooler (5), and air conditioner condenser (if equipped) (1) for dirt, damage, leaks, and loose or broken mounting hardware.

1. Remove any attachment.

CAUTION: Prevent personal injury. Allow engine to cool enough so that components can be touched with bare hands.

2. Park machine on a level surface.
3. Raise boom and lock in raised position. See Boom Lock. (Section 2-2.)
4. Open engine cover. See Opening and Closing Engine Cover. (Section 3-2.)
5. Remove engine side panels. See Engine Side Panels—Remove and Install. (Section 3-2.)
6. On right side of machine, remove pin (2).
7. Swing bracket (4) and air conditioner condenser toward front of machine.
8. Clean air conditioner condenser and radiator fins using compressed air.
9. Close air conditioner condenser and bracket. Install pin.
10. On left side of machine, clean hydraulic oil cooler using compressed air.
11. Clean any dirt buildup in engine area.
12. If any areas require washing after cleaning with air, allow radiator and cooler parts to dry thoroughly before operating machine.
13. Install engine side panels and close engine cover.
14. Lower boom.

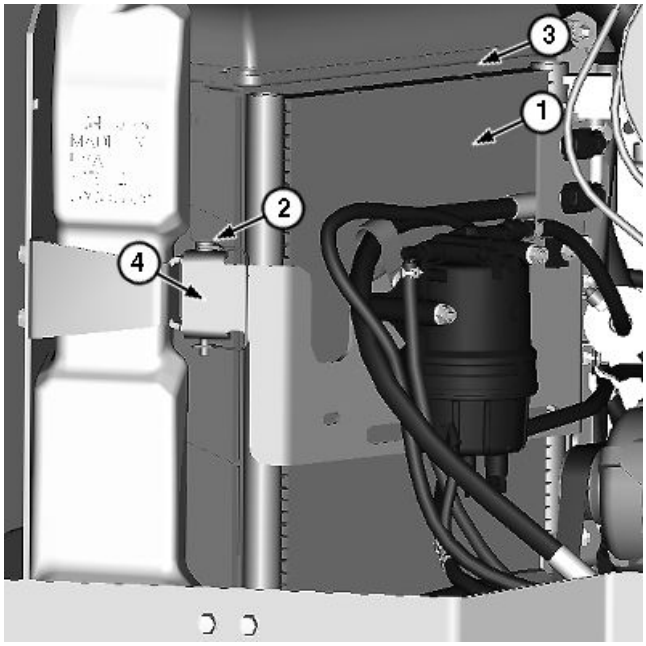

TX1143770 —UN—16SEP13

Radiator and Air Conditioning Condenser

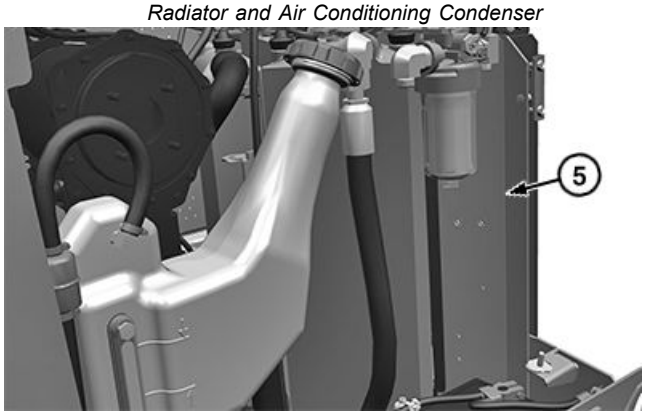

TX1252095A —UN—14FEB18

Hydraulic Oil Cooler

1— Air Conditioner Condenser (if equipped)
2— Pin
3— Radiator
4— Bracket
5— Hydraulic Oil Cooler

JS90457,0000214 -19-14FEB18-1/1

Replace Cab Fresh Air and Recirculation Air Filters—If Equipped

NOTE: Air filters require periodic checking when running in dirty conditions.

1. Park machine on level surface.
2. Engage park brake and stop engine.
3. Remove knobs (1) from cover, located behind operator's seat.
4. Remove cover (2).
5. Remove cab fresh air filter (3) and recirculation air filter (4).
6. Inspect filters for debris or damage, replace if necessary.
7. Install filters.
8. Install cover and knobs.

1— Knob (2 used)
2— Cover
3— Cab Fresh Air Filter
4— Recirculation Air Filter

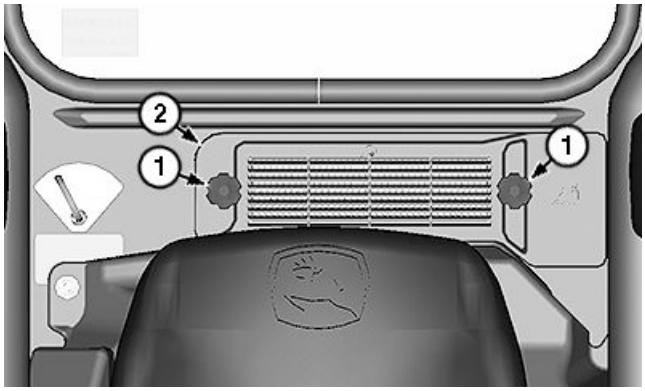

TX1166848A —UN—23JUL14

Air Filter Guard

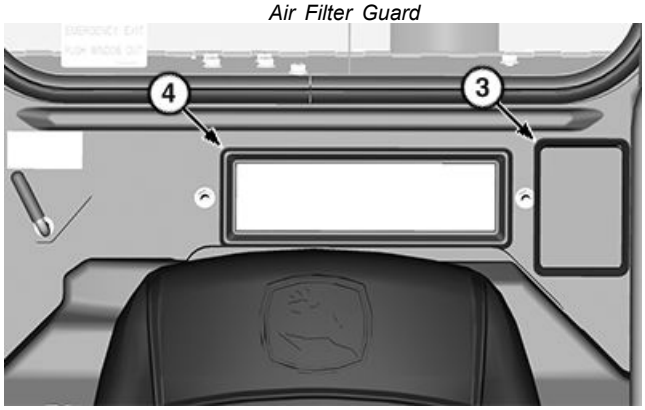

TX1216434 —UN—26MAY16

Cab Fresh Air and Recirculation Air Filters

JB92884,0000133 -19-15JUN16-1/1

Check Fuel Tank Breather

1. Park machine on level surface.
2. Engage park brake and stop engine.

IMPORTANT: Prevent possible engine damage. Replace fuel tank breather if damaged.

3. Raise and lock operator's station. See Raising Operator's Station in this section.
4. Inspect fuel tank breather filter (1). Replace if dirty or damaged. See Replace Fuel Tank Breather. (Section 3-9.)
5. Lower operator's station.

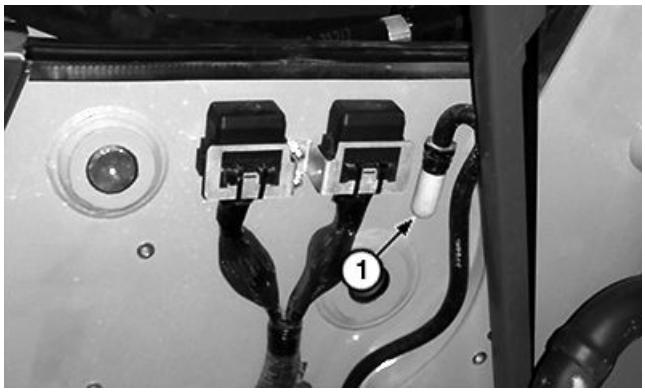

TX1252138A —UN—08FEB18

Fuel Tank Breather Filter

1— Fuel Tank Breather Filter

JS90457,0000256 -19-15FEB18-1/1

Replace Primary and Secondary Engine Air Filter Elements

IMPORTANT: Prevent possible engine damage. Do not clean primary engine air filter. Replace filter when air restriction light is illuminated on engagement and monitor unit (EMU). To prevent dirt from being sucked into engine, do not remove filter when engine is running.

Do not start engine without both primary and secondary filters installed.

1. Park machine on level surface.
2. Raise boom and lock in raised position. See Boom Lock. (Section 2-2.)
3. Engage park brake and stop engine.
4. Open engine cover. See Opening and Closing Engine Cover. (Section 3-2.)

NOTE: On turbocharged engines, air filters are serviced from left side of machine. On naturally-aspirated engines, air filters are serviced from right side of machine.

5. Remove right engine side panel. See Engine Side Panels—Remove and Install. (Section 3-2.)
6. Squeeze dust unloader valve (2) to remove dust from air cleaner.
7. Replace dust unloader valve if worn or damaged.
8. Unlatch service cover latches (1) and remove service cover.
9. To remove primary filter (3), gently move end of filter back and forth to break seal.
10. Gently pull filter out of housing and discard. Avoid dislodging contaminant from filter or knocking filter against housing.

NOTE: Secondary air filter should only be removed at every third primary filter replacement or if visual inspection indicates immediate attention is required.

11. Remove secondary filter (4) by pulling straight out. Replace secondary filter if dirty or damaged.

IMPORTANT: DO NOT use compressed air to clean debris from air cleaner housing. Debris can enter engine, causing internal engine damage.

12. Clean air filter housing.
13. Install secondary filter by pressing filter firmly in place until seated. When properly fitted, secondary filter should fit tightly inside outlet tube.
14. Install new primary filter by gently sliding filter over secondary filter (4) and pressing primary filter in place until fully seated. When installing, apply pressure by hand at outer rim of filter to complete a tight seal.

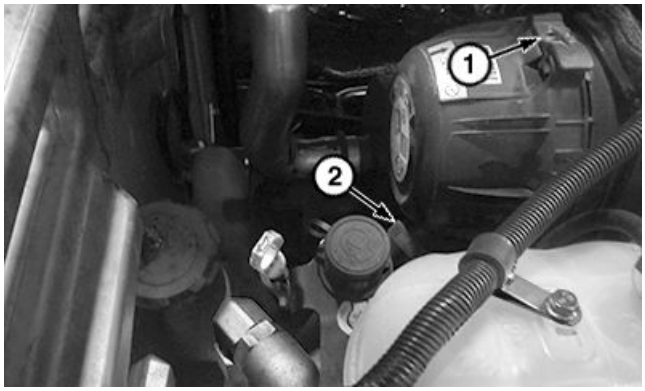

TX1252055A —UN—07FEB18

Service Cover Latch and Dust Unloader Valve

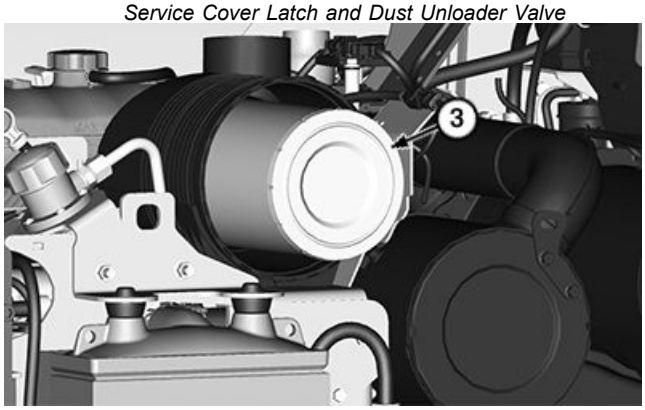

TX1216462 —UN—26MAY16

Primary Filter

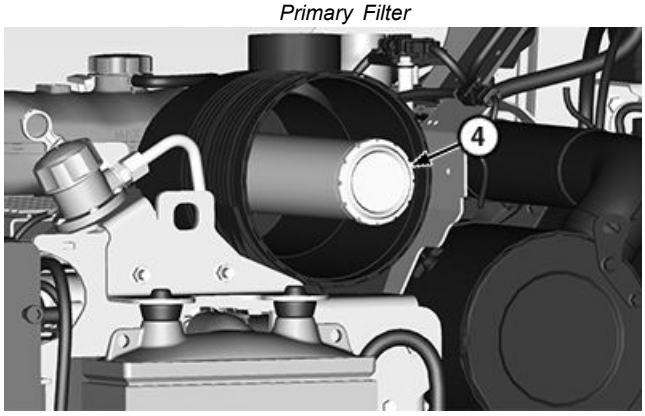

TX1216463 —UN—26MAY16

Secondary Filter

1— Service Cover Latch
2— Dust Unloader Valve
3— Primary Filter
4— Secondary Filter

Continue pushing filter into outlet tube until filter stops. The critical sealing area will compress slightly, adjust itself, and distribute sealing pressure evenly.

IMPORTANT: Prevent possible engine damage. If service cover does not fit flush to air filter housing, primary filter is not properly seated in housing.

15. Replace service cover with INLET arrow lined up with air cleaner inlet. Do not force service cover onto air cleaner or use service cover to push filter into place.
16. Fasten latches to secure service cover.

Continued on next page

JS90457,000023E -19-08FEB18-1/2

17. Inspect and torque all clamps, cap screws, and connections in the entire air intake system. Check for holes in piping and repair if needed.
18. Start engine and check monitor for air filter restriction indicator to verify there is no restriction.
    - If air restriction indicator still shows restriction, replace secondary filter.
19. Install right engine side panel and close engine cover.

JS90457,000023E -19-08FEB18-2/2

Check and Drain Primary Fuel Filter and Water Separator

1. Park machine on level surface.
2. Raise boom and lock in raised position. See Boom Lock. (Section 2-2.)
3. Engage park brake and stop engine.
4. Open engine cover. See Opening and Closing Engine Cover. (Section 3-2.)
5. Remove right engine side panel. See Engine Side Panels—Remove and Install. (Section 3-2.)
6. Place suitable container under drain valve (2) of primary fuel filter and water separator (1).
7. Turn fuel shutoff valve (3) to OFF position.
8. Loosen drain valve to drain water and sediment into container. Dispose of waste properly.
9. Tighten drain valve.
10. Turn fuel shutoff valve to ON position.
11. Operate engine and check for leaks.

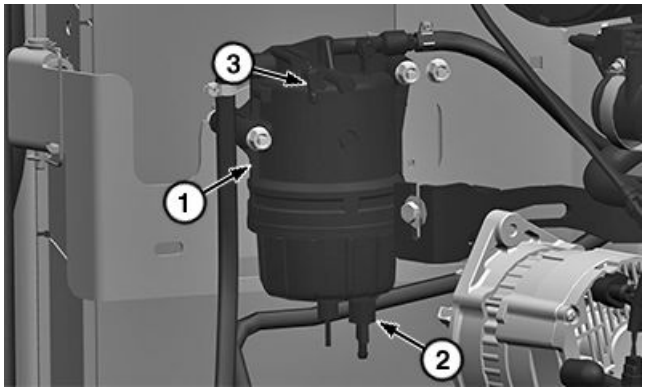

TX1252144A —UN—08FEB18

Primary Fuel Filter and Water Separator

1— Primary Fuel Filter and Water Separator
2— Drain Valve
3— Fuel Shutoff Valve

12. Install right engine side panel and close engine cover.
13. Lower boom.

JS90457,0000240 -19-09FEB18-1/1

Drain Water and Sediment From Fuel Tank

1. Park machine on a level surface.
2. Engage park brake and stop engine.
3. Raise and block machine. See Raising and Blocking Machine. (Section 3-2.)
4. Remove cap screws (2) and service panel (1) from under machine.
5. Place a suitable container under drain valve (3) of fuel tank.
6. Loosen drain valve. Drain water and sediment into a suitable container until clean fuel emerges. Dispose of waste properly.
7. Close drain valve.
8. Install service panel and cap screws.

1— Service Panel
2— Cap Screw (5 used)
3— Drain Valve

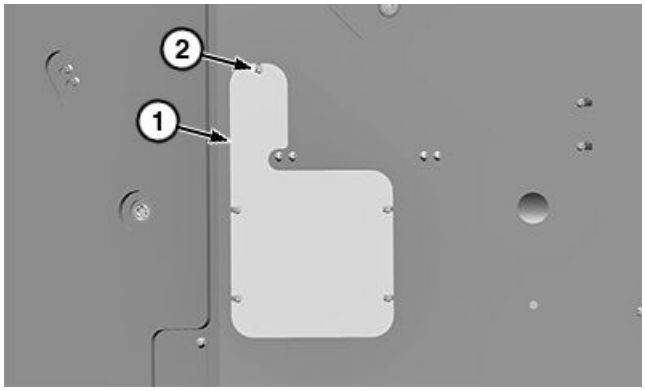

Service Panel (shown under machine)

TX1252145A —UN—08FEB18

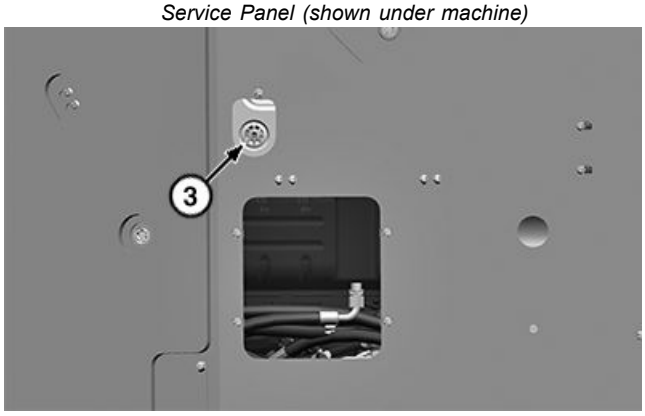

Fuel Tank Drain Valve

TX1252147A —UN—08FEB18

JS90457,0000241 -19-09FEB18-1/1

Check Accessory Drive Belt

Check accessory drive belt (1) regularly for wear, especially for cracks at the bottom of grooves and for frayed edges. If necessary, replace belt. See Replacing Accessory Drive Belt. (Section 4-1.)

1— Accessory Drive Belt

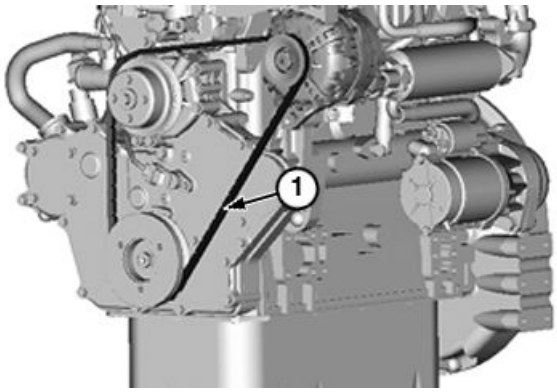

Without Air Conditioning

TX1140237 —UN—10JUL13

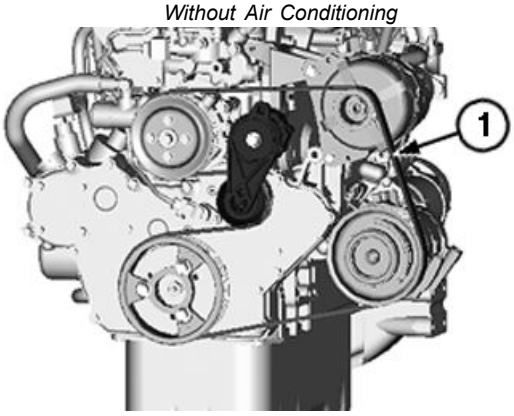

With Air Conditioning

TX1142384 —UN—15AUG13

JK47244,00001A1 -19-15AUG13-1/1

Service Exhaust Filter

CAUTION: Under federal, state, and/or local laws or regulations, exhaust filter ash may be classified as a hazardous waste. Hazardous waste must be disposed of in accordance with all applicable federal, state, and local laws or regulations governing hazardous waste disposal. Only a qualified service provider should remove ash from the exhaust filter. See an authorized dealer for exhaust filter ash handling and disposal.

The exhaust filter (1) is designed to retain residual ash, which is a noncombustible result of additives used in crankcase lubrication oils and the fuel. As ash levels rise, the capacity for soot storage is reduced. Engine performance can be reduced due to increased exhaust system back pressure. The residual ash must be removed from the filter. Ash removal is performed by removing the exhaust filter from machine and having it cleaned by specialized equipment or replacing the exhaust filter.

Do **NOT** attempt to remove exhaust filter from machine. **Contact an authorized dealer to remove exhaust filter for ash removal or replacement.**

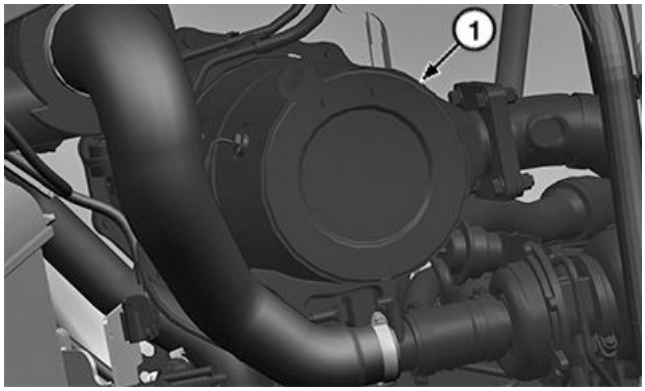

TX1252148A —UN—08FEB18

Exhaust Filter

1— Exhaust Filter

Failure to follow the approved ash removal methods may violate U.S. federal, state, and local hazardous waste laws, along with damage to the exhaust filter, resulting in potential denial of the emissions warranty.

JS90457,0000242 -19-09FEB18-1/1

Check and Adjust Steering Mistracking

Manual tracking adjustment (MTA) allows for the fine adjustment of higher speed tracking so the machine travels in a straighter path when the travel function is not commanding a steer. Using MTA can help compensate for machine variations, such as differences in tire size from side-to-side or uneven tire inflation, beyond what can be done using hydrostatic system calibration.

Check steering mistracking. See Operational Checkout, Steering Mistracking Check. (Section 4-2.)

JB92884,0000153 -19-13JUN16-1/1

Clean and Tighten Battery Terminals

CAUTION: Battery gas can explode. Keep sparks and flames away from batteries. Always remove grounded (-) battery clamp first and replace it last.

1. Disconnect battery clamps, grounded clamp first.
2. Clean terminal (A) and clamp with a stiff brush.
3. Apply lubricating grease (B) where battery terminal meets top of battery case to prevent grease from escaping.
4. Install and tighten clamps, grounded clamp last.

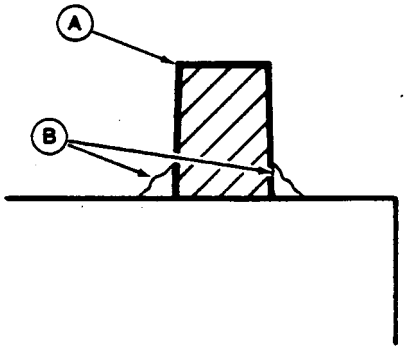

T6758AA —UN—21OCT88

Battery Terminal

A—Terminal **B—Lubricating Grease**

TX,55,FF765 -19-30NOV16-1/1

Check Engine Oil Level

IMPORTANT: Prevent engine damage. DO NOT run engine when oil level is below the ADD mark.

Engine oil may appear milky in color due to machine being equipped with closed crankcase ventilation system, which may cause moisture on engine oil dipstick (1) and fill cap (2).

If engine oil appears milky in color, check engine coolant level to verify engine coolant has not entered the engine oil system. See Check Coolant Level in this section.

If there is still concern after checking engine coolant level, take an engine oil sample for further analysis. See Take Engine Oil Sample. (Section 3-7.)

The most accurate oil level reading is obtained when the engine is cold before starting the engine for the day's operation.

1. Open engine cover. See Opening and Closing Engine Cover. (Section 3-2.)
2. Make sure dipstick (1) is fully seated.
3. Remove dipstick to check oil level.

   BEFORE THE ENGINE IS STARTED: The engine is full when oil level is in the cross-hatch area. Running the engine when the oil level is above the ADD mark is acceptable.

   AFTER THE ENGINE HAS BEEN RUN: Allow the oil to drain into the oil pan for 10 minutes before checking the oil level. Ten minutes after shutdown, the engine oil level must be above the ADD mark.
4. If necessary, remove fill tube cap (2) to add oil. For recommended oil, see Maintenance—Machine. (Section 3-1.)
5. Close engine cover.

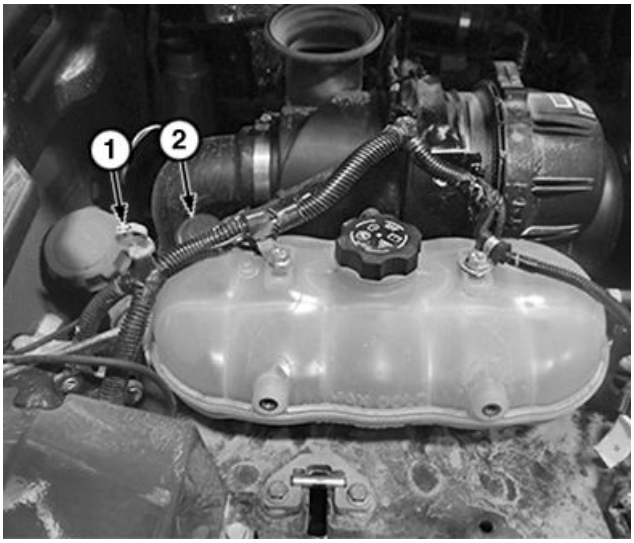

TX1250203A —UN—12JAN18

Engine Oil Dipstick and Fill Tube Cap

1— Dipstick **2— Fill Tube Cap**

JS90457,0000255 -19-14FEB18-1/1

Check Hydraulic Oil Level

IMPORTANT: To ensure an accurate reading, park machine on smooth, level ground. Check level only when hydraulic oil is cold and boom is down with boom and bucket cylinders fully retracted.

When adding oil to the hydraulic reservoir, be careful not to get dirt into reservoir or oil.

Do not overfill hydraulic oil reservoir. An overfilled hydraulic oil reservoir will not allow for oil expansion, which may result in oil leakage past hydraulic reservoir breather or fill cap.

1. Park machine on a level surface.
2. Engage park brake and stop engine.
3. Check oil level at hydraulic reservoir oil level gauge (1) on left side of machine. Hydraulic oil level should be between the arrow marks (2) on gauge.

If adding oil is necessary:

1. Open engine cover. See Opening and Closing Engine Cover. (Section 3-2.)
2. Remove hydraulic reservoir fill cap (3).
3. Add hydraulic oil. For recommended oil, see Hydraulic and Hydrostatic Oil. (Section 3-1.)
4. Install hydraulic reservoir fill cap.
5. Close engine cover.

1— Hydraulic Reservoir Oil Level Gauge
2— Arrow Mark (2 used)
3— Hydraulic Reservoir Fill Cap

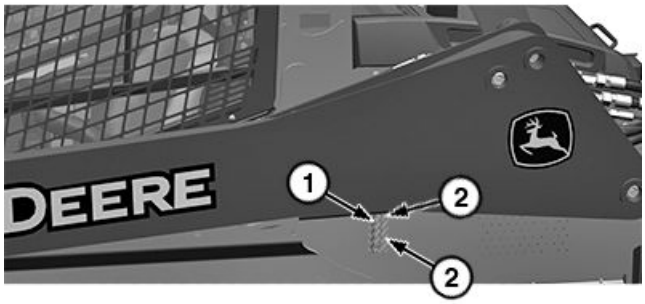

TX1251569A —UN—31JAN18

Hydraulic Oil Level Gauge

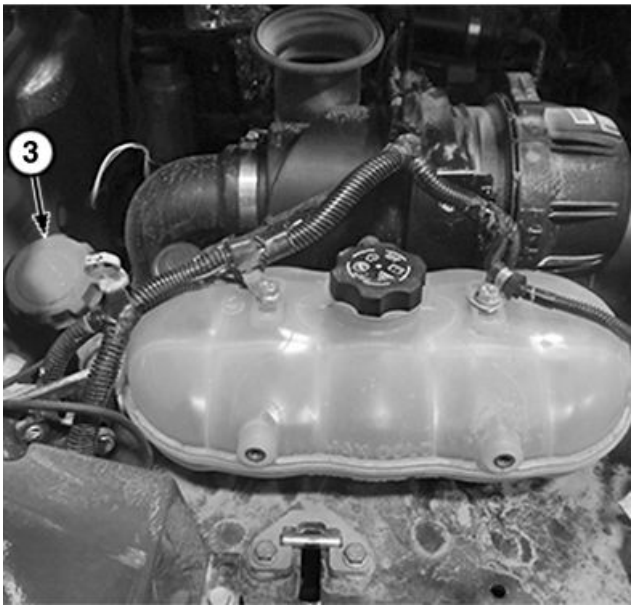

TX1250206A —UN—12JAN18

Hydraulic Reservoir Fill Cap

JS90457,0000219 -19-31JAN18-1/1

Check Coolant Level

CAUTION: Prevent possible injury from hot, spraying fluids. Shut off engine. Remove filler cap only when cool enough to touch with bare hands. Slowly loosen cap to relieve pressure before removing completely.

1. Park machine on a level surface.
2. Allow engine to cool.
3. Open engine cover. See Opening and Closing Engine Cover. (Section 3-2.)
4. Check surge tank (2) for coolant level. Coolant should be above the MIN COLD line (4) but below the MAX COLD line (3).
5. If coolant is below the MIN COLD line, add coolant to surge tank. For recommended coolant, see Diesel Engine Coolant (engine without wet sleeve cylinder liners). (Section 3-1.)
6. Close engine cover and run engine.

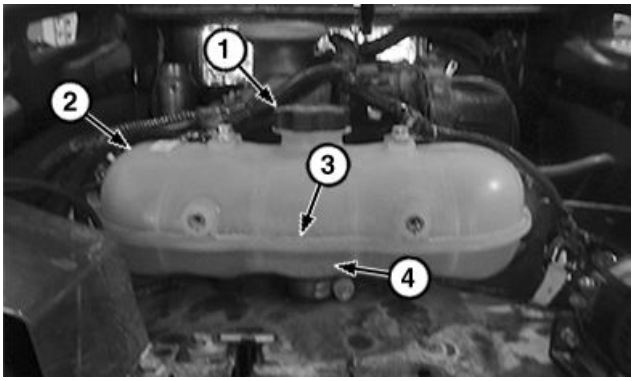

TX1250189A —UN—12JAN18

Surge Tank

1— Surge Tank Cap
2— Surge Tank
3— MAX COLD Line
4— MIN COLD Line

7. Stop engine. Allow engine to cool and check coolant level again.
8. If level is still low, repeat procedure.

JS90457,000021A -19-29JAN18-1/1

Lubricate Boom Linkage, Cylinder Pivot Points, and Quik-Tatch™ Linkage

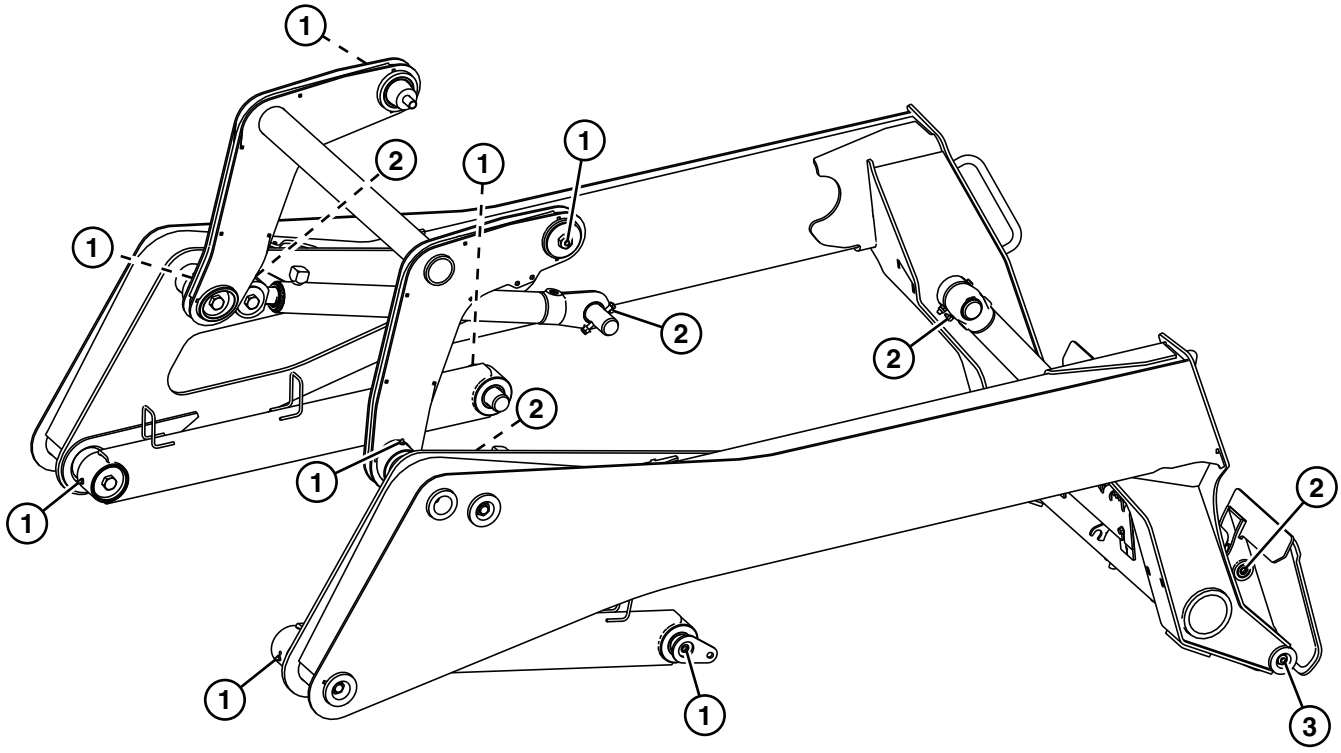

TX1146080

Boom Linkage, Cylinder, Pivot Points, and Quik-Tatch™Linkage Lubrication Points

1— Boom Linkage Point (8 used) **2— Cylinder Pivot Point (8 used)** **3— Quik-Tatch™ Linkage Point (2 used)**

NOTE: In severe operating conditions, Quik-Tatch™ linkage points (3) may need more frequent lubrication.

Lubricate boom linkage points (1), cylinder pivot points (2), and Quik-Tatch™ linkage points (3) on each side of boom with 1—2 shots of grease. For recommended grease, see Grease. (Section 3-1.)

Quik-Tatch is a trademark of Deere & Company

JK47244,00002EE -19-24OCT13-1/1

Drain and Refill Hydrostatic Planetary Gear Case Oil

1. Park machine on a level surface with drain plug (2) at bottom of gear case.
2. Stop engine.

CAUTION: High-pressure release of fluids from a pressurized system can cause serious burns. Wait for hydrostatic planetary gear case oil to cool. Keep body and face away from check plug (1). Gradually loosen fill plug (3) to release pressure.

3. Allow machine to cool. Slowly loosen fill plug (3) to release pressure.
4. Remove drain plug. Allow oil to drain into a container. Dispose of waste properly.
5. Install drain plug.
6. Remove fill plug.
7. Remove check plug (1).
8. Add oil to fill plug hole until oil flows out of check plug hole. For recommended oil, see Maintenance—Machine. (Section 3-1.)

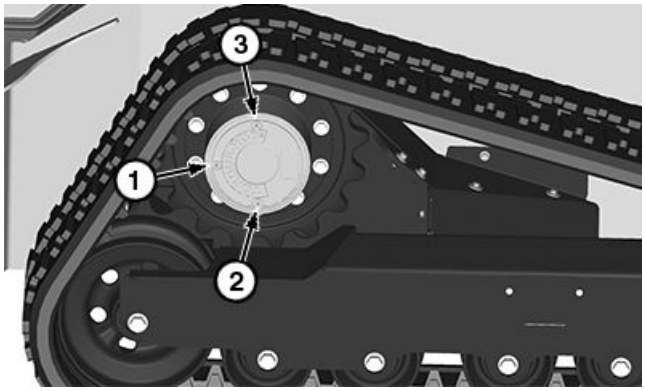

TX1244568 —UN—13SEP17

Hydrostatic Planetary Gear Case

1— Check Plug
2— Drain Plug
3— Fill Plug

Specification

Hydrostatic Planetary Gear Case Oil—Capacity (per side)	0.80 L 27.0 fl oz

9. Install check and fill plugs.

DB84312,000023E -19-13FEB18-1/1

Check and Clean Dust Unloader Valve

IMPORTANT: Avoid machine damage. A missing, damaged, or hardened dust unloader valve will make the dust cup precleaner ineffective, causing very short element life. Valve should close when engine is running.

NOTE: If operating in high dust conditions, squeeze dust unloader valve every 2 hours of operation to release dust.

1. Park machine on level surface.
2. Open engine cover to access dust unloader valve (1).
3. Squeeze dust unloader valve to remove dust from the air cleaner.
4. Check condition of dust unloader valve. Replace if hardened or damaged.
5. Close engine cover.

1— Dust Unloader Valve

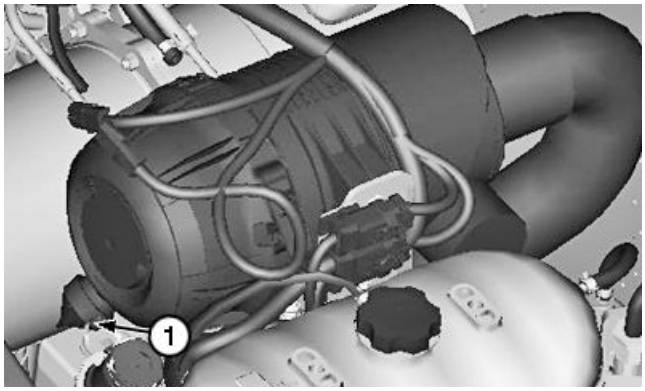

TX1139640 —UN—09SEP13

Dust Unloader Valve—Turbocharged Engine (4TNV98CT engine shown, 4TNV98T engine similar)

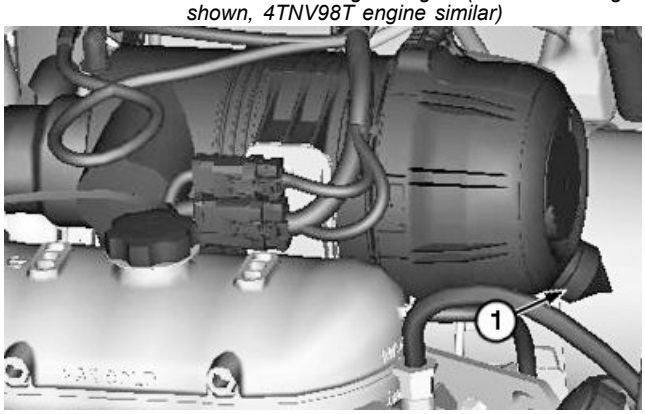

TX1139638 —UN—09SEP13

Dust Unloader Valve—Naturally-Aspirated Engine (4TNV98C engine shown)

JK47244,00002EF -19-14JAN15-1/1

Check Track Tension

Park Brake Switch—Key Start

TX1125062 —UN—31OCT12

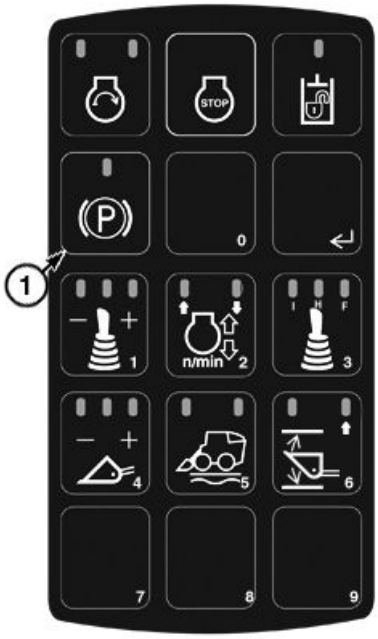

Sealed Switch Module (SSM)

TX1237172 —UN—12APR17

1— Park Brake Switch **3— Distance**

IMPORTANT: Avoid track damage. Track sag measurement can only be performed safely and accurately by dumping bucket and lowering boom to raise machine to proper height. DO NOT use a broken or worn out bucket when checking or adjusting track sag.

1. Install bucket attachment on machine. Visually check pin engagement with Quik-Tatch™ to ensure locking.
2. Park machine on a level surface.
3. Raise boom.
4. Extend bucket cylinders to place bucket in full dump position.
5. Lower boom to lowest position to raise front of machine off the ground by 20 cm (8 in) and allow operator to exit machine if necessary.
6. Engage park brake. Press park brake switch (1) to engage park brake.
7. Turn engine off.

CAUTION: Prevent injury due to unexpected machine movement during servicing. Be alert to possible machine movement caused by hydraulic leakage. If hydraulics drift, see an authorized John Deere dealer.

8. From seat, verify machine is stable and front end is still raised.

CAUTION: Avoid possible injury from falls or slips. Use care when entering and exiting machine with front end raised. Maintain three point contact. DO NOT use bucket as foothold when machine is in raised position.

9. Exit machine using handholds and top of track for assistance.

Quik-Tatch is a trademark of Deere & Company

Continued on next page

DB84312,000023F -19-09FEB18-1/2

NOTE: If gravel or mud is packed between sprocket and track, gravel and mud must be removed before adjusting track.

10. Measure distance (3) from bottom of third roller from rear of machine to top of track. The bottom of the rollers should not be touching the track.

Specification

Track—Sag.....25—38 mm
1.00—1.50 in

CAUTION: Prevent personal injury. High-pressure grease is in track adjuster cylinder. Do not loosen track adjuster valve (5) quickly or too much. Never loosen grease fitting (4) to release grease.

IMPORTANT: Prevent possible damage to track components. Do not use the grease fitting on track adjuster cylinder for lubrication. Use grease fitting only for track sag adjustment.

11. If track sag is not within specification, remove track adjuster cover plate on track frame.
12. To decrease track sag, add grease to track adjuster cylinder through grease fitting (4).

    To increase track sag, loosen track adjuster valve (5) 1—2 turns to release grease from track adjuster cylinder.

    Tighten track adjuster valve when track sag is correct.

Specification

Track—Sag.....25—38 mm
1.00—1.50 in

13. Install track adjuster cover plate on track frame.
14. Repeat procedure for other track.

CAUTION: Avoid possible injury from falls or slips. Use care when entering and exiting machine with front end raised. Maintain three point contact. DO NOT use bucket as foothold when machine is in raised position.

15. Enter machine using top of track and handholds on machine for assistance.
16. Start machine and raise boom to lower front end.

TX1140301A —UN—09SEP13

Track Sag Measurement

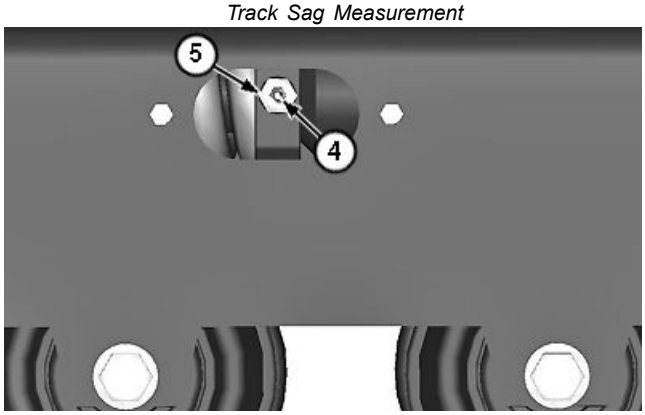

TX1143842 —UN—11SEP13

Track Adjuster

3— Distance
4— Grease Fitting
5— Adjuster Valve

DB84312,000023F -19-09FEB18-2/2

Take Engine Oil Sample

See an authorized John Deere dealer for procedures and sampling equipment.

JG33441,000012E -19-30MAR17-1/1

Drain and Refill Engine Oil and Replace Filter

NOTE: Engine oil may appear milky in color due to machine being equipped with closed crankcase ventilation system, which may cause moisture on engine oil dipstick and fill cap.

If engine oil appears milky in color, check engine coolant level to verify engine coolant has not entered the engine oil system. See Check Coolant Level. (Section 3-4.)

If there is still concern after checking engine coolant level, take an engine oil sample for further analysis. See Take Engine Oil Sample. (Section 3-7.)

1. Park machine on a level surface.
2. Run engine to warm oil.
3. Engage park brake and stop engine.
4. Raise boom and lock in raised position. See Boom Lock. (Section 2-2.)
5. Under left rear side of machine, remove cap screws (1) from drain cover (2) and pull out cover with attached engine oil drain hose.
6. Place suitable container under engine oil drain plug (3). Remove drain plug using two wrenches to avoid twisting hose. Allow oil to drain into suitable container. Dispose of waste oil properly.
7. After oil is drained, make sure O-ring is still intact and install drain plug.
8. Remove left engine side panel. See Engine Side Panels—Remove and Install. (Section 3-2.)
9. Open engine cover. See Opening and Closing Engine Cover. (Section 3-2.)
10. Clean dirt or debris around engine oil filter (4).
11. Place suitable container under engine oil filter.
12. To remove oil filter, turn filter counterclockwise using a filter wrench. Allow oil to drain from filter.

IMPORTANT: DO NOT prefill filter. Debris in unfiltered oil may damage engine components.

13. Apply a film of clean engine oil on seal of new filter.
14. Install filter. Turn filter until seal contacts mounting surface, then turn filter by hand 2/3—1 turn more.

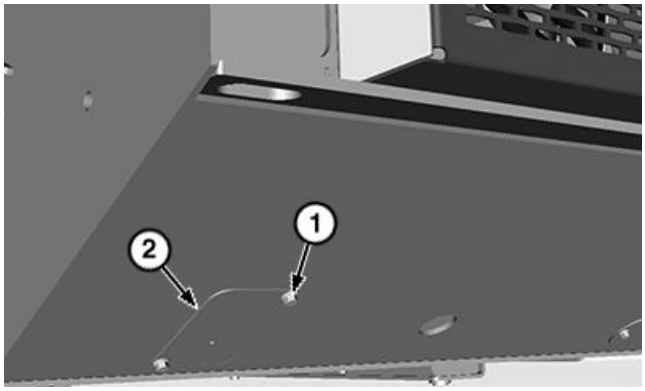

Drain Cover

TX1215586 —UN—11MAY16

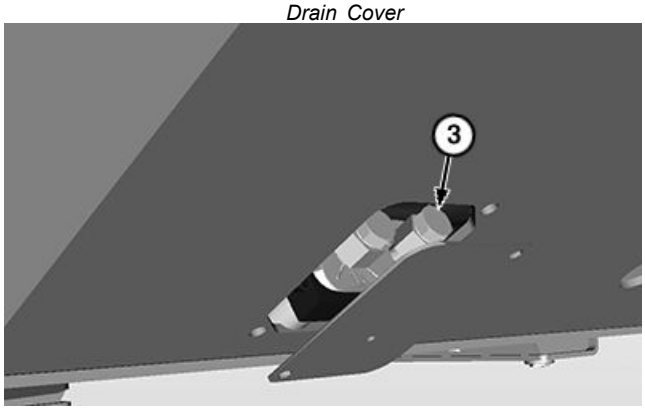

Oil Drain Plug

TX1215676 —UN—18MAY16

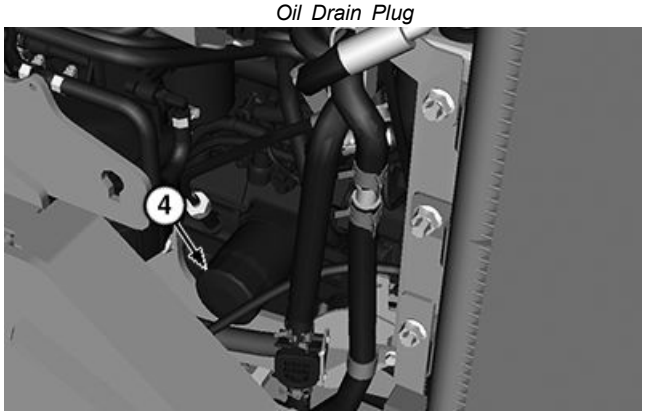

Engine Oil Filter

TX1215681 —UN—12MAY16

1— Cap Screw (2 used)
2— Drain Cover
3— Drain Plug
4— Engine Oil Filter

Continued on next page

JS90457,0000236 -19-14FEB18-1/2

15. Remove engine oil fill cap (5).

IMPORTANT: Avoid engine damage. Do not overfill engine oil.

16. Add oil. For recommended oil, see Diesel Engine Oil. (Section 3-1.)

Specification	
Engine—Oil Capacity	
With Filter	12.5 L 3.3 gal

17. Check engine oil level on dipstick (6).
18. Install engine oil fill cap.
19. Start engine and run for 2 minutes. Check for leaks around filter and drain plug.
20. Stop engine.
21. Check engine oil level on dipstick.
22. Install drain cover and cap screws.
23. Install left engine side panel.
24. Close engine cover.

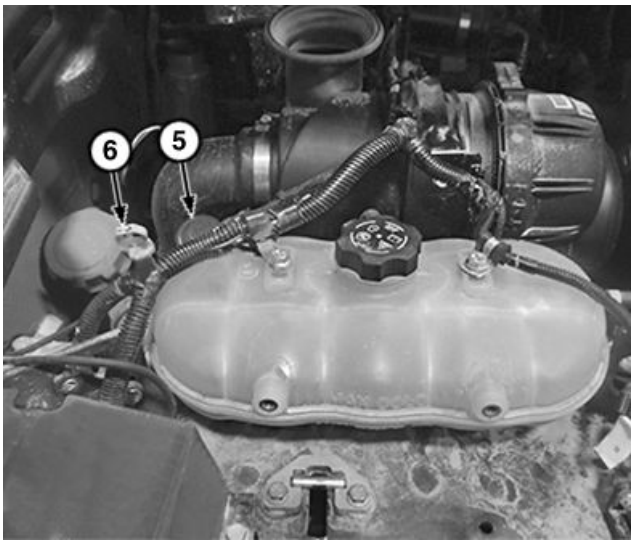

TX1252030A —UN—07FEB18

Engine Oil Fill Cap and Dipstick

5— Engine Oil Fill Cap **6— Dipstick**

JS90457,0000236 -19-14FEB18-2/2

Replace Primary Fuel Filter and Water Separator

1. Park machine on a level surface.
2. Raise boom and lock in raised position. See Boom Lock. (Section 2-2.)
3. Engage park brake and stop engine.
4. Open engine cover and remove right engine side panel. See Engine Side Panels—Remove and Install. (Section 3-2.)
5. Turn fuel shutoff valve (3) to OFF position.
6. Thoroughly clean exterior of primary fuel filter and water separator assembly (1) and surrounding area.
7. Place a suitable container under drain valve (2) of primary fuel filter and water separator.
8. Loosen drain valve to drain water, sediment, and fuel into container. Dispose of waste properly.
9. Close drain valve.
10. Disconnect water-in-fuel sensor wiring.
11. Remove water separator bowl from filter element. Clean and dry separator bowl.
12. Inspect bowl. Replace if necessary.
13. Remove filter and discard.

IMPORTANT: DO NOT prefill fuel filters. Debris in unfiltered fuel will damage fuel system components.

Only lubricate filter seal with diesel fuel before installing.

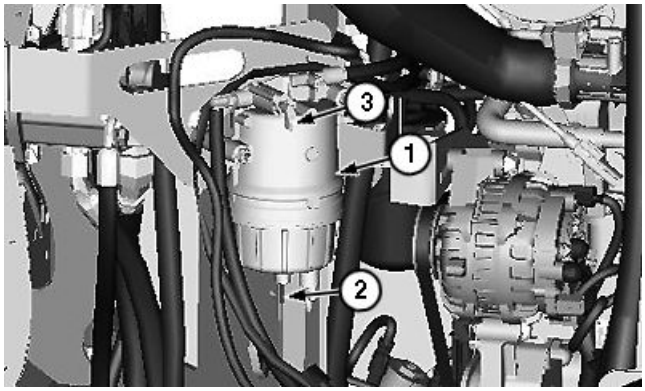

TX1138740 —UN—14JUN13

Fuel Filter and Water Separator

1— Primary Fuel Filter and Water Separator Assembly
2— Drain Valve
3— Fuel Shutoff Valve

14. Install new filter element.
15. Install water separator bowl. Tighten 1/2 turn after seal contacts mounting base.
16. Connect water-in-fuel sensor wiring.
17. Turn fuel shutoff valve to ON position.
18. Bleed fuel system. See Bleed Fuel System. (Section 4-1.)
19. Install right engine side panel and close engine cover.
20. Lower boom.

JK47244,0000322 -19-19FEB18-1/1

Replace Final Fuel Filter

NOTE: Perform this service at required interval when operating in normal conditions. When operating in dry, dusty conditions, it may be necessary to replace final fuel filter more often.

1. Park machine on a level surface.
2. Raise boom and lock in raised position. See Boom Lock. (Section 2-2.)
3. Open engine cover and remove left engine side panel. See Engine Side Panels—Remove and Install. (Section 3-2.)
4. Clean area around final fuel filter (1).

NOTE: Some fuel will be present in final fuel filter housing.

5. Place suitable container under final fuel filter. Rotate final fuel filter counterclockwise and remove from mounting base. Dispose of waste properly.
6. Clean filter mounting base.

IMPORTANT: DO NOT prefill fuel filters. Debris in unfiltered fuel will damage fuel system components.

Only lubricate filter seal with diesel fuel before installing.

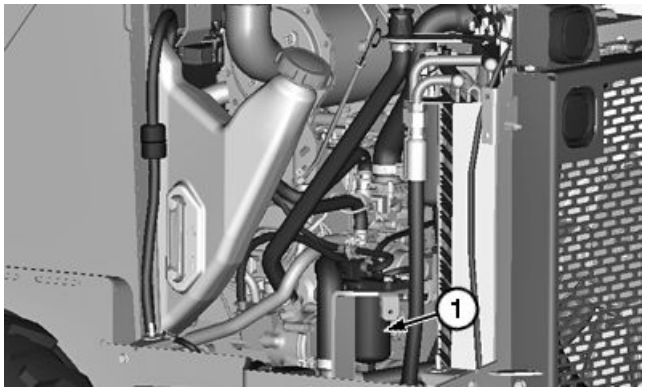

TX1138782 —UN—12SEP13

Final Fuel Filter

1— Final Fuel Filter

7. Install new final fuel filter onto mounting base. Rotate filter housing clockwise by hand. Tighten 1 turn after seal contacts mounting base.
8. Bleed fuel system. See Bleed Fuel System. (Section 4-1.)
9. Install left engine side panel and close engine cover.
10. Lower boom.

JK47244,000034E -19-12SEP13-1/1

Replace Hydraulic Oil Filter

1. Park machine on a level surface.
2. Raise boom and lock in raised position. See Boom Lock. (Section 2-2.)
3. Engage park brake and stop engine.
4. Open engine cover and remove left engine side panel. See Engine Side Panels—Remove and Install. (Section 3-2.)
5. Place suitable container under hydraulic oil filter bowl (1).
6. Turn hydraulic oil filter bowl counterclockwise to remove.
7. Remove filter element and discard.
8. Install new filter element into hydraulic oil filter bowl. Ensure O-ring is properly seated around filter element.
9. Turn hydraulic oil filter bowl clockwise to install. Tighten to specification.

Specification	
Filter Bowl—Torque	39 N·m 29 lb·ft

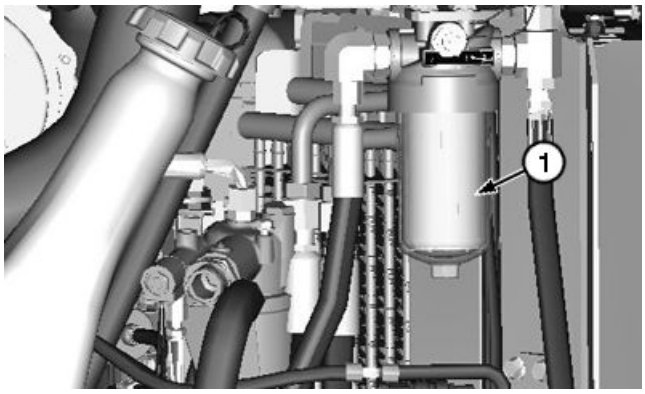

TX1144062A —UN—16SEP13

Hydraulic Oil Filter Bowl

1— Hydraulic Oil Filter Bowl

10. Install left engine side panel and close engine cover.
11. Check hydraulic reservoir oil level. See Check Hydraulic Oil Level. (Section 3-4.)
12. Lower boom.

JS90457,0000155 -19-12FEB18-1/1

Take Fluid Samples

See an authorized John Deere dealer for procedures and sampling equipment.

- Hydraulic oil
- Hydrostatic planetary gear case oil
- Engine coolant
- Diesel fuel

DB84312,0000252 -19-14FEB18-1/1

Check Coolant Condition

CAUTION: Prevent possible injury from hot, spraying fluids. Shut off engine. Remove filler cap only when cool enough to touch with bare hands. Slowly loosen cap to relieve pressure before removing completely.

NOTE: Check coolant every 1000 hours, yearly, or when replacing 1/3 or more of coolant using SERVICEGARD™ tool program.

1. Park machine on a level surface.
2. Engage park brake and stop engine.
3. Open engine cover to access surge tank (2). See Opening and Closing Engine Cover. (Section 3-2.)
4. Check surge tank for coolant level. Coolant should be above the MIN COLD line (4) but below the MAX COLD line (3).
5. Test engine coolant. See Testing Coolant Freeze Point. (Section 3-1.)
6. Install surge tank cap (1).
7. Close engine cover.

1— Surge Tank Cap
2— Surge Tank
3— MAX COLD Line
4— MIN COLD Line

SERVICEGARD is a trademark of Deere & Company

Pressurized Fluids

TS281 —UN—15APR13

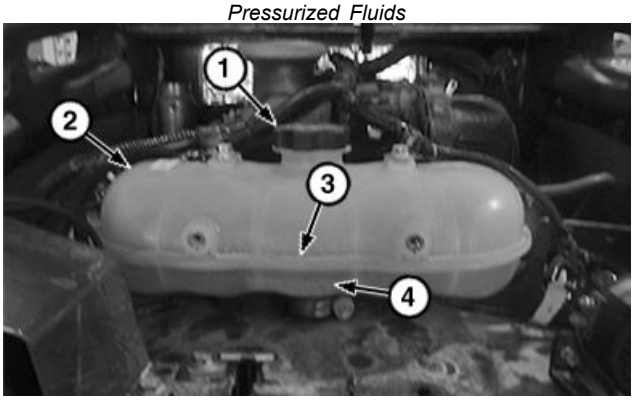

Surge Tank

TX1250189A —UN—12JAN18

JS90457,000024C -19-13FEB18-1/1

Replace Fuel Tank Breather

1. Raise operator's station. See Raising Operator's Station (3-2).
2. Rotate fuel tank breather filter (1) counterclockwise to remove.
3. Discard fuel tank breather filter.
4. Install new breather filter.
5. Lower operator's station.

1— Fuel Tank Breather Filter

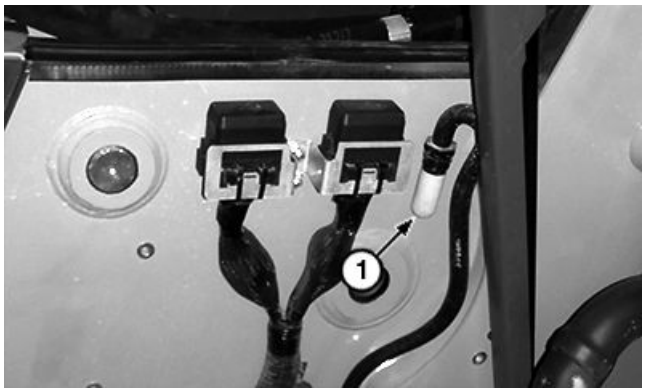

Fuel Tank Breather Filter

TX1252138A —UN—08FEB18

JS90457,000015B -19-11DEC24-1/1

Replace Hydraulic Oil Reservoir Breather

1. Park machine on a level surface.
2. Raise boom and lock in raised position. See Boom Lock. (Section 2-2.)
3. Open engine cover and remove left engine side panel. See Engine Side Panels—Remove and Install. (Section 3-2.)
4. Loosen and slide hose clamps away from hydraulic oil reservoir breather (1). Remove hoses.
5. Remove hydraulic oil reservoir breather.
6. Install new hydraulic oil reservoir breather.
7. Install hoses and tighten clamps.
8. Install left engine side panel and close engine cover.
9. Lower boom.

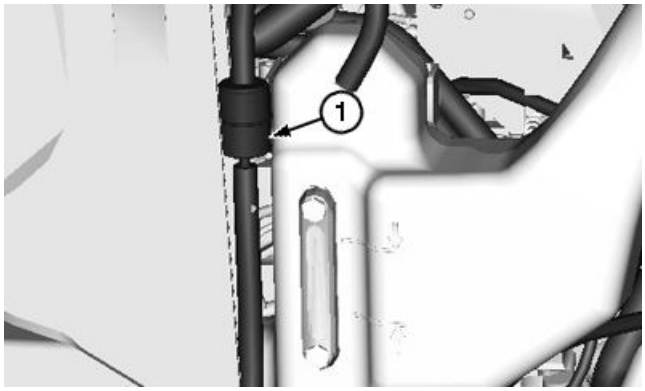

TX1139684 —UN—01JUL13

Hydraulic Oil Reservoir Breather

1— Hydraulic Oil Reservoir Breather

JS90457,000015C -19-13FEB18-1/1

Drain and Refill Hydraulic Oil

IMPORTANT: To prevent hydraulic system component damage when adding oil to the hydraulic reservoir, be careful not to get dirt into reservoir or oil.

To ensure an accurate reading, park machine on smooth, level ground and check level only when hydraulic oil is cold and boom is down with boom and bucket cylinders fully retracted.

Do not overfill hydraulic oil reservoir. An overfilled hydraulic oil reservoir will not allow for oil expansion, which may result in oil leakage past hydraulic reservoir breather or fill cap.

1. Park machine on a level surface.
2. Raise and block machine. See Raising and Blocking Machine. (Section 3-2.)
3. Open engine cover.
4. Remove hydraulic reservoir fill cap (4).
5. Remove cap screws (2) and service panel (1) from under machine.
6. Position a suitable container under drain plug (5).
7. Remove drain plug and drain oil. Dispose of waste oil properly.
8. Install drain plug.
9. Fill hydraulic oil reservoir. For recommended hydraulic oil, see Hydraulic and Hydrostatic Oil. (Section 3-1.)

Specification	
Hydraulic Reservoir Oil—Capacity	26.5 L 7.0 gal

10. Check hydraulic reservoir oil level on sight glass (3). Oil level should be between the two arrows.
11. Inspect drain plug for leaks.
12. Install bottom panel.
13. Install hydraulic reservoir fill cap.
14. Close engine cover.

1— Service Panel
2— Cap Screw (5 used)
3— Sight Glass
4— Fill Cap
5— Drain Plug

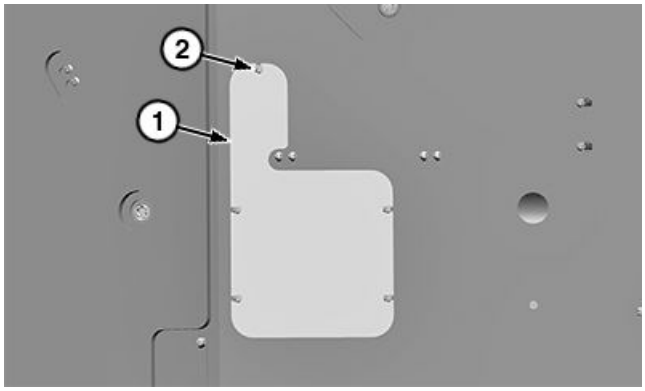

TX1252145A —UN—08FEB18

Service Panel

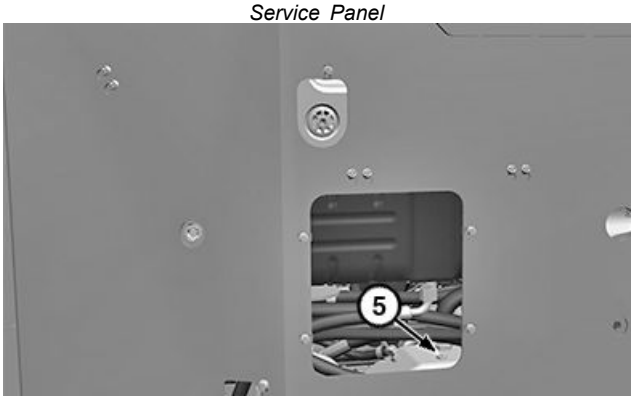

TX1252330A —UN—13FEB18

Drain Plug

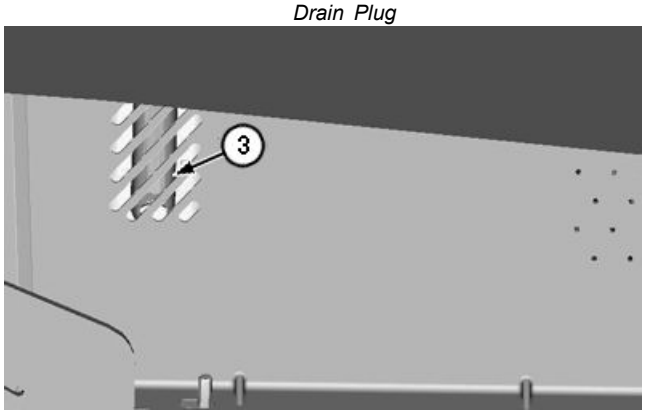

TX1145011 —UN—03OCT13

Sight Glass

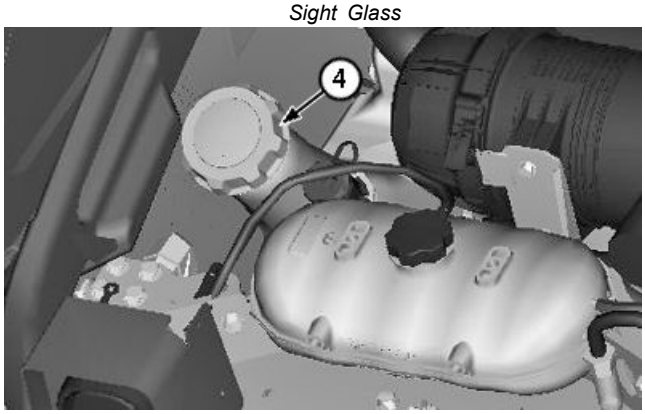

TX1145010 —UN—04OCT13

Hydraulic Reservoir Fill Cap

JS90457,000015D -19-13FEB18-1/1

Drain and Refill Hydrostatic Planetary Gear Case Oil

1. Park machine on a level surface with drain plug (2) at bottom of gear case.
2. Stop engine.

CAUTION: High-pressure release of fluids from a pressurized system can cause serious burns. Wait for hydrostatic planetary gear case oil to cool. Keep body and face away from check plug (1). Gradually loosen fill plug (3) to release pressure.

3. Allow machine to cool. Slowly loosen fill plug (3) to release pressure.
4. Remove drain plug. Allow oil to drain into a container. Dispose of waste properly.
5. Install drain plug.
6. Remove fill plug.
7. Remove check plug (1).
8. Add oil to fill plug hole until oil flows out of check plug hole. For recommended oil, see Maintenance—Machine. (Section 3-1.)

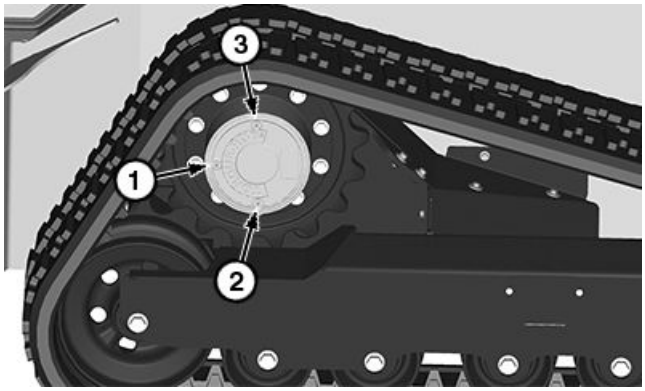

TX1244568 —UN—13SEP17

Hydrostatic Planetary Gear Case

1— Check Plug
2— Drain Plug
3— Fill Plug

Specification

Hydrostatic Planetary Gear Case Oil—Capacity (per side)	0.80 L 27.0 fl oz

9. Install check and fill plugs.

DB84312,000023E -19-13FEB18-1/1

Check and Adjust Engine Valve Lash

See an authorized John Deere dealer for engine valve clearance adjustment.

CED,OUO1032,2768 -19-30MAR17-1/1

Drain and Refill Cooling System

Drain Cooling System

CAUTION: Prevent possible injury from hot spraying fluids. Shut off engine. Remove filler cap only when cool enough to touch with bare hands. Slowly loosen cap to first stop to relieve pressure before removing completely.

1. Park machine on a level surface.
2. Engage park brake and stop engine.
3. Allow engine to cool.
4. Open engine cover. See Opening and Closing Engine Cover (Section 3-2).
5. Remove right engine side panel. See Engine Side Panels—Remove and Install (Section 3-2).
6. Slowly turn surge tank cap (1) to release pressure. Remove cap.
7. Under left rear side of machine, remove cap screws (3) from drain cover (2) and pull out cover to access drain hose (5). Place suitable container under drain hose.

NOTE: Drain valve (6) is located inside left side of engine compartment and in front of the radiator.

8. Route coolant drain hose through access cover opening. Place suitable container under drain hose.
9. On left side of machine, open cooling system drain valve (6) and allow coolant to drain into container. Dispose of used coolant properly.
10. Close cooling system drain valve.

1— Surge Tank Cap
2— Drain Cover
3— Cap Screw (2 used)
5— Drain Hose
6— Drain Valve

T6642EK —UN—01NOV88

Surge Tank Warning

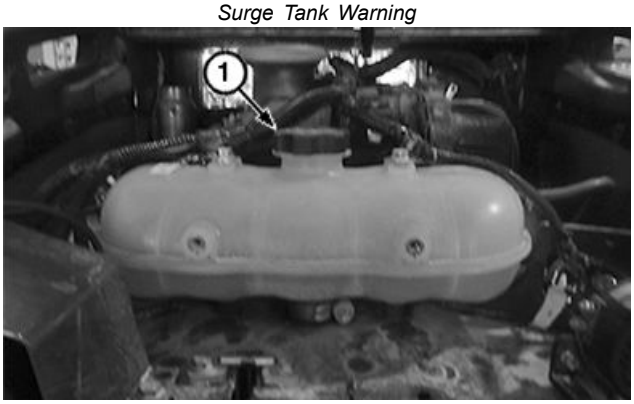

TX1251615A —UN—31JAN18

Surge Tank Cap

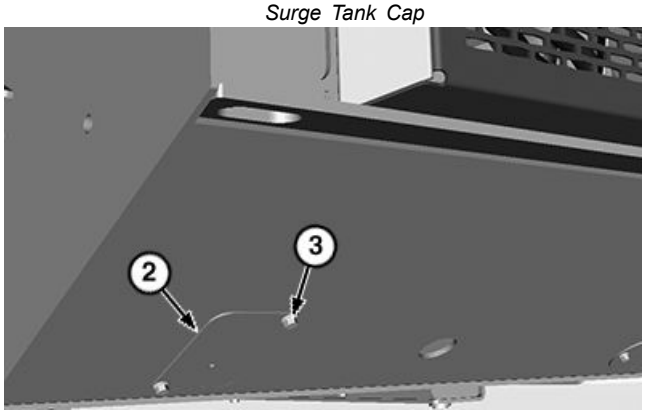

TX1216767 —UN—02JUN16

Drain Cover

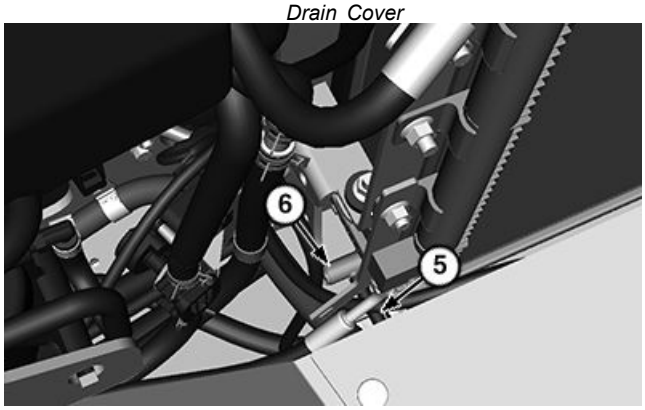

TX1215482 —UN—02JUN16

Drain Valve

Continued on next page

JS90457,000021B -19-17NOV22-1/2

Fill Cooling System

IMPORTANT: Use only permanent-type, low silicate, ethylene glycol base antifreeze in coolant solution. Other types of antifreeze may damage cylinder seals.

If not using premixed coolant, use only distilled water when mixing with ethylene glycol concentrate.

NOTE: John DeereCool-Gard™ II II Pre-Mix coolant is recommended when adding new coolant to cooling system.

Follow directions on container for correct mixture ratio.

1. Check condition of coolant system hoses. If new hoses are needed, see an authorized John Deere dealer.
2. Fill system with coolant. For recommended coolant, see Diesel Engine Coolant (engine without wet sleeve cylinder liners) (Section 3-1).

Specification	
Cooling System—Capacity	12.5 L 3.3 gal

3. Install surge tank cap.

Cool-Gard is a trademark of Deere & Company

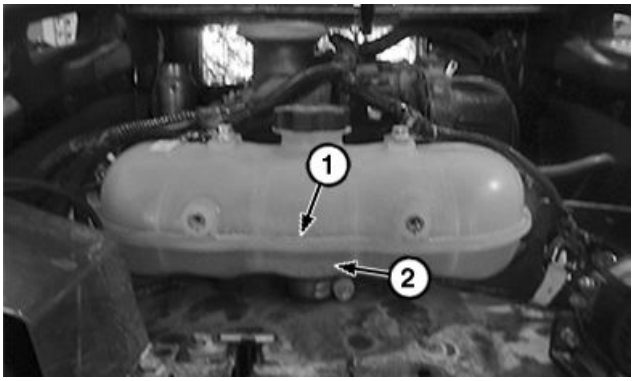

TX1251616A —UN—31JAN18

Surge Tank Cap

1— MAX COLD Mark **2— MIN COLD Mark**

4. Start engine and run until engine reaches operating temperature, allowing entire system to be filled with coolant.
5. Stop engine.
6. Allow engine to cool.
7. Check coolant level on surge tank. Coolant should be above the MIN COLD line (4), but below the MAX COLD line.

JS90457,000021B -19-17NOV22-2/2

Clean Machine Regularly

Remove any grease, oil, fuel, or debris buildup to avoid possible injury or machine damage.

IMPORTANT: Avoid using high-pressure washing for electronic or electric devices, including the engine control unit (ECU), relays, and harness couplers.

Never steam-clean or pour cold water on the high-pressure fuel pump while it is still warm; doing so may cause pump parts to seize. Also, avoid steam-cleaning electrical components, wiring, sensors, and the ECU.

Avoid using high-pressure washing when cleaning the exhaust stack to prevent damage to engine.

Avoid machine damage. Machine is equipped with a sealed and lubricated track, avoid water being forced between the plastic pins and rubber plugs while washing machine with pressure washer.

Steam-clean engine thoroughly. High-pressure washing is not recommended.

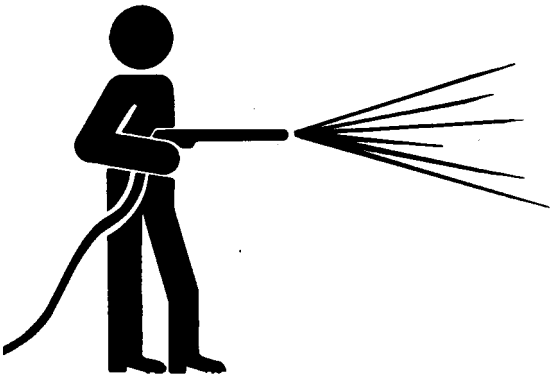

T6642EJ —UN—18OCT88

Clean Machine Regularly

High-pressure washing greater than 1379 kPa (13.8 bar) (200 psi) can damage freshly painted finishes. Paint should be allowed to air-dry for 30 days minimum after receipt of machine before cleaning with high pressure. Use low-pressure wash operations until 30 days have elapsed.

Do not spray oil cooler fins at an angle; doing so may bend the cooler fins.

BB11933,0000076 -19-04DEC24-1/1

Inspect and Clean Polycarbonate Windows

Polycarbonate windows are important for the protection of the operator and the safe operation of the machine. Inspect the windows system regularly, and if surface crazing or cracks are observed, replace windows using only John Deere replacement parts to ensure the original operator protection level. Inspect the windows after any significant impact to the windows or frame.

NOTE: The use of cleaning agents, solvents, polishing compounds, or waxes not listed in this instruction block is not recommended. Contact your John Deere dealer or other service provider for additional information regarding glazing materials.

IMPORTANT: DO NOT use glass cleaners on polycarbonate windows.

NEVER use abrasive or highly alkaline cleaners on polycarbonate windows. Some cleaning compounds may attack the polycarbonate material, resulting in cracks.

NEVER use aromatic or halogenated solvents like toluene, benzene, acetone, tetrachloride, or petroleum products. Gasoline should not be used.

Acceptable cleaning agents are John Deere Polycarbonate Cleaner and John Deere Polycarbonate Wash.

Acceptable soap based cleaning agents are Joy®, Palmolive® Liquid, and Scott® Pink Lotion Skin Cleanser.

Cleaning should never be done in direct sunlight or at high temperatures, as this can lead to staining.

Before washing or applying any cleaning agents or solvents, inspect the hard coating of window for microcrazing or cracking. Do NOT apply solvents or cleaning agents to window with microcrazing or cracks.

Minor scratches and abrasions can be minimized by using a buffing compound or polish agent like NOVUS 1 or 2. Test any intended polishing product in a small area before using on the entire window. All polishing should follow the manufacturer's instructions to prevent further damage to the window's hard coat.

To begin the cleaning process, flush away as much loose dirt as possible with water, then clean the windows using a solution of approved cleaner and lukewarm water. Use a soft, grit-free cloth or sponge to loosen any dirt or grime. Never scrub with brushes, steel wool, or other abrasive materials. Never use squeegees, razor blades, or other sharp instruments to remove deposits or spots. The windows are made of a polycarbonate material, which is less abrasion resistant than glass. The windows will scratch.

Use of incompatible cleaning materials can cause structural and/or surface damage.

IMPORTANT: Always rinse window with water prior to cleaning process.

The edges of polycarbonate sheet are not protected with an abrasion and chemical resistance coating. Do not allow cleaning solutions and solvents to pool along the edges at any time. Always rinse edges thoroughly with generous amounts of clean, lukewarm water.

CAUTION: Make sure the work area is well ventilated when working with organic solvents.

Solvent fumes can be hazardous to health if proper safety precautions are not taken.

Do not smoke around organic solvents. Solvents can cause risk of fire if proper safety precautions are not taken.

For all mentioned chemicals, consult the manufacturer's material safety data sheet (MSDS) for proper safety precautions.

Masking adhesive and glazing compounds can be removed by applying Isopropyl Alcohol or Naphtha VM&P grade to a soft cloth and rubbing lightly; additionally, any of these cleaning agents or butyl cellosolve can be used to remove paints, marking pen inks, lipstick, or other forms of graffiti. Afterwards, wash the window using a solution of approved cleaner and lukewarm water. Rinse thoroughly to remove any trace of solvents.

Masking tape and adhesive tape work well for lifting off old, weathered paints.

To remove labels and stickers, the use of kerosene is generally effective. If the solvent does not penetrate the sticker material, apply heat using a hair dryer to soften the adhesive and promote removal. Afterwards, wash the window using a solution of approved cleaner and lukewarm water. Rinse thoroughly to remove any trace of solvents.

To remove tree sap, flush away as much loose dirt as possible, then use John Deere Polycarbonate Cleaner, kerosene, or Naphtha VM&P grade on a soft cloth and rub lightly. Rinse well with clean water and dry with a chamois or softer cloth to prevent water spotting.

Joy is a trademark of Procter & Gamble
Palmolive is a trademark of Colgate-Palmolive
Scott is a trademark of Kimberly-Clark Corporation

MB60223,0000088 -19-06FEB25-1/1

Bleed Fuel System

NOTE: This procedure should be performed after each fuel filter change or when the engine has run out of fuel.

This machine is equipped with an electric low-pressure fuel pump.

1. Make sure fuel tank is full.
2. Open engine cover and remove right engine side panel to access primary fuel filter and water separator (1). See Engine Side Panels—Remove and Install. (Section 3-2.)
3. Check that fuel shutoff valve (2) is in the ON position.
4. Turn switched power ON. The electric low-pressure fuel pump will start to bleed air.

   If fuel filter was replaced, allow fuel pump to run for 120 seconds before trying to start engine.

   If engine has run out of fuel, allow fuel pump to run for 60 seconds before trying to start engine.
5. Start engine. Check fuel supply system for leaks. If engine does not start or starts and stalls, repeat procedure.

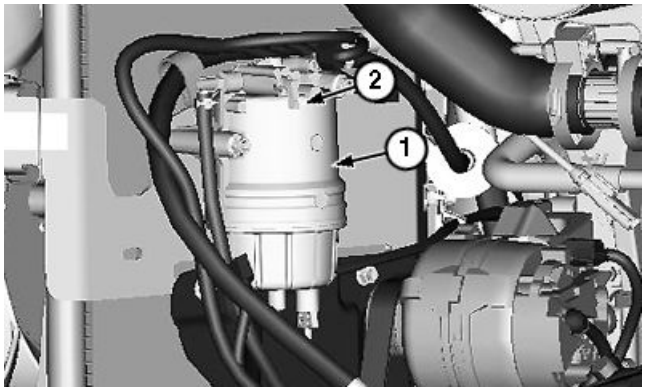

TX1139496 —UN—27JUN13

Fuel System

1— Primary Fuel Filter and Water Separator

2— Fuel Shutoff Valve

6. Install right engine side panel and close engine cover.

JK47244,00002E0 -19-27JUN13-1/1

Do Not Service or Adjust Injection Nozzles or High-Pressure Fuel Pump

If injection nozzles are not working correctly or are dirty, the engine will not run normally.

Changing the high-pressure fuel pump in any way not approved by the manufacturer will end the warranty. See copy of the John Deere warranty on this machine.

Do not service a high-pressure fuel pump that is not operating correctly.

VD76477,0000366 -19-10FEB25-1/1

Do Not Service Control Valves, Cylinders, Pumps, or Motors

Special tools and information are needed to service control valves, cylinders, pumps, or motors.

If these parts need service, see a John Deere dealer or other service provider.

TX,90,DH2537 -19-29OCT24-1/1

Precautions for Alternator and Regulator

When batteries are connected, follow these rules:

1. Disconnect negative (-) battery cable when working on or near alternator or regulator.
2. DO NOT TRY TO POLARIZE ALTERNATOR OR REGULATOR.
3. Be sure that alternator wires are correctly connected BEFORE connecting batteries.
4. Do not ground alternator output terminal.
5. Do not disconnect or connect any alternator or regulator wires while batteries are connected or while the alternator is operating.
6. Connect batteries or a booster battery in the correct polarity (positive [+] to positive [+] and negative [-] to negative [-]).
7. Do not disconnect the batteries when engine is running and alternator is charging.
8. Disconnect battery cables before connecting battery charger to the batteries. If machine has more than one battery, each battery must be charged separately.
9. Before washing machine, place a water repellent cover over the alternator.
10. To prevent component damage, the water jets need to be set at a 45-degree angle with reduced water pressure. Avoid direct contact with electrical and electronic connectors.

CED,OUO1021,185 -19-04MAR20-1/1

Handling, Checking, and Servicing Batteries Carefully

NOTE: Under normal operating conditions, general service of maintenance free batteries is not required.

CAUTION: Battery gas can explode. Keep sparks and flames away from batteries. Use a flashlight to check battery electrolyte level.

Never check battery charge by placing a metal object across the posts. Use a voltmeter or hydrometer.

Always remove grounded (-) battery clamp first and replace it last.

Sulfuric acid in battery electrolyte is poisonous. Sulfuric acid is strong enough to burn skin, eat holes in clothing, and cause blindness if splashed into eyes.

Avoid the hazard by:

1. **Filling batteries in a well-ventilated area.**
2. **Wearing eye protection and rubber gloves.**
3. **Avoiding breathing fumes when electrolyte is added.**
4. **Avoiding spilling or dripping electrolyte.**
5. **Using proper jump start procedure.**

If acid is spilled on a person:

1. **Flush contacted skin with water.**
2. **Apply baking soda or lime to contacted area to help neutralize the acid.**
3. **Flush eyes with water for 15—30 minutes.**
4. **Get medical attention immediately.**

If acid is swallowed:

1. **Do not induce vomiting.**
2. **Drink large amounts of water or milk, but do not exceed 1.9 L (2 qt).**
3. **Get medical attention immediately.**

CAUTION: Battery posts, terminals, and related accessories contain lead and lead compounds, chemicals known to the State of California to cause cancer and reproductive harm. Wash hands after handling.

If electrolyte spills on the floor, use one of the following mixtures to neutralize the acid: 0.5 kg (1 lb) baking soda in 4 L (1 gal) water or 0.47 L (11.0 fl oz) household ammonia in 4 L (1 gal) water.

IMPORTANT: Do not overfill the battery cells.

Check the specific gravity of electrolyte in each battery cell.

See a John Deere dealer or other service provider for SERVICEGARD™ battery and coolant tester. Follow directions included with the tester.

TS204 —UN—15APR13

Exploding Battery Gas

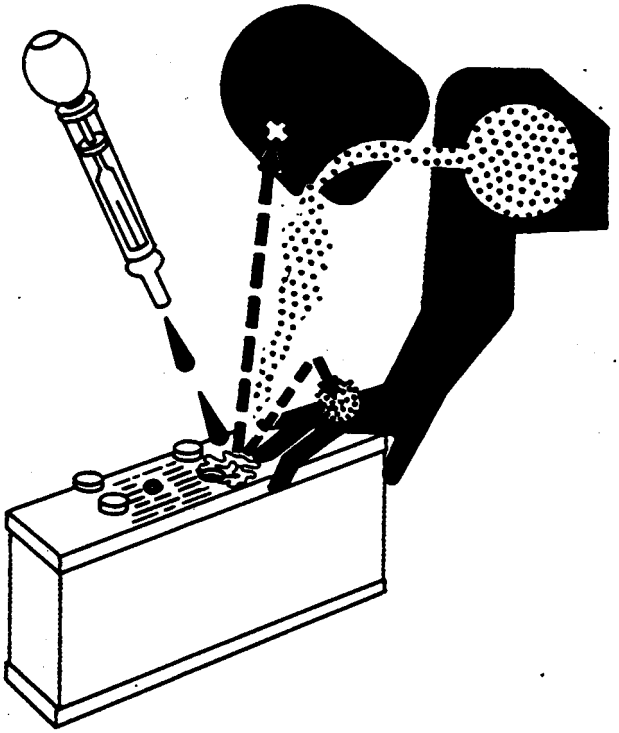

TS203 —UN—23AUG88

Battery Electrolyte

T85402 —UN—10NOV88

Battery and Coolant Tester

Continued on next page

TX,SERV,BATT,CARE -19-29OCT24-1/2

A fully charged battery will have a corrected specific gravity reading of 1.260. If the reading is below 1.200, charge the battery.

SERVICEGARD is a trademark of Deere & Company

TX,SERV,BATT,CARE -19-29OCT24-2/2

Using Battery Charger

12-Volt System

CAUTION: Prevent possible injury from exploding battery. Do not charge a battery if ambient temperature is below 0°C (32°F). Warm battery to 16°C (60°F) before charging.

Turn off charger before connecting or disconnecting it.

IMPORTANT: Do not use battery charger as a booster if a battery has a 1.150 specific gravity reading or lower.

Disconnect battery ground (-) clamp before charging batteries in the machine to prevent damage to electrical components.

NOTE: Some battery chargers may also be used as a booster to start the engine. Follow battery charger manufacturer's operating instruction before boosting.

1. Turn the battery disconnect switch (if equipped) to the OFF position.
2. Ventilate the area where battery is being charged.
3. Connect positive (+) cable to the positive (+) terminal of machine battery.
4. Connect negative (-) cable to the negative (-) terminal of machine battery.

CAUTION: Prevent possible injury from exploding battery. Follow battery charger manufacturer's operating instructions before charging.

IMPORTANT: Prevent battery or machine damage from improper use of charger. Follow battery charger manufacturer's operation instruction before charging.

TS204 —UN—15APR13

Prevent Battery Explosions

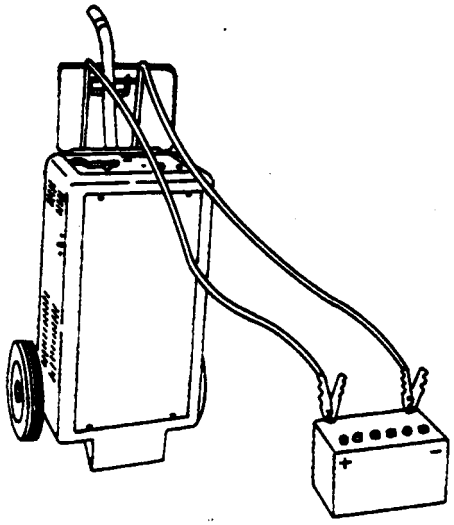

N36890 —UN—07OCT88

Charger

5. Stop or cut back charging rate if battery case becomes hot or is venting electrolyte. Battery temperature must not exceed 52°C (125°F).
6. Remove charger cables in reverse order of connection.

Continued on next page

KR46761,0000C06 -19-17AUG21-1/2

24-Volt System

CAUTION: Prevent possible injury from exploding battery. Do not charge a battery if ambient temperature is below 0°C (32°F). Warm each battery to 16°C (60°F) before charging.

Turn off charger before connecting or disconnecting it.

IMPORTANT: Do not use battery charger as a booster if a battery has a 1.150 specific gravity reading or lower.

Disconnect battery ground (-) clamp before charging batteries in the machine to prevent damage to electrical components.

NOTE: Some battery chargers may also be used as a booster to start the engine. Follow battery charger manufacturer's operating instruction before boosting.

1. Turn the battery disconnect switch (if equipped) to the OFF position.
2. Ventilate the area where batteries are being charged.
3. Connect positive (+) cable to the positive (+) terminal of one machine battery.
4. Connect negative (-) cable to the negative (-) terminal of second machine battery.

CAUTION: Prevent possible injury from exploding battery. Follow battery charger manufacturer's operating instructions before charging.

IMPORTANT: Prevent battery or machine damage from improper use of charger. Follow battery charger manufacturer's operation instruction before charging.

TS204 —UN—15APR13

Prevent Battery Explosions

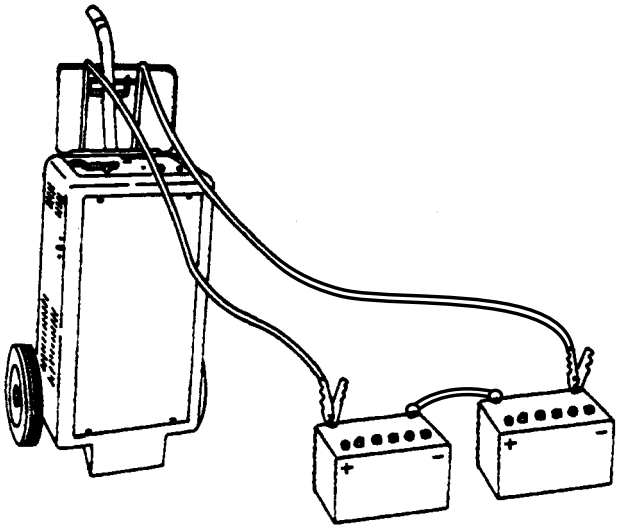

TX1314241 —UN—22JUN21

Charger

5. Stop or cut back charging rate if battery case becomes hot or is venting electrolyte. Battery temperature must not exceed 52°C (125°F).
6. Remove charger cables in reverse order of connection.

KR46761,0000C06 -19-17AUG21-2/2

Using Booster Batteries—12-Volt System

Before boost starting, machine must be properly shut down to prevent unexpected machine movement when engine starts.

CAUTION: Prevent possible injury from exploding battery. An explosive gas is produced while batteries are in use or being charged. Keep flames or sparks away from the battery area. Make sure the batteries are charged in a well-ventilated area.

IMPORTANT: The machine electrical system is a 12-volt negative (-) ground. Use only 12-volt booster batteries.

1. Connect one end of the positive cable to the positive terminal of the machine batteries and the other end to the positive terminal of the booster batteries.
2. Connect one end of the negative cable to the negative terminal of the booster batteries. Connect other end of the negative cable to the machine as far away from the machine batteries as possible.
3. Start engine.
4. Immediately after starting engine disconnect end of the negative cable from the machine. Then disconnect the other end of the negative cable from the negative terminal of the booster batteries.
5. Disconnect positive cable from booster batteries and machine batteries.

TS204 —UN—15APR13

Using Booster Batteries

OUT4001,00000E1 -19-21JUL17-1/1

Removing Battery

CAUTION: Battery gas can explode. Keep sparks and flames away from batteries. Use a flashlight to check battery electrolyte level.

NOTE: If battery is dead, battery will need to be charged or engine boost started before removal procedure so boom can be raised.

1. Remove attachment.
2. Park machine on level surface.
3. Raise boom and lock in raised position. See Boom Lock. (Section 2-2.)
4. Engage park brake and stop engine.
5. Open engine cover and remove left engine side panel. See Engine Side Panels—Remove and Install. (Section 3-2.)
6. Disconnect negative (-) terminal (2) cable from battery.
7. Pull back red positive terminal cover (1) and disconnect positive (+) cable from battery.
8. Clean battery with a damp cloth or rag. Keep dirt out of battery cells.
9. Loosen J-bolts (3) on battery hold-down bracket.
10. Lift battery from battery compartment.
11. Clean battery, battery terminals, cable ends, battery compartment, and other parts with a solution of 1 part baking soda to 4 parts water. Keep solution out of battery cells.
12. Rinse all parts with clean water and let dry.

NOTE: If a new battery is needed, install a battery of equal specification. See Replacing Battery in this section.

TX1139742 —UN—16SEP13

Battery

1— Positive Terminal Cover
2— Negative Terminal
3— J-Bolt (2 used)

13. Place battery in battery compartment.
14. Install battery hold-down bracket.
15. Install J-bolts and tighten hardware.
16. Connect positive (+) cable to battery positive (+) terminal. Apply petroleum or silicone spray to terminal to prevent corrosion. Make sure connection is tight. Push red positive cover over positive terminal.
17. Connect negative (-) cable to battery negative (-) terminal. Apply petroleum or silicone spray to terminal to prevent corrosion. Make sure connection is tight.
18. Install left engine side panel and close engine cover.
19. Lower boom.

JK47244,000030A -19-12JUL13-1/1

Replacing Battery

CAUTION: Prevent possible injury from exploding battery. An explosive gas is produced while batteries are in use or being charged. Keep flames or sparks away from the battery area. Make sure the batteries are charged in a well-ventilated area.

Different types of batteries may have different rates of charge. This difference could overload the battery causing it to malfunction. Always replace battery with one of the same type. For example, replace a maintenance-free battery with a new maintenance-free battery. Battery must meet one of the specifications below.

	Specification
Battery—Cold Cranking Amps (CCA)	750
	Optional 925
Battery—Minutes Reserve Capacity	150
	Optional 180

For removal and installation procedure, see Removing Battery in this section.

DB84312,0000236 -19-02FEB18-1/1

Welding on Machine

CAUTION: Avoid potentially toxic fumes and dust. Hazardous fumes can be generated when paint is heated by welding, soldering, or using a torch. Do all work outside or in a well-ventilated area. Dispose of paint and solvent properly.

When sanding or grinding painted surfaces, avoid breathing the dust. Wear an approved respirator. When using solvent or paint stripper, remove stripper with soap and water before welding. Remove solvent or paint stripper containers and other flammable material from area. Allow fumes to disperse at least 15 minutes before welding or heating.

IMPORTANT: Have only a qualified welder perform this job. Connect welder ground clamp close to each weld area so electrical current does not pass through any bearings, articulation joints, or pivot points. Remove or protect all parts that can be damaged by heat or weld splatter.

1. Remove paint before welding or heating.
   - When sanding or grinding paint, avoid breathing the dust.
   - Wear an approved respirator. When using solvent or paint stripper, remove stripper with soap and water before welding.
   - Remove solvent or paint stripper containers and other flammable material from area.
   - Allow fumes to disperse at least 15 minutes before welding or heating.

IMPORTANT: Electrical current traveling from the welder through the machine electrical system may damage the machine electrical system, including battery and control units. Disconnect battery positive and negative cables before welding on machine.

2. Disconnect the negative (-) battery cables.
3. Disconnect the positive (+) battery cables.
4. Cover, protect, or move any wiring harness sections away from welding area.

For any repairs, see a John Deere dealer or other service provider.

VD76477,00005A0 -19-29OCT24-1/1

Keep Electronic Control Unit Connectors Clean

IMPORTANT: Do not open control unit and do not clean with a high-pressure spray. Moisture, dirt, and other contaminants may cause permanent damage.

1. Keep terminals clean and free of foreign debris. Moisture, dirt, and other contaminants may cause the terminals to erode over time and not make a good electrical connection.
2. If a connector is not in use, put on the proper dust cap or an appropriate seal to protect it from foreign debris and moisture.
3. Control units are not repairable.
4. Since control units are the components LEAST likely to fail, isolate failure before replacing by completing a diagnostic procedure. (See your John Deere dealer.)
5. The wiring harness terminals and connectors for electronic control units are repairable.

DX,WW,ECU04 -19-11JUN09-1/1

JDLink™ Machine Monitoring System (MMS)—If Equipped

JDLink is an equipment monitoring and information delivery system. JDLink automatically collects and manages information about where and how construction and forestry equipment is being used, as well as critical machine health data and service status.

For more information, see a John Deere dealer or other service provider or visit www.deere.com (browse to Construction, Services and Support, JDLink).

JDLink is a trademark of Deere & Company

VD76477,0001541 -19-29OCT24-1/1

Remove and Install Halogen Bulbs

NOTE: Light-emitting diodes (LEDs) (if equipped) are not repairable and require replacement.

IMPORTANT: All work light bulbs are 55 watts bulbs and red taillights are 25 watts bulbs. Work light bulb should never be substituted to a red taillights to avoid fuse blowing and melting of fuse box.

1. Remove TORX® screws (1) and pull out lamp housing (2) from machine.
2. Disconnect harness connector (3).
3. Release retainer clip (4) to remove halogen bulb (5) from lamp.
4. Disconnect halogen bulb from connector (6).

IMPORTANT: Prevent premature bulb malfunction. Do not touch the halogen bulb with bare hands. Oil and moisture may cause premature bulb malfunction. If bulb is touched, clean bulb glass using an oil-free cloth and alcohol.

5. Connect new halogen bulb and install into lamp.
6. Install retainer clip.

NOTE: Wire and isolator must both be locked. Insulator must be slid down to retainer clip.

7. Connect harness connector and install lamp housing back into machine.
8. Install TORX® screws. Tighten to specification.

Specification

TORX® Screw—Torque.....1.2 N·m (10.6 lb·in)

1— TORX® Screw (4 used)
2— Lamp Housing
3— Harness Connector
4— Retainer Clip
5— Halogen Bulb
6— Connector

TORX is a trademark of Camcar/Textron

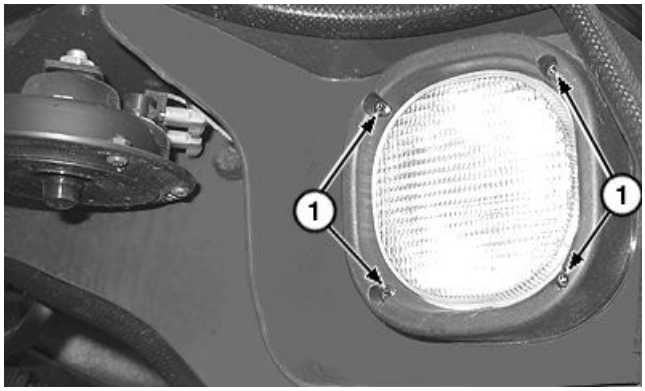

Four Screws for Light Assembly

TX1066041A —UN—13OCT09

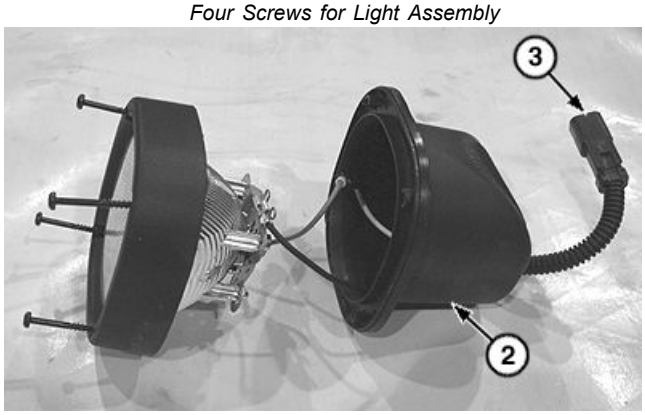

Bulb Housing and Wire Connector

TX1066042A —UN—13OCT09

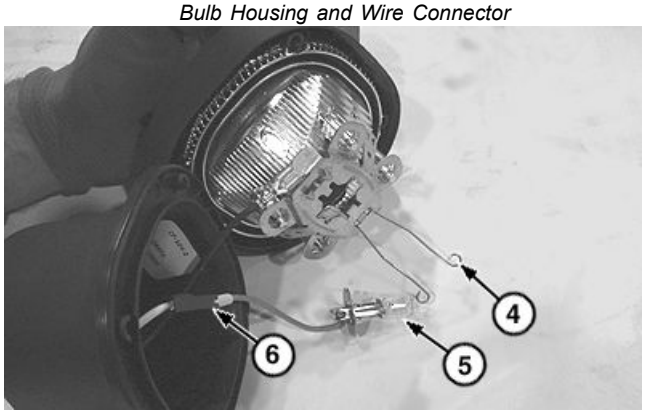

Retainer Clip and Halogen Bulb

TX1066043A —UN—13OCT09

bj2d8qn,1712906658316 -19-14APR24-1/1

Remove and Install Light-Emitting Diode (LED) Lights

Front LED Lights

1. Remove TORX® screws (1) and pull out light-emitting diode (LED) lights (2) from machine.
2. Disconnect harness connectors.
3. Connect harness connectors and install new LED lights into machine.
4. Install TORX® screws.

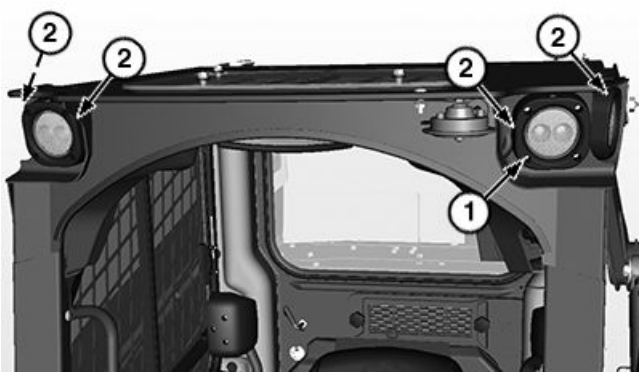

TX1215281 —UN—05MAY16

Front Light-Emitting Diode (LED) Lights

1— TORX® Screw (16 used)

2— Light-Emitting Diode (LED) Light (4 used)

TORX is a trademark of Camcar/Textron

JS90457,0000163 -19-31JAN18-1/2

Rear LED Lights

1. Open engine cover. See Opening and Closing Engine Cover. (Section 3-2.)
2. Remove pedestal mount cap screws (1) from pedestal mounts and pull out LED lights (2).
3. Disconnect connectors from LED lights on rear engine harness (3).
4. Install new LED lights back into pedestal mounts and install pedestal mount cap screws.
5. Connect connectors to LED lights on rear engine harness.
6. Close engine cover.

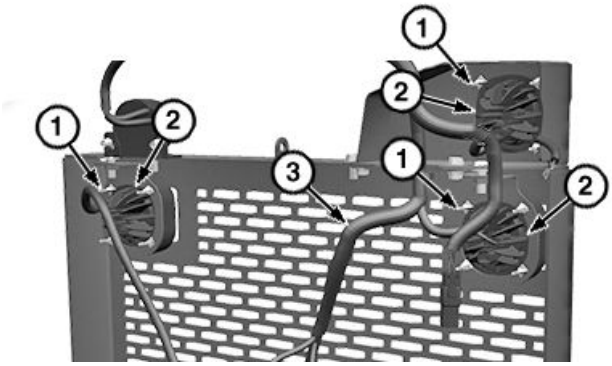

TX1250181A —UN—12JAN18

Rear LED Lights

1— Pedestal Mount Cap Screw (12 used)

2— Light-Emitting Diode (LED) Light (3 used)

3— Rear Engine Harness

JS90457,0000163 -19-31JAN18-2/2

Adding Rear Counterweights

There are three optional sets of counterweights that can be added to machine.

Use a suitable lifting device to put each counterweight on machine.

Specification

Counterweight—Weight (each)	39 kg 86 lb

1. Line up counterweight holes with three threaded holes on machine.

NOTE: For the top two cap screws, place spacers between the counterweight and machine frame.

2. Install spacers and tighten M16 x 70 mm flange cap screws (1).
3. Stack second counterweight on first counterweight and line up holes.
4. Install M16 x 120 mm flange cap screws (2) and tighten with nuts.
5. Stack third counterweight on second counterweight and line up holes.
6. Install M16 x 120 mm flange cap screws (3) and tighten with nuts.

1— M16 x 70 mm Flange Cap Screw (3 used)
2— M16 x 120 mm Flange Cap Screw (2 used)
3— M16 x 120 mm Flange Cap Screw (3 used)

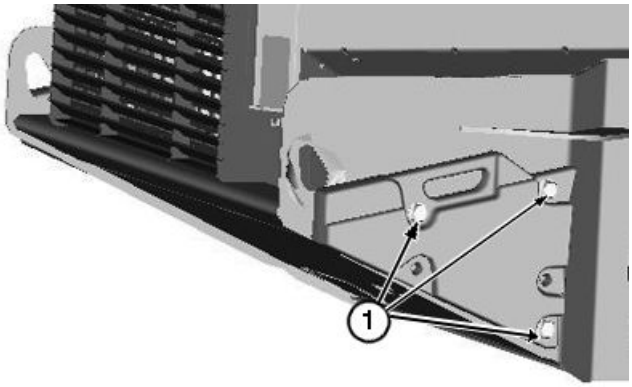

TX1139474 —UN—27JUN13

One Counterweight

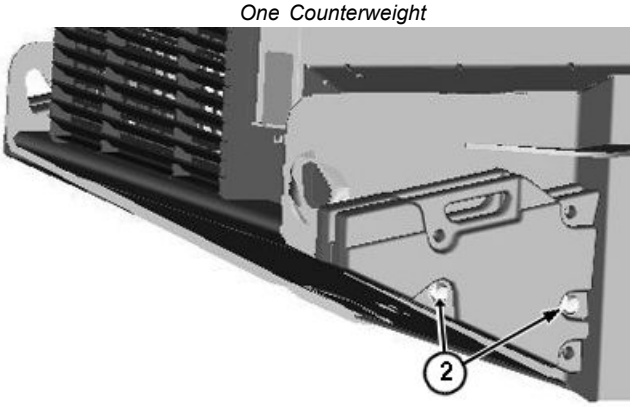

TX1139475 —UN—27JUN13

Two Counterweights

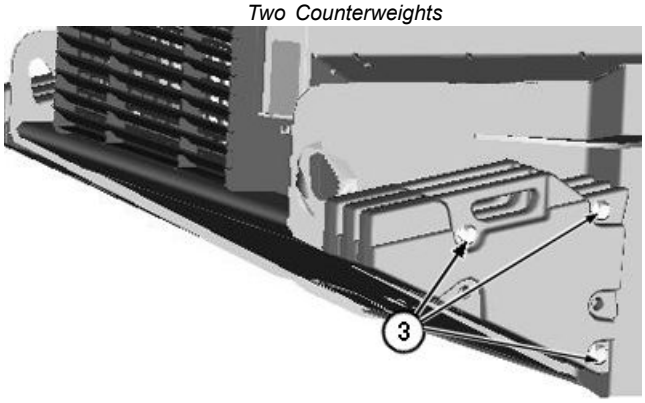

TX1139476 —UN—27JUN13

Three Counterweights

JK47244,00002DE -19-01FEB18-1/1

Replacing Accessory Drive Belt

With Air Conditioning

1. Check belt (1) regularly for wear, especially for cracks at the bottom of grooves and for frayed edges.
2. Install a 3/8 in drive socket wrench to the belt tension adjuster (2). Turn wrench to pull tension adjuster pulley away from belt, releasing belt tension.
3. Hold tension adjuster away from belt while removing old belt and installing new belt.
4. Slowly release wrench tension to allow tension adjuster to move against new belt. Tension is automatically adjusted.
5. Remove wrench.
6. Start engine and check belt alignment.

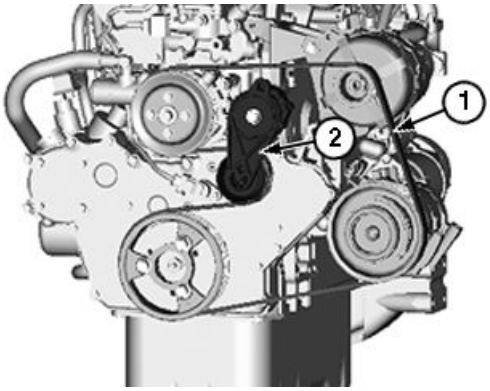

TX1140226 —UN—15AUG13

With Air Conditioning

1— Belt **2— Belt Tension Adjuster**

JK47244,0000320 -19-23JAN25-1/2

Without Air Conditioning

1. Check belt (1) regularly for wear, especially for cracks at the bottom of grooves and for frayed edges.
2. Check belt tension by depressing the midpoint between the alternator pulley (2) and crankshaft pulley (3) with thumb. Deflection (4) must be within specification.

Specification	
Belt—Deflection (4)	6 mm (0.23 in)
Belt—Depressing Force	44 N (10 lbf)

3. If tension is not within specification, loosen cap screws on top and bottom of alternator.
4. Move alternator forward or backwards by turning adjusting cap screw (5). Adjust until tension meets specification.
5. Tighten cap screws on top and bottom of alternator to specification.

Specification	
Cap screw—Torque	37 N·m (27 lb·ft)

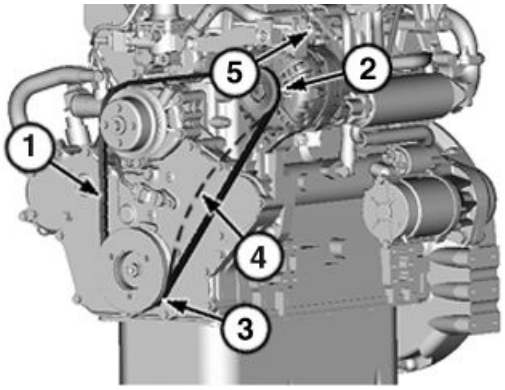

TX1140236 —UN—10JUL13

Without Air Conditioning

1— Belt
2— Alternator Pulley
3— Crankshaft Pulley
4— Deflection
5— Adjusting Cap Screw

JK47244,0000320 -19-23JAN25-2/2

Replacing Seat Belt

NOTE: Shoulder belt remove and install procedure shown. Lap belt procedure is similar.

1. Prepare machine for maintenance. See Prepare Machine for Maintenance (3-2).
2. Remove shoulder belt lower anchor cap screw (1).
3. Lower operator's station.
4. Slide seat forward.
5. Remove left seat belt-to-seat cap screw (2).

1— Shoulder Belt Lower Anchor Cap Screw

2— Left Seat Belt-to-Seat Cap Screw

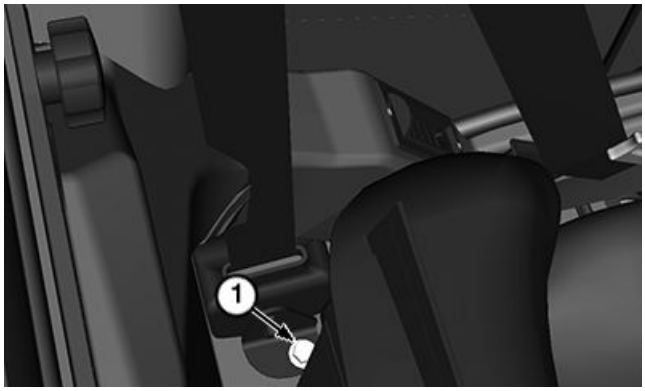

TX1215867 —UN—17MAY16

Lower Shoulder Belt Anchor Cap Screw

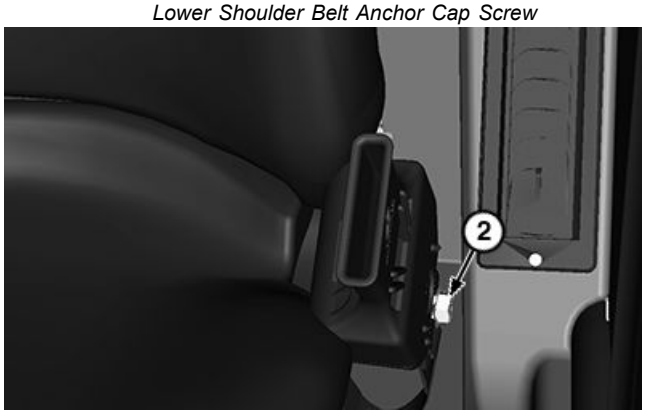

TX1215869 —UN—17MAY16

Seat Belt Anchor

Continued on next page

JB38880,0001155 -19-07MAR24-1/2

6. Remove right seat belt latch-to-seat anchor nut (3).
7. Remove shoulder belt upper anchor nut (4).
8. Remove seat belt.
9. Clean and inspect parts. Repair or replace as necessary.
10. Install right seat belt latch-to-seat anchor nut (3) and tighten to specification.

Specification

Right Seat Belt Latch-to-Seat Anchor Nut—Torque.....68 N·m
50 lb·ft

11. Install left seat belt-to-seat cap screw (2) and tighten to specification.

Specification

Left Seat Belt-to-Seat Cap Screw—Torque.....68 N·m
50 lb·ft

12. Install shoulder belt upper anchor nut (4) and tighten to specification.

Specification

Shoulder Belt Upper Anchor Nut—Torque.....50 N·m
37 lb·ft

13. Install shoulder belt lower anchor cap screw (1) and tighten to specification.

Specification

Shoulder Belt Lower Anchor Cap Screw—Torque.....68 N·m
50 lb·ft

Seat Belt Latch

TX1215865 —UN—17MAY16

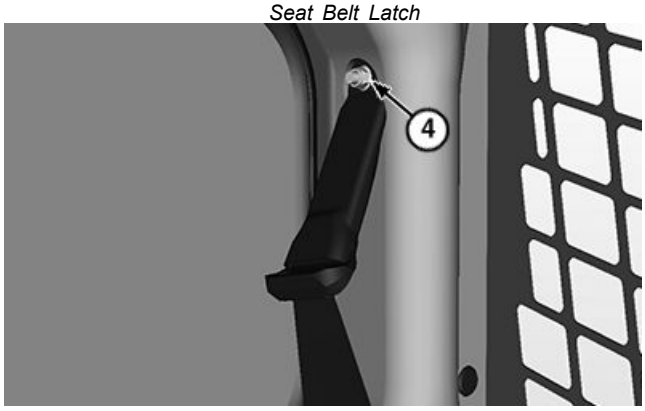

Shoulder Belt Upper Anchor

TX1215863 —UN—17MAY16

3— Right Seat Belt Latch-to-Seat Anchor Nut

4— Shoulder Belt Upper Anchor Nut

14. Lower operator's station.

JB38880,0001155 -19-07MAR24-2/2

Replacing Fuses

The fuse blocks are located inside the operator's station on the left and right side of the operator's seat. Remove retainer clips (1) and covers (2) to access fuse blocks.

Fuses protect all electrical circuits. Amperage rating is marked on each fuse and fuses are color coded to ensure proper replacement. Fuse and circuit identification is provided in the following illustration.

IMPORTANT: Install fuse with correct amperage rating to prevent electrical system damage from overload. DO NOT replace original fuse with higher rated fuse.

If original size fuse continues to blow, have the electrical system checked by an authorized John Deere dealer.

Amperage Rating	Color
1	Black
3	Violet
4	Pink
5	Tan
7.5	Brown
10	Red
15	Light Blue
20	Yellow
25	Natural (white)
30	Light Green

TX1216773 —UN—02JUN16

Fuse Block Covers

1— Retainer Clip (2 used) **2— Cover (2 used)**

Continued on next page

DB84312,0000235 -19-14JAN23-1/5

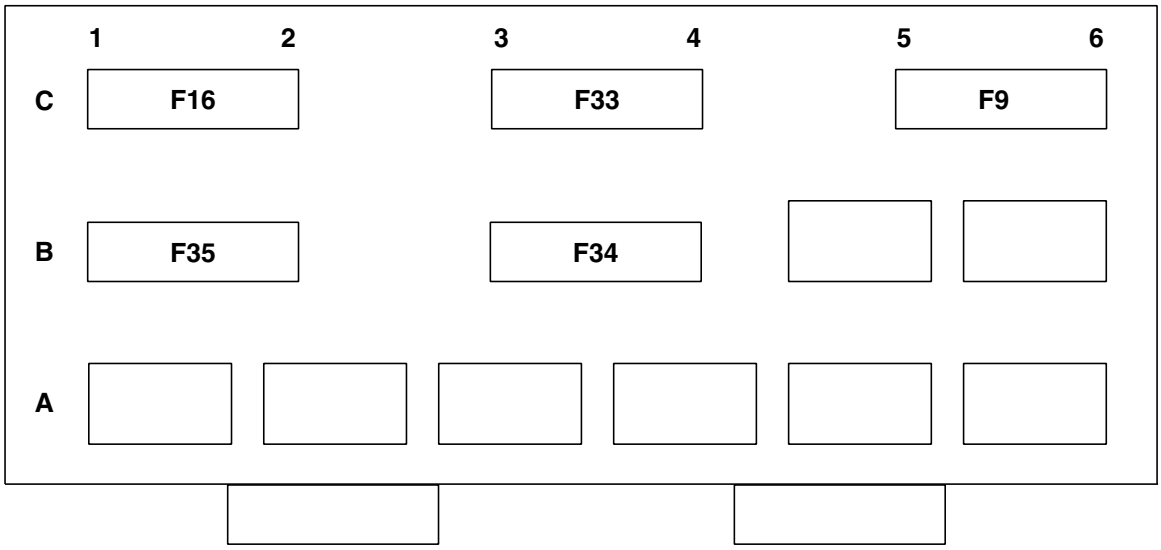

TX1250971 —UN—30JAN18

TX1250971

Main Harness Fuse Block Left 2 (X80)

F9— Seat 10 A Fuse
F16— Horn 10 A Fuse
F33— Rear Camera 5 A Fuse
F34— JDLink™ Switched Power 5 A Fuse
F35— JDLink™ Unswitched Power 5 A Fuse

JDLink is a trademark of Deere & Company

Continued on next page

DB84312,0000235 -19-14JAN23-2/5

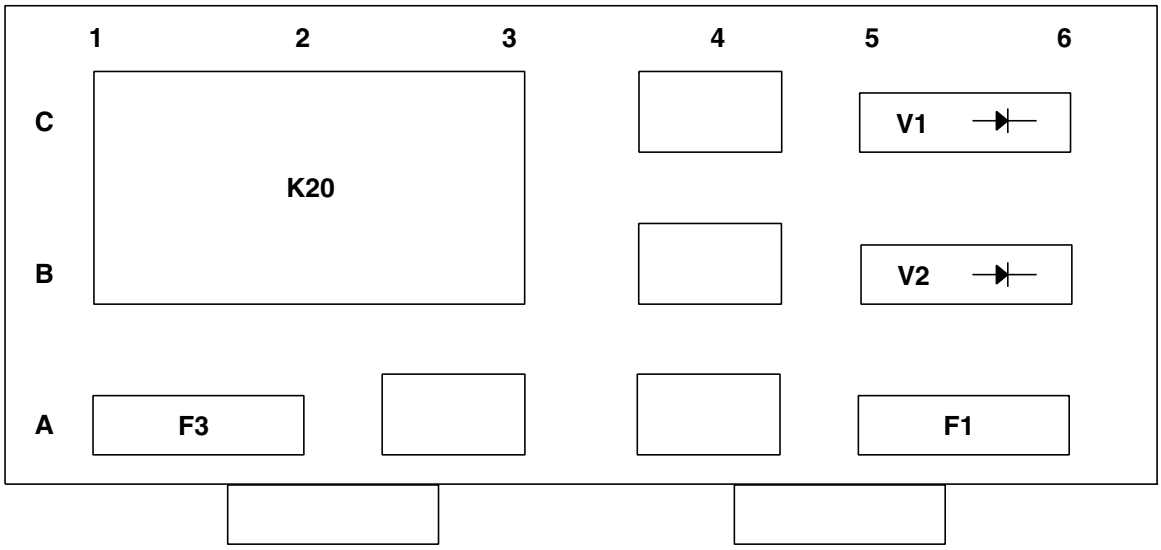

TX1321200 —UN—24FEB22

TX1321200

Main Harness Fuse Block Left 1 (X81)

F1— Unswitched Power 7.5 A Fuse
F3— Engine Control Unit (ECU) Unswitched Power 25 A Fuse
K20— Engine Control Unit (ECU) Relay
V1— Remote Start Diode
V2— Polarity Sensing Diode

Continued on next page

DB84312,0000235 -19-14JAN23-3/5

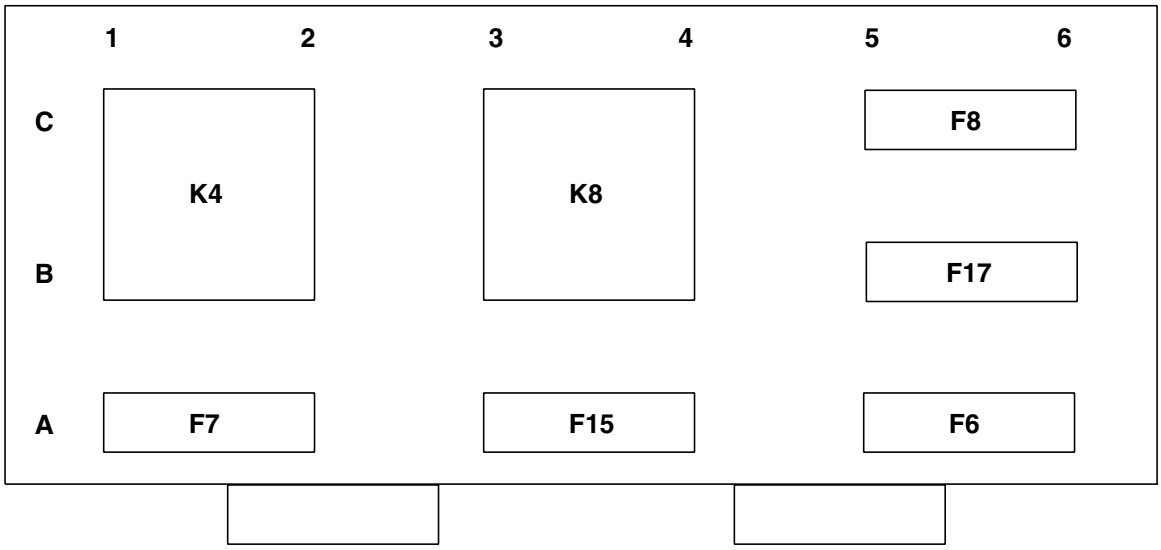

TX1250974 —UN—30JAN18

TX1250974

Main Harness Fuse Block Right 1 (X82)

F6— Lights 25 A Fuse
F7— Accessory 20 A Fuse
F8— Air Conditioner and Heater 30 A Fuse
F15— Switched Power 20 A Fuse
F17— Handle Switches 5 A Fuse
K4—Accessory Relay
K8—Switched Power Relay

Continued on next page

DB84312,0000235 -19-14JAN23-4/5

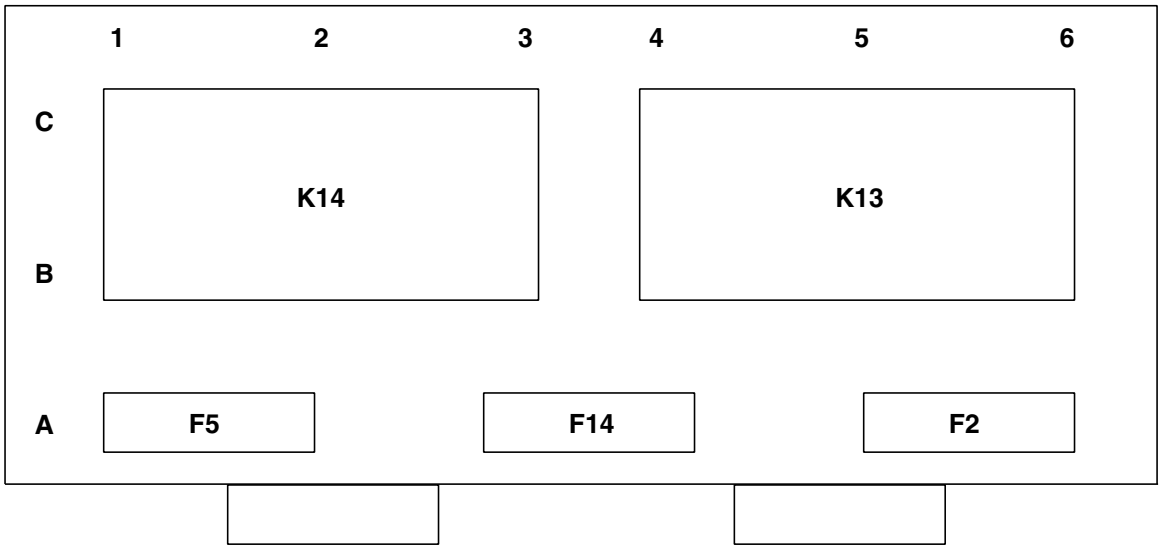

TX1250975 —UN—30JAN18

TX1250975

Main Harness Fuse Block Right 2 (X84)

F2— Monitor Unswitched Power 10 A Fuse
F5— Dome Light and Accessory Power Outlet 10 A Fuse
F14— Quik-Tatch™ 30 A Fuse
K13— Quik-Tatch™ Relay (lock)
K14— Quik-Tatch™ Relay (unlock)

NOTE: The following items are located outside the fuse blocks.

F10—Left flasher light in-line 5 A fuse

F11—Right flasher light in-line 5 A fuse

F12—Radio in-line 3 A fuse

F19—Beacon in-line 5 A fuse

F31—Glow plug 80 A fuse

K1—Starter relay

K2—Glow plug relay

K5—Dual flasher relay

K6—Work light relay

K16—Blower motor (low speed) relay

K17—Blower motor (medium low speed) relay

K18—Blower motor (medium high speed) relay

K19—Blower motor (high speed) relay

V4—Start signal diode

V6—Left handle diode

V7—Attachment control harness 5-diode pack

V9—Dome light diode

V13—Air conditioner compressor clutch diode

Quik-Tatch is a trademark of Deere & Company

DB84312,0000235 -19-14JAN23-5/5

Replacing Glow Plug Fuse

1. Park machine on level surface.
2. Raise and lock operator's station. See Raising Operator’s Station. (Section 3-2.)
3. Pull fuse out of socket.
4. Check metal clip in fuse window. Discard fuse if clip is broken.
5. Ensure that the new fuse is the same amperage as the removed fuse. Push new fuse into socket.
6. Lower operator's station.

F31— Glow Plug 80 A Fuse

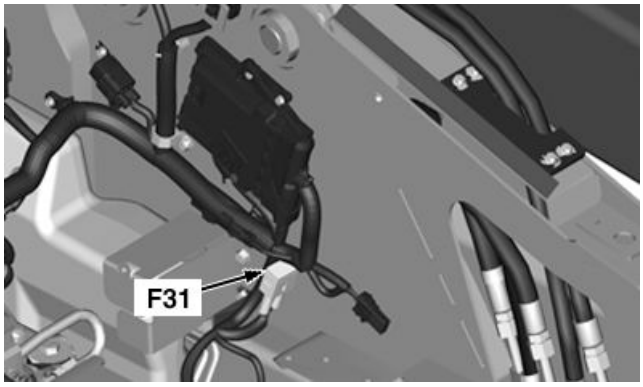

TX1251775A —UN—02FEB18

Glow Plug Fuse (components removed for clarity)

DB84312,0000238 -19-02FEB18-1/1

Track Sag General Information

To maximize undercarriage life, keep track sag within specification. Tracks may require adjustment several times during a working day due to changing soil type and moisture content.

Adjust tracks in the actual operating conditions.

TIGHT TRACK: Packing causes a tight track. If material packs in the undercarriage, adjust tracks with the material packed in the components.

While the track spring will recoil and the machine can continue to operate with a tight track, continued operation will result in excessive pin and bushing wear, sprocket popping, tooth tip wear, and excessive loads on the entire undercarriage and travel drive system.

Machine productivity and fuel consumption are also adversely affected because increased horsepower is needed to move the machine.

LOOSE TRACK: A loose track has more side to side motion, increasing side wear on the links, rollers, and front idler. An excessively loose track will slap at high ground speeds, resulting in high impact loads on the sprocket teeth, bushings, and carrier rollers.

VD76477,00001F7 -19-28AUG09-1/1

Hardware Torque Specifications

Check cap screws and nuts to be sure they are tight. If hardware is loose, tighten to torque shown on the following charts unless a special torque is specified.

TX,90,FF1225 -19-16JAN08-1/1

Unified Inch Bolt and Screw Torque Values

TS1671 —UN—01MAY03

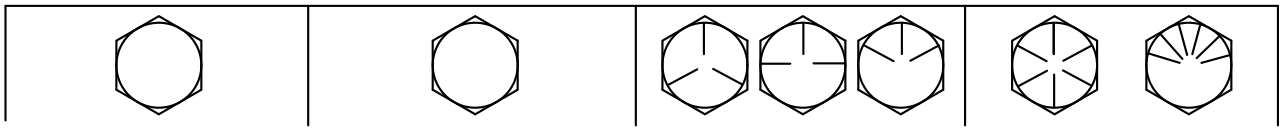

Bolt or Screw Size	SAE Grade 1[a]				SAE Grade 2[b]				SAE Grade 5, 5.1 or 5.2				SAE Grade 8 or 8.2			
	Hex Head[c]		Flange Head[d]		Hex Head[c]		Flange Head[d]		Hex Head[c]		Flange Head[d]		Hex Head[c]		Flange Head[d]	
	N·m	lb·in	N·m	lb·in	N·m	lb·in	N·m	lb·in	N·m	lb·in	N·m	lb·in	N·m	lb·in	N·m	lb·in
1/4	3.1	27.3	3.2	28.4	5.1	45.5	5.3	47.3	7.9	70.2	8.3	73.1	11.2	99.2	11.6	103
													N·m	lb·ft	N·m	lb·ft
5/16	6.1	54.1	6.5	57.7	10.2	90.2	10.9	96.2	15.7	139	16.8	149	22.2	16.4	23.7	17.5
									N·m	lb·ft	N·m	lb·ft				
3/8	10.5	93.6	11.5	102	17.6	156	19.2	170	27.3	20.1	29.7	21.9	38.5	28.4	41.9	30.9
					N·m	lb·ft	N·m	lb·ft								
7/16	16.7	148	18.4	163	27.8	20.5	30.6	22.6	43	31.7	47.3	34.9	60.6	44.7	66.8	49.3
	N·m	lb·ft	N·m	lb·ft												
1/2	25.9	19.1	28.2	20.8	43.1	31.8	47	34.7	66.6	49.1	72.8	53.7	94	69.3	103	75.8
9/16	36.7	27.1	40.5	29.9	61.1	45.1	67.5	49.8	94.6	69.8	104	77	134	98.5	148	109
5/8	51	37.6	55.9	41.2	85	62.7	93.1	68.7	131	96.9	144	106	186	137	203	150
3/4	89.5	66	98	72.3	149	110	164	121	230	170	252	186	325	240	357	263
7/8	144	106	157	116	144	106	157	116	370	273	405	299	522	385	572	422
1	216	159	236	174	216	159	236	174	556	410	609	449	785	579	860	634
1-1/8	305	225	335	247	305	225	335	247	685	505	751	554	1110	819	1218	898
1-1/4	427	315	469	346	427	315	469	346	957	706	1051	775	1552	1145	1703	1256
1-3/8	564	416	618	456	564	416	618	456	1264	932	1386	1022	2050	1512	2248	1658
1-1/2	743	548	815	601	743	548	815	601	1665	1228	1826	1347	2699	1991	2962	2185

The nominal torque values listed are for general use only with the assumed wrenching accuracy of 20%, such as a manual torque wrench.
DO NOT use these values if a different torque value or tightening procedure is given for a specific application.
For lock nuts, for stainless steel fasteners, or for nuts on U-bolts, see the tightening instructions for the specific application.

Replace fasteners with the same or higher property class. If higher property class fasteners are used, tighten these to the strength of the original.

- Make sure that fastener threads are clean.
- Apply a thin coat of Hy-Gard™ or equivalent oil under the head and on the threads of the fastener, as shown in the following image.
- Be conservative with the amount of oil to reduce the potential for hydraulic lockup in blind holes due to excessive oil.
- Properly start thread engagement.

TS1741 —UN—22MAY18

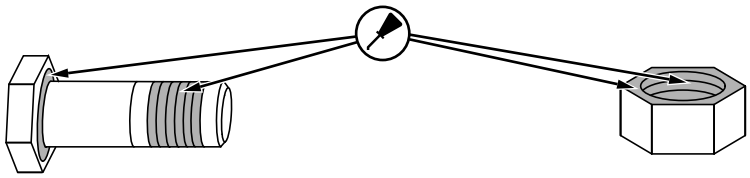

[a]*Grade 1 applies for hex cap screws over 6 in (152 mm) long, and for all other types of bolts and screws of any length.*
[b]*Grade 2 applies for hex cap screws (not hex bolts) up to 6 in (152 mm) long.*
[c]*Hex head column values are valid for ISO 4014 and ISO 4017 hex head, ISO 4162 hex socket head, and ISO 4032 hex nuts.*
[d]*Hex flange column values are valid for ASME B18.2.3.9M, ISO 4161, or EN 1665 hex flange products.*

DX,TORQ1 -19-09MAY22-1/1

Metric Bolt and Screw Torque Values

TS1742 —UN—31MAY18

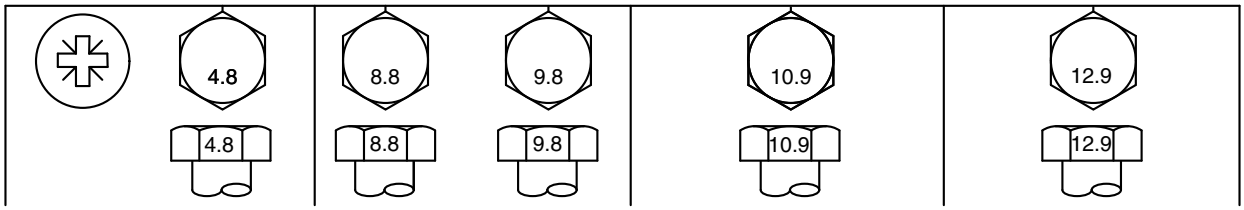

Bolt or Screw Size	Class 4.8				Class 8.8 or 9.8				Class 10.9				Class 12.9			
	Hex Head[a]		Flange Head[b]		Hex Head[a]		Flange Head[b]		Hex Head[a]		Flange Head[b]		Hex Head[a]		Flange Head[b]	
	N·m	lb·in	N·m	lb·in	N·m	lb·in	N·m	lb·in	N·m	lb·in	N·m	lb·in	N·m	lb·in	N·m	lb·in
M6	3.6	31.9	3.9	34.5	6.7	59.3	7.3	64.6	9.8	86.7	10.8	95.6	11.5	102	12.6	112
									N·m	lb·ft	N·m	lb·ft	N·m	lb·ft	N·m	lb·ft
M8	8.6	76.1	9.4	83.2	16.2	143	17.6	156	23.8	17.6	25.9	19.1	27.8	20.5	30.3	22.3
			N·m	lb·ft	N·m	lb·ft	N·m	lb·ft								
M10	16.9	150	18.4	13.6	31.9	23.5	34.7	25.6	46.8	34.5	51	37.6	55	40.6	60	44.3
	N·m	lb·ft														
M12	—	—	—	—	55	40.6	61	45	81	59.7	89	65.6	95	70.1	105	77.4
M14	—	—	—	—	87	64.2	96	70.8	128	94.4	141	104	150	111	165	122
M16	—	—	—	—	135	99.6	149	110	198	146	219	162	232	171	257	190
M18	—	—	—	—	193	142	214	158	275	203	304	224	322	245	356	263
M20	—	—	—	—	272	201	301	222	387	285	428	316	453	334	501	370
M22	—	—	—	—	365	263	405	299	520	384	576	425	608	448	674	497
M24	—	—	—	—	468	345	518	382	666	491	738	544	780	575	864	637
M27	—	—	—	—	683	504	758	559	973	718	1080	797	1139	840	1263	932
M30	—	—	—	—	932	687	1029	759	1327	979	1466	1081	1553	1145	1715	1265
M33	—	—	—	—	1258	928	1398	1031	1788	1319	1986	1465	2092	1543	2324	1714
M36	—	—	—	—	1617	1193	1789	1319	2303	1699	2548	1879	2695	1988	2982	2199

The nominal torque values listed are for general use only with the assumed wrenching accuracy of 20%, such as a manual torque wrench.
DO NOT use these values if a different torque value or tightening procedure is given for a specific application.
For lock nuts, for stainless steel fasteners, or for nuts on U-bolts, see the tightening instructions for the specific application.

Replace fasteners with the same or higher property class. If higher property class fasteners are used, tighten these to the strength of the original.

- Make sure that fastener threads are clean.
- Apply a thin coat of Hy-Gard™ or equivalent oil under the head and on the threads of the fastener, as shown in the following image.
- Be conservative with the amount of oil to reduce the potential for hydraulic lockup in blind holes due to excessive oil.
- Properly start thread engagement.

TS1741 —UN—22MAY18

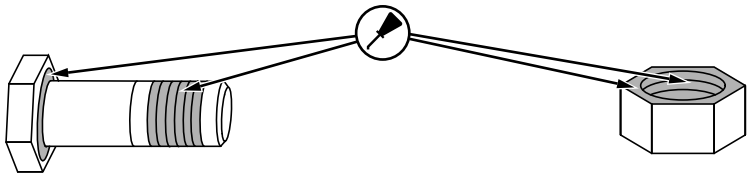

[a]*Hex head column values are valid for ISO 4014 and ISO 4017 hex head, ISO 4162 hex socket head, and ISO 4032 hex nuts.*
[b]*Hex flange column values are valid for ASME B18.2.3.9M, ISO 4161, or EN 1665 hex flange products.*

DX,TORQ2 -19-09MAY22-1/1

Operational Checkout

Use this procedure to perform a quick check of machine operation by doing a walk-around inspection and performing specific checks from the operator's seat.

Complete visual checks (oil levels, oil condition, external leaks, loose hardware, linkage, wiring, etc.) before performing checkout.

Most checks require machine to be on a level surface with adequate space to operate functions. Systems should be at normal operating temperatures. Some checks may require varied surfaces.

No special tools are necessary to perform checkout.

If no problem is found, go to next check. If a problem is indicated, an additional check or repair procedure is suggested.

DB84312,000023D -19-26AUG19-1/43

Diagnostic Trouble Code Check

DB84312,000023D -19-26AUG19-2/43

Display and Clear Diagnostic Trouble Codes	**Always check for diagnostic trouble codes (DTCs) and correct them before performing operational checkout.** Check for active and stored DTCs. DTCs can be displayed by using one of the following methods: • Engagement and monitor unit (EMU) - To access DTCs using EMU, see Codes (EMU). (Section 2-3.) • Service ADVISOR™ diagnostic application *LOOK: Are DTCs present?*	**YES:** Correct all DTCs before proceeding. **NO:** Go to next check.

Service ADVISOR is a trademark of Deere & Company

DB84312,000023D -19-26AUG19-3/43

Operational Checks—Switched Power OFF, Engine OFF Checks

DB84312,000023D -19-26AUG19-4/43

Periodic Maintenance Decal Check	Check periodic maintenance decal check. *LOOK: Is periodic maintenance decal legible?*	**YES:** Go to next check. **NO:** Replace decal.

DB84312,000023D -19-26AUG19-5/43

Cab Door and Window Seals Check (if equipped)	Open and close cab door and windows. Inspect seals. *LOOK/FEEL: Do cab door and windows seal properly?* *LOOK/FEEL: Do cab door and windows latch properly?*	**YES:** Go to next check. **NO:** Adjust door and windows to close against seals properly. Replace seals as necessary. **NO:** Adjust or replace latches as necessary.

Continued on next page

DB84312,000023D -19-26AUG19-6/43

Seat Belt Check	Latch seat belt. *LISTEN: Is a "click" heard when seat belt is latched?* *FEEL/LOOK: Does seat belt remain latched?*	**YES:** Go to next check. **NO:** See Use and Maintain Seat Belt. (Section 1-3.)

DB84312,000023D -19-26AUG19-7/43

Horn Circuit Check	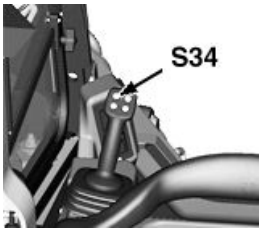 TX1215154A —UN—03MAY16 *Horn Switch* **S34— Horn Switch** Press horn switch (S34). *LISTEN: Does horn sound?*	**YES:** Go to next check. **NO:** Check unswitched power 7.5 A fuse (F1). **NO:** Check horn 10 A fuse (F16). IF OK: See an authorized John Deere dealer.

DB84312,000023D -19-26AUG19-8/43

Seat Control Check	*NOTE: For seat adjustment procedures, see Operator Seat. (Section 2-1.)* Does seat angle change easily? Does lever move easily to unlock seat support? Does seat move forward and backward easily? Does lever lock seat support in position when released? Does seat lumbar knob (if equipped) turn easily? Does seat raise and lower easily while pressing button (if equipped) in front of seat? Does lever unlock and lock easily to hold seat back in position?	**YES:** Go to next check. **NO:** Inspect linkage and repair.

Continued on next page

DB84312,000023D -19-26AUG19-9/43

Engagement and Monitor Unit (EMU) Circuits Check

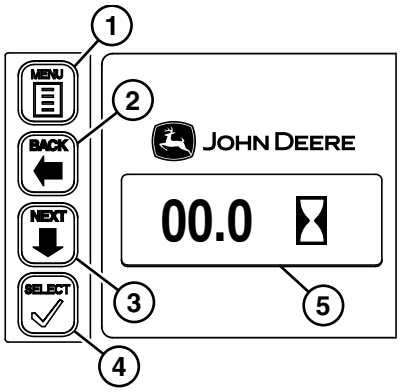

TX1126613 —UN—26NOV12

EMU Display

1— MENU Button
2— BACK Button
3— NEXT Button
4— SELECT Button
5— EMU Display

Sit in operator's seat.

LOOK: Do all EMU display segments turn on, turn off, display TMC BY DEERE for 2 seconds, display correct machine model and speed setting for 2 seconds, and then display the hour meter?

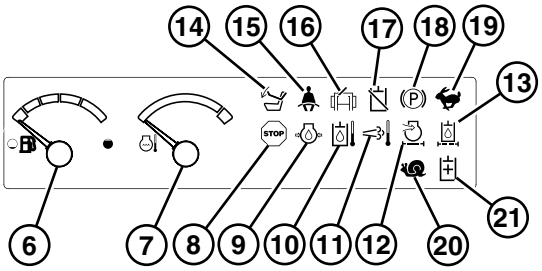

TX1127054 —UN—03DEC12

EMU Display

6— Fuel Gauge
7— Engine Coolant Temperature Gauge
8— STOP Indicator
9— Engine Low Oil Pressure Indicator
10— Hydraulic Oil Temperature Indicator
11— Exhaust Filter Cleaning Indicator (not used)
12— Engine Air Filter Restriction Indicator
13— Hydraulic Oil Filter Restriction Indicator
14— Interlocking Seat Bar Switch Indicator
15— Seat Belt Switch Indicator
16— Cab Door Switch Indicator
17— Hydraulics OFF Indicator
18— Park Brake Indicator
19— Two-Speed Indicator
20— Creep Mode Indicator
21— Hydraulic High Flow Indicator

LOOK: Do all indicators illuminate and then go out depending on machine status?

YES: Go to next check.

Continued on next page

	Lower interlocking seat bar.	**NO:** Check monitor unswitched power 10 A fuse (F2).
	LOOK: Does interlocking seat bar switch indicator (14) go off?	IF OK: See an authorized John Deere dealer.

DB84312,000023D -19-26AUG19-11/43

Battery Check	Sit in operator's seat.	**YES:** Go to next check.
	Observe battery voltage from operator's seat on the engagement monitor unit (EMU) using SELECT button.	**NO:** Clean and tighten battery terminals. Charge battery. See Using Battery Charger (Section 4-1.)
	LOOK: Does battery have a minimum of 12 volts when engine is not running?	IF OK: See an authorized John Deere dealer.

DB84312,000023D -19-26AUG19-12/43

Operational Checks—Switched Power ON, Engine OFF Checks

DB84312,000023D -19-26AUG19-13/43

EMU Circuits Check	Turn key switch ON or press engine start switch on sealed switch module (SSM), if equipped.	
	LOOK: Do gauges move to the far right position, then move to the center position, and then display the machine status?	**YES:** Go to next check.
	LOOK: Do switches on instrument panel illuminate?	**NO:** Check unswitched power 7.5 A fuse (F1).
	LISTEN: Does EMU alarm sound?	**NO:** Check monitor unswitched power 10 A fuse (F2).
	Close cab door (if equipped).	**NO:** Check switched power 20 A fuse (F15).
	LOOK: Does the cab door indicator go off?	IF OK: See an authorized John Deere dealer.

Continued on next page

DB84312,000023D -19-26AUG19-14/43

Lights Circuit Check	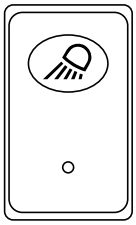 TX1125104 —UN—02NOV12 *Work Light Switch* Press work light switch to the middle position. *LOOK: Do front work lights and taillights come on?*	**YES:** Go to next check. **NO:** Check lights 25 A fuse (F6). **NO:** Check work light relay (K6). **NO:** Check unswitched power 7.5 A fuse (F1). IF OK: See an authorized John Deere dealer.

DB84312,000023D -19-26AUG19-15/43

Lights Circuit Check (continued)	Press work light switch to the upper position. *LOOK: Do front work lights and taillights stay on and rear work light come on?*	**YES:** Go to next check. **NO:** See an authorized John Deere dealer.

DB84312,000023D -19-26AUG19-16/43

Dual Flasher Light Check (if equipped)	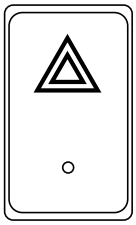 TX1125311 —UN—06NOV12 *Dual Flasher Light Switch* Press dual flasher light switch to the upper position. *LOOK: Do the dual flashers come on?*	**YES:** Go to next check. **NO:** Check left flasher light in-line 5 A fuse (F10). Check right flasher light in-line 5 A fuse (F11). Check switched power 20 A fuse (F15). IF OK: See an authorized John Deere dealer.

Continued on next page

DB84312,000023D -19-26AUG19-17/43

Windshield Wiper Circuit Check (if equipped)	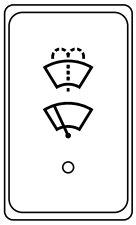 TX1125050 —UN—02NOV12 *Windshield Wiper and Washer Switch* Close cab door (if equipped). Press windshield wiper and washer switch to the middle position. *LOOK: Does wiper operate?*	**YES:** Go to next check. **NO:** Check accessory 20 A fuse (F7). **NO:** Check accessory relay (K4). **NO:** Check unswitched power 7.5 A fuse (F1). IF OK: See an authorized John Deere dealer.

DB84312,000023D -19-26AUG19-18/43

Windshield Washer Circuit Check (if equipped)	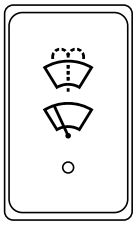 TX1125050 —UN—02NOV12 *Windshield Wiper and Washer Switch* Close cab door (if equipped). Turn on windshield wiper. Press and hold windshield wiper and washer switch in the upper position. **IMPORTANT: Avoid damage to washer motor. Washer motor may be damaged if washer switch is held for more than 20 seconds or continually operated with no fluid in the washer fluid tank.** *LOOK: Does washer operate?*	**YES:** Go to next check. **NO:** Check washer fluid level. **NO:** Check washer hose for kinks or obstructions. **NO:** Check accessory 20 A fuse (F7). **NO:** Check unswitched power 7.5 A fuse (F1). IF OK: See an authorized John Deere dealer.

DB84312,000023D -19-26AUG19-19/43

Rear Camera Display Check	Press engine start switch on sealed switch module (SSM). Observe rear camera display. *LOOK: Does the rear camera display show real-time video of objects behind the machine?*	**YES:** Go to next check. **NO:** Check rear camera 5 A fuse (F33). **NO:** Check monitor unswitched power 10 A fuse (F2). IF OK: See an authorized John Deere dealer.

Continued on next page

DB84312,000023D -19-26AUG19-20/43

Operational Checks—Switched Power ON, Engine ON Checks

DB84312,000023D -19-26AUG19-21/43

Engine Start Check	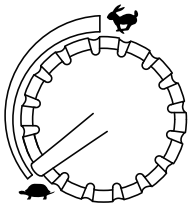 TX1126582 —UN—26NOV12 *Engine Speed Control Dial* Position the engine speed control dial in the slow idle position. Start engine. *LISTEN/LOOK: Does engine speed increase briefly and then return to slow idle?*	**YES:** Go to next check. **NO:** Check slow idle and fast idle engine speeds.

DB84312,000023D -19-26AUG19-22/43

Engine Idle Check	Position engine speed control dial in the slow idle position. *LISTEN: Does engine idle poorly?*	**YES:** Check primary fuel filter and water separator. See Check and Drain Primary Fuel Filter and Water Separator (Section 3-3.) **YES:** Test diesel fuel. See Testing Diesel Fuel. (Section 3-1.) **YES:** Check for air leaks on suction side of air intake system. **NO:** Go to next check. IF OK: See an authorized John Deere dealer.

DB84312,000023D -19-26AUG19-23/43

Engine Speed Check	Set engagement and monitor unit (EMU) to display engine rpm. Set engine speed at slow idle with engine speed control dial and engine speed control pedal released. *LOOK/LISTEN: Does engine run between 1150—1250 rpm?* Rotate engine speed control dial to set the engine speed at fast idle. Engine speed control pedal must be released. *NOTE: Upon initial start-up, there may be a delayed increase in engine speed once the request for engine speed increase is given.* *LOOK/LISTEN: Does engine run between 2650—2750 rpm?* Fully depress engine speed control pedal to set engine speed at fast idle. Engine speed control dial must be in the slow idle position. *LOOK/LISTEN: Does engine run between 2650—2750 rpm?*	**YES:** Go to next check. **NO:** Check engine speed control dial (B18) and engine speed control pedal (B19). IF OK: See an authorized John Deere dealer.

Continued on next page

DB84312,000023D -19-26AUG19-24/43

Auto-Idle Circuit Check (if equipped)	Verify auto-idle operation. See Auto-Idle (EMU). (Section 2-3.) *LOOK/LISTEN: Does auto-idle function properly?*	**YES:** Go to next check. **NO:** See an authorized John Deere dealer.

DB84312,000023D -19-26AUG19-25/43

Hydraulic Control Enable Check	Close cab door (if equipped). Position engine speed control dial in the slow idle position. Engage park brake. Actuate boom and bucket functions. *LOOK: Do boom and bucket move?*	**NO:** Go to next step in this check. **YES:** See an authorized John Deere dealer.
	Press hydraulic enable switch on sealed switch module (SSM) to enable hydraulics. Actuate boom and bucket functions. *LOOK: Do boom and bucket move?*	**YES:** Go to next check. **NO:** See an authorized John Deere dealer.

DB84312,000023D -19-26AUG19-26/43

Power Quik-Tatch™ Check (if equipped)	 TX1125100 —UN—02NOV12 *Quik-Tatch Switch* **IMPORTANT: Avoid damage to Quik-Tatch™ motor. Damage to Quik-Tatch motor occurs if motor is immersed in liquid. Do not immerse in liquid.** Close cab door (if equipped). Press and hold lower part of Quik-Tatch switch to unlock the Quik-Tatch latches. *LOOK/LISTEN: Do Quik-Tatch latches release attachment?* Press and hold upper part of Quik-Tatch switch to lock the Quik-Tatch latches. *LOOK/LISTEN: Do Quik-Tatch latches secure attachment?*	**YES:** Go to next check. **NO:** Check Quik-Tatch™ 30 A fuse (F14), switched power 20 A fuse (F15), and accessory 20 A fuse (F7). IF OK: See an authorized John Deere dealer.

Quik-Tatch is a trademark of Deere & Company

Continued on next page

DB84312,000023D -19-26AUG19-27/43

Backup Alarm Check

CAUTION: Prevent injury from unexpected machine movement. Keep bystanders clear of machine.

Set engine speed at slow idle.

Drive machine in reverse.

LOOK/LISTEN: Does backup alarm sound?

YES: Go to next check.

NO: Check switched power 20 A fuse (F15) and unswitched power 7.5 A fuse (F1).

IF OK: See an authorized John Deere dealer.

DB84312,000023D -19-26AUG19-28/43

Steering Mistracking Check

CAUTION: Prevent injury from unexpected machine movement. Keep bystanders clear of machine.

Position engine speed control dial in the fast idle position.

Drive machine at full speed forward on a flat and level surface for 30.5 m (100 ft).

Repeat procedure for reverse direction.

Observe which direction and how much the machine mistracks from a straight line.

LOOK: Does machine mistrack more than the width of the machine over 30.5 m (100 ft)?

YES: See an authorized John Deere dealer.

NO: Go to next check.

DB84312,000023D -19-26AUG19-29/43

Two-Speed Check (if equipped)

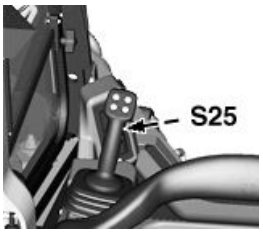

TX1215163A —UN—03MAY16

Two-Speed Switch

S25— Two-Speed Switch

CAUTION: Prevent injury from unexpected machine movement. Keep bystanders clear of machine.

NOTE: Two-speed mode will not activate if creep mode is enabled.

Position engine speed control dial in the slow idle position.

Drive machine forward on a flat and level surface.

Press two-speed switch (S25) to activate fast speed mode.

NOTE: For wheeled machines, downshift requires machine to be stopped and park brake to be set if hydraulic oil temperature is less than 40°C (105°F). Once hydraulic oil temperature is 40°C (105°F) or greater, downshift is allowed without stopping machine and applying park brake.

Press two-speed switch to activate slow speed mode.

LOOK/FEEL: Does machine accelerate and then decelerate?

YES: Go to next check.

NO: Check handle switches 5 A fuse (F17).

NO: Check unswitched power 7.5 A fuse (F1).

IF OK: See an authorized John Deere dealer.

Continued on next page

DB84312,000023D -19-26AUG19-30/43

Reversing Fan Check (if equipped)

TX1125087 —UN—02NOV12

Reversing Fan Switch

Press reversing fan switch to the upper position.

LISTEN/LOOK: Does fan reverse direction and operate at full speed for 15 seconds?

YES: Go to next check.

NO: See an authorized John Deere dealer.

DB84312,000023D -19-26AUG19-31/43

Transmission Response Check (EH only, if equipped)

CAUTION: Prevent injury from unexpected machine movement. Keep bystanders clear of machine.

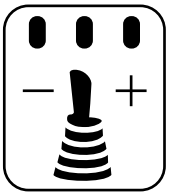

TX1125284 —UN—06NOV12

Transmission Response Switch

Position engine speed control dial in the slow idle position.

NOTE: Engagement and monitor unit (EMU) displays the following rates:

- *Precision rate—Machine moves at a slower rate suited for precise work (one LED illuminated).*
- *Utility rate—Machine moves at a rate suited for efficient work (two LEDs illuminated).*
- *Production rate—Machine moves at a fast rate suited for quick work (three LEDs illuminated).*

Press transmission response switch to select precision rate (one LED illuminated).

Drive machine forward.

Press transmission response switch to select utility rate (two LEDs illuminated).

Drive machine forward.

LOOK/FEEL: Does machine respond to joystick faster when in utility rate than when in precision rate?

Press transmission response switch to select production rate (three LEDs illuminated).

Drive machine forward.

LOOK/FEEL: Does machine respond to joystick faster when in production rate than when in utility rate?

YES: Go to next check.

NO: See an authorized John Deere dealer.

Continued on next page

DB84312,000023D -19-26AUG19-32/43

Pattern Select Check (EH only, if equipped)

CAUTION: Prevent injury from unexpected machine movement. Keep bystanders clear of machine.

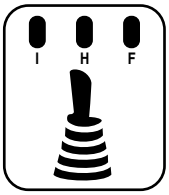

TX1204766 —UN—30OCT15

Pattern Select Switch

Position engine speed control dial in the slow idle position.

Press pattern select switch on sealed switch module (SSM) to change control pattern. EMU displays selected control pattern.

NOTE: The LEDs illuminate with corresponding control pattern.

- *I—ISO pattern*
- *H—H pattern*
- *F—Not used*

Operate machine controls.

LOOK/FEEL: Does machine follow selected control pattern?

YES: Go to next check.

NO: See an authorized John Deere dealer.

DB84312,000023D -19-26AUG19-33/43

Hydraulic Response Check (EH only, if equipped)

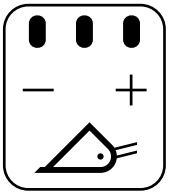

TX1125304 —UN—06NOV12

Hydraulic Response Switch

Position engine speed control dial in the slow idle position.

NOTE: Engagement and monitor unit (EMU) displays the following rates:

- *Precision rate—Bucket moves at a rate suited for precise work (one LED illuminated).*
- *Utility rate—Bucket moves at a rate suited for efficient work (two LEDs illuminated).*
- *Production rate—Bucket moves at a rate suited for quick work (three LEDs illuminated).*

Press hydraulic response switch to select precision rate (one LED illuminated).

Operate boom and bucket functions.

Press hydraulic response switch to select utility rate (two LEDs illuminated).

Operate boom and bucket functions.

LOOK/FEEL: Do boom and bucket move faster when in utility rate than when in precision rate?

Press hydraulic response switch to select production rate (three LEDs illuminated).

Operate boom and bucket functions.

LOOK/FEEL: Do boom and bucket move faster when in production rate than when in utility rate?

YES: Go to next check.

NO: See an authorized John Deere dealer.

Continued on next page

DB84312,000023D -19-26AUG19-34/43

Ride Control Check (if equipped)

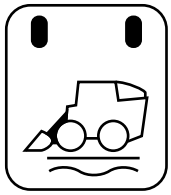

TX1125306 —UN—06NOV12

Ride Control Switch

Position engine speed control dial in the slow idle position.

Load bucket with material.

Press ride control switch on the sealed switch module (SSM) (left light-emitting diode [LED] illuminated) to enable ride control in standby mode.

Activate ride control by pressing right joystick trigger (both LEDs illuminated).

Raise boom to maximum height.

Lower boom down halfway to the ground.

Stop suddenly by releasing controls.

LOOK: Is boom cushioned when the control is released?

YES: Go to next check.

NO: See an authorized John Deere dealer.

Continued on next page

DB84312,000023D -19-26AUG19-35/43

Creep Mode Check (EH only, if equipped)	**CAUTION: Prevent injury from unexpected machine movement. Keep bystanders clear of machine.** 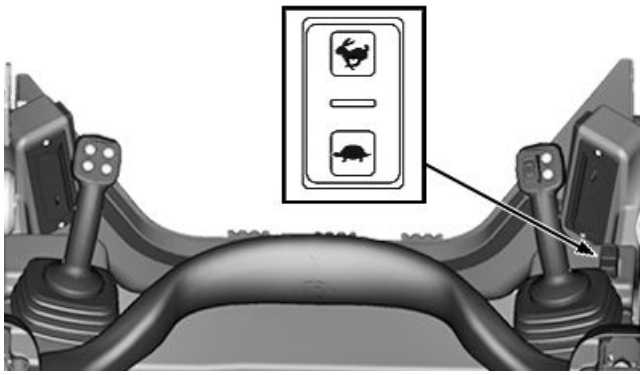 TX1215168A —UN—03MAY16 *Creep Mode Speed Switch* Position engine speed control dial in the slow idle position. Enable creep mode. Creep mode percentage displays on the EMU. Change creep mode speed percentage to 50% by pressing the lower portion of creep mode speed switch. Drive machine forward. *LOOK: Does machine move forward at 50% slower speed?*	**YES:** Go to next step in this check. **NO:** See an authorized John Deere dealer.
	Change creep mode speed percentage to 100% by pressing upper portion of creep mode speed switch. *LOOK/FEEL: Does machine move forward at normal speed?*	**YES:** Go to next check. **NO:** See an authorized John Deere dealer.

DB84312,000023D -19-26AUG19-36/43

Self Leveling Valve Check (if equipped)	*NOTE: Self leveling function only operates during boom up function.* Close cab door (if equipped). Press self leveling switch on sealed switch module (SSM) (left light-emitting diode [LED] illuminated) to turn on self leveling. Activate self leveling by pressing right joystick trigger (both LEDs illuminated). Lower boom to the ground. Position bottom of bucket on the ground. Raise boom. *LOOK: Does bucket self level as boom is raised?*	**YES:** Go to next check. **NO:** See an authorized John Deere dealer.

Continued on next page

DB84312,000023D -19-26AUG19-37/43

Heating and Air Conditioning System Check (if equipped)

TX1200985A —UN—09SEP15

Heater and Air Conditioner Controls

R3—Heater Temperature Control Switch
S9—Blower Motor Speed Switch
S19— Air Conditioner Switch

NOTE: Engine needs to be at operating temperature for this check.

Position engine speed control dial in the slow idle position.

Turn blower motor speed switch (S9) from off to slow, medium, and high speeds.

LISTEN/FEEL: Does fan speed increase and/or decrease as switch is moved?

Turn blower speed switch to medium speed.

Turn heater temperature control switch (R3) to hot (red).

FEEL: Does warm air come out of air ducts?

Turn heater temperature control switch to cold (blue).

FEEL: Does cool air come out of air ducts?

Turn on air conditioner switch (S19).

FEEL/LISTEN: Does cold air come out of air ducts after a couple of minutes?

YES: Go to next check.

NO: Check air conditioner and heater 30 A fuse (F8).

IF OK: See an authorized John Deere dealer.

Continued on next page

DB84312,000023D -19-26AUG19-38/43

Boom Down Drift Check	*NOTE: This check may require two people.* *NOTE: Machine must be equipped with a bucket for this check.* Close cab door (if equipped). Operate hydraulic system until hydraulic oil reaches temperature specification. **Specification** Hydraulic Oil—Temperature.....43°C 110°F Actuate boom function to lower boom to ground. Raise boom halfway. Engage park brake. Mark and record the distance on the boom cylinder rod from the cylinder barrel. Disengage park brake. Allow machine to sit with engine speed at slow idle for 5 minutes. Engage park brake.	**NO:** Go to next check.
	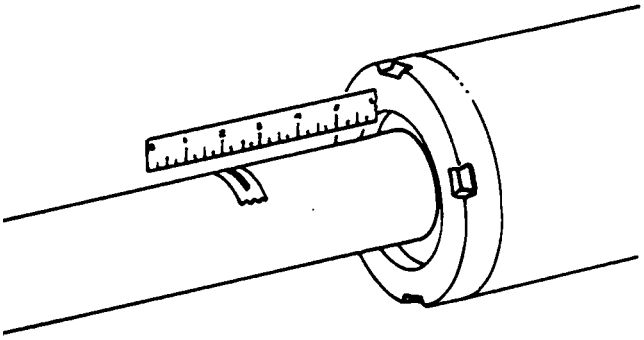 T6222AM —UN—26MAY89 *Function Drift Measurement* Measure marked distance on boom cylinder rod. **Specification** Boom Cylinder—Drift (maximum).....15.5 mm within 5 min 0.6 in within 5 min *LOOK: Does boom drift down more than specification?*	**YES:** See an authorized John Deere dealer.
	Raise boom halfway. Engage park brake. Turn engine off. Allow machine to sit for 5 minutes. **Specification** Boom Cylinder—Drift (maximum).....15.5 mm within 5 min 0.6 in within 5 min *LOOK: Does boom drift down more than specification?*	**YES:** See an authorized John Deere dealer. **NO:** Go to next check.

Continued on next page

DB84312,000023D -19-26AUG19-39/43

Boom Up Drift Check	*NOTE: This check may require two people.* *NOTE: Machine must be equipped with a bucket for this check.* Close cab door (if equipped). Operate hydraulic system until hydraulic oil reaches temperature specification. **Specification** Hydraulic Oil—Temperature.....43°C 110°F *NOTE: Bucket may need to be in dump position.* Actuate boom down function to raise front of machine off the ground. Engage park brake. Mark and record the distance on the boom cylinder rod from the cylinder barrel. Disengage park brake. Allow machine to sit with engine speed at slow idle for 5 minutes. Engage park brake. Measure marked distance on boom cylinder rod. **Specification** Boom Cylinder—Drift (maximum)..... 15.5 mm within 5 min 0.6 in within 5 min *LOOK: Does boom drift up more than specification?*	**NO:** Go to next check. **YES:** Go to next step in this check.
	Actuate boom down function to raise front of machine off the ground. Engage park brake. Turn engine off. Allow machine to sit for 5 minutes. **Specification** Boom Cylinder—Drift (maximum)..... 15.5 mm within 5 min 0.6 in within 5 min *LOOK: Does boom drift up more than specification?*	**YES:** See an authorized John Deere dealer. **NO:** Go to next check.

Continued on next page

DB84312,000023D -19-26AUG19-40/43

Bucket Dump Drift Check	*NOTE: This check may require two people.* *NOTE: Machine must be equipped with a bucket for this check.* Close cab door (if equipped). Operate hydraulic system until hydraulic oil reaches temperature specification. **Specification** Hydraulic Oil—Temperature.....43°C 110°F Raise boom halfway. Fully roll back bucket. Dump bucket halfway. Engage park brake. Mark and record the distance on the bucket cylinder rod from the cylinder barrel. Disengage park brake. Allow machine to sit with engine speed at slow idle for 5 minutes. Engage park brake. Measure marked distance on bucket cylinder rod. **Specification** Boom Cylinder—Drift (maximum).....15.5 mm within 5 min 0.6 in within 5 min *LOOK: Does bucket drift down more than specification?*	**NO:** Go to next check. **YES:** Go to next step in this check.
	Raise boom halfway. Fully roll back bucket. Dump bucket halfway. Engage park brake. Turn engine off. Allow machine to sit for 5 minutes. **Specification** Boom Cylinder—Drift (maximum).....15.5 mm within 5 min 0.6 in within 5 min *LOOK: Does bucket drift down more than specification?*	**YES:** See an authorized John Deere dealer. **NO:** Go to next check.

Continued on next page

DB84312,000023D -19-26AUG19-41/43

Bucket Curl Drift Check	*NOTE: This check may require two people.* *NOTE: Machine must be equipped with a bucket for this check.* Close cab door (if equipped). Operate hydraulic system until hydraulic oil reaches temperature specification. **Specification** Hydraulic Oil—Temperature.....43°C 110°F Dump bucket halfway. Actuate boom down function to raise front of machine off the ground. Engage park brake. Mark and record the distance on the bucket cylinder rod from the cylinder barrel. Disengage park brake. Allow machine to sit with engine speed at slow idle for 5 minutes. Engage park brake. Measure marked distance on bucket cylinder rod. **Specification** Boom Cylinder—Drift (maximum)..... 15.5 mm within 5 min 0.6 in within 5 min *LOOK: Does bucket drift up more than specification?*	**NO:** Go to next check. **YES:** Go to next step in this check.
	Dump bucket halfway. Actuate boom down function to raise front of machine off the ground. Engage park brake. Turn engine off. Allow machine to sit for 5 minutes. **Specification** Boom Cylinder—Drift (maximum)..... 15.5 mm within 5 min 0.6 in within 5 min *LOOK: Does bucket drift up more than specification?*	**YES:** See an authorized John Deere dealer. **NO:** Go to next check.

Continued on next page

DB84312,000023D -19-26AUG19-42/43

Cycle Times Check	Operate machine without bucket or attachment for this check. Operate hydraulic system until hydraulic oil reaches temperature specification. **Specification** Hydraulic Oil—Temperature.....43°C 110°F Position engine speed control dial in fast idle position. Record cycle time for each function. *LOOK: Does machine perform within specification?* **320G Cycle Times—Specification** Boom Raise—Cycle Time (maximum)..... 3.5 s Boom Lower—Cycle Time (maximum)..... 3.2 s Bucket Curl—Cycle Time (maximum)..... 1.4 s Bucket Dump—Cycle Time (maximum)..... 2.3 s **324G Cycle Times—Specification** Boom Raise—Cycle Time (maximum)..... 4.4 s Boom Lower—Cycle Time (maximum)..... 2.8 s Bucket Curl—Cycle Time (maximum)..... 2.2 s Bucket Dump—Cycle Time (maximum)..... 2.2 s **325G Cycle Times—Specification** Boom Raise—Cycle Time (maximum)..... 4.4 s Boom Lower—Cycle Time (maximum)..... 2.8 s Bucket Curl—Cycle Time (maximum)..... 2.2 s Bucket Dump—Cycle Time (maximum)..... 2.2 s	**YES:** Checks complete. **NO:** See an authorized John Deere dealer.

DB84312,000023D -19-26AUG19-43/43

Troubleshooting Procedure

NOTE: Troubleshooting charts are arranged from the simplest to verify, to least likely, more difficult to verify. When diagnosing a problem, use all possible means to isolate the problem to a single component or system. Use the following steps to diagnose problems:

Step 1. Operational Checkout Procedure

Step 2. Troubleshooting Charts

Step 3. Adjustments

Step 4. See a John Deere dealer or other service provider.

TX,TROUBLESHOOT -19-29OCT24-1/1

Engine

Symptom	Problem	Solution
Engine Will Not Start	Park brake switch not engaged (key start only)	Push upper half of switch.
	No power to key switch or park brake switch (key start only)	Check fuse and battery connection.
	No power to starter	Check key switch (if equipped), starter relay, battery connection, and starter connection.
	No fuel	Add correct fuel. Bleed air. See Bleed Fuel System. (Section 4-1.)
	Incorrect fuel	Drain fuel tank. Change primary fuel filter and water separator. See Replace Primary Fuel Filter and Water Separator. (Section 3-8.)
	Fuel shutoff valve is closed	Open fuel shutoff valve.
	Fuel filters restricted	Replace fuel filter. Bleed air. See Replace Final Fuel Filter and Replace Primary Fuel Filter and Water Separator. (Section 3-8.)
	Air leak on suction side of fuel system	Check for bubbles in fuel filter and tighten connections. Inspect fuel lines for damage.
	Slow cranking speed	Check battery and connections.
	Starter	Repair or replace starter.
Engine Surges, Stalls, or Misses	Fuel tank breather restricted	Remove cap and listen for sound of air entering tank. Replace fuel tank breather. See Replace Fuel Tank Breather. (Section 3-9.)
	Restricted air filter	Replace air filter. See Replace Primary and Secondary Engine Air Filter Elements. (Section 3-3.)
	Fuel filters restricted	Replace fuel filter. See Replace Final Fuel Filter and Replace Primary Fuel Filter and Water Separator. (Section 3-8.)
	Air in fuel system	Bleed air from fuel system. See Bleed Fuel System. (Section 4-1.)

Continued on next page

DB84312,0000243 -19-09FEB18-1/2

Symptom	Problem	Solution
	Incorrect fuel	Drain fuel tank. Change primary fuel filter and water separator. See Replace Primary Fuel Filter and Water Separator. (Section 3-8.)
	Contaminated fuel	Drain fuel tank. Change primary fuel filter and water separator. See Replace Primary Fuel Filter and Water Separator. (Section 3-8.)
Engine Overheats	Engine oil level low	Check engine oil level. See Check Engine Oil Level. (Section 3-4.)
	Coolant level low	Check coolant level. See Check Coolant Level. (Section 3-4.)
	Surge tank cap loose	Tighten surge tank cap.
	Debris buildup on cooling package	Clean debris from cooling package. See Check and Clean Cooling Package. (Section 3-3.)
	Restricted air filter	Replace air filter. See Replace Primary and Secondary Engine Air Filter Elements. (Section 3-3.)
	Engine overloaded	Reduce load on engine.
	Loose or damaged accessory drive belt	Check accessory drive belt. See Check and Adjust Accessory Drive Belt Tension. (Section 3-3.)
	Incorrect coolant mixture	Replace coolant. See Drain, Flush, and Refill Cooling System. (Section 3-11.)

DB84312,0000243 -19-09FEB18-2/2

Electrical System

Symptom	Problem	Solution
Park Brake Will Not Disengage	Interlocking seat bar switch is not activated	Lower interlocking seat bar to activate seat switch.
		Raise/lower interlocking seat bar to reactivate seat switch.
	Park brake has not gone through the momentary down (UNLOCKED) position (key start only)	Push lower half of switch.
Park Brake Will Not Engage	Park brake is not in the up (LOCKED) position (key start only)	Push upper half of switch.
Starting Motor Will Not Turn	Blown fuse	Replace fuse. See Replacing Fuses. (Section 4-1.)
	Battery dead or low charge	Check battery voltage and charge as necessary.
	Loose or corroded battery cables	Clean and tighten cables as necessary.
	Loose connection at starter or starter relay	Check electrical connections.
	Starter	Repair or replace starter.
Engine Cranks Slowly	Low battery input	Check battery voltage and charge as necessary.
	Loose or corroded battery cables	Clean and tighten cables as necessary.
	Engine oil viscosity too heavy	Drain engine oil and refill with correct oil. See Drain and Refill Engine Oil and Replace Filter. (Section 3-8.)
	Starter	Repair or replace starter.
Battery Will Not Charge	Low engine speed or excessive idling	Increase engine speed.
	Battery malfunction	Replace battery. See Replacing Battery. (Section 4-1.)
	Battery cables and terminals corroded	Clean cables and connections as necessary.
	Loose or damaged accessory drive belt	Check accessory drive belt. See Check and Adjust Accessory Drive Belt Tension. (Section 3-3.)

Continued on next page

DB84312,0000244 -19-09FEB18-1/2

Symptom	Problem	Solution
	Alternator	Repair or replace alternator.
Lights Do Not Work	Blown fuse	Replace fuse. See Replacing Fuses. (Section 4-1.)
	Bulb malfunction	Check bulb connection or replace as necessary.
Battery Voltage Indicator Remains On With Engine Running	Low battery input	Check battery voltage and charge as necessary.
	Loose or damaged accessory drive belt	Check accessory drive belt. See Check and Adjust Accessory Drive Belt Tension. (Section 3-3.)
	Alternator	Repair or replace alternator.

DB84312,0000244 -19-09FEB18-2/2

Hydraulic System

Symptom	Problem	Solution
Boom and Bucket Will Not Move	Joysticks not in neutral (EH machines)	Move joysticks to neutral position.
	Interlocking seat bar switch is not activated	Lower interlocking seat bar to activate seat switch.
	Park brake engaged	Disengage park brake.
Excessive Pump Noise	Low oil level	Check hydraulic oil level. See Check Hydraulic Oil Level. (Section 3-4.)
	Suction line restricted	Check for line restriction or replace hose as necessary.
	Air leaks at pump inlet line fittings	Check all hydraulic connections and tighten as necessary.
Slow Hydraulic Function	Auxiliary hydraulic roller (EH machines) locked in detent position	Return roller to neutral position.
	Low engine speed	Increase engine speed.
	Cold oil	Warm oil up to operating temperature by operating hydraulic functions.
	Boom or bucket overloaded	Lighten load on hydraulic function.
	Low hydraulic oil level	Check hydraulic oil level. See Check Hydraulic Oil Level. (Section 3-4.)
	Cylinder, hose, or line leakage	Inspect and tighten fittings.
	Air leaks at pump inlet line fittings	Check all hydraulic connections and tighten as necessary.
	Restricted hydraulic filter	Replace hydraulic oil filter. See Drain and Refill Hydraulic Oil and Replace Filter. (Section 3-9.)
	Hydraulic oil aerated	Drain hydraulic oil and refill with correct oil. See Drain and Refill Hydraulic Oil and Replace Filter. (Section 3-9.)
	Stuck pivot pins	See an authorized John Deere dealer.
	Bent or damaged cylinder rods	See an authorized John Deere dealer.

Continued on next page

DB84312,0000245 -19-21MAR22-1/2

Symptom	Problem	Solution
Machine Loses Power	Low hydraulic oil level	Check hydraulic oil level. See Check Hydraulic Oil Level. (Section 3-4.)
	Restricted fuel filter	Replace fuel filter. See Replace Final Fuel Filter and Replace Primary Fuel Filter and Water Separator. (Section 3-8.)
	Restricted hydraulic filter	Replace hydraulic oil filter. See Drain and Refill Hydraulic Oil and Replace Filter. (Section 3-9.)
	Restricted engine air filter	Replace primary and secondary engine air filter elements. See Replace Primary and Secondary Engine Air Filter Elements. (Section 3-3.)
Hydraulic System Overheats	Low hydraulic oil level	Check hydraulic oil level. See Check Hydraulic Oil Level. (Section 3-4.)
	Restricted oil cooler air flow	Clean cooling package. See Check and Clean Cooling Package. (Section 3-3.)
Machine Will Not Move	Park brake switch engaged (key start only)	Push lower half of switch.
Machine Mistracks	Left and right track sag not adjusted the same	Adjust track tension. See Check Track Tension. (Section 3-6.)
	Steering mistracking out of adjustment	Adjust steering mistracking. See Manual Tracking—If Equipped (EH Only) (EMU). (Section 2-3.)

DB84312,0000245 -19-21MAR22-2/2

Prepare Machine for Storage

IMPORTANT: Avoid machine damage. Do not use biodiesel during machine storage. When using biodiesel blends, switch to petroleum diesel for long-term storage.

1. Before storage, operate engine on at least one complete tank of petroleum diesel fuel to purge the fuel system. Ensure that the fuel tank is full during storage to prevent water buildup due to condensation.

NOTE: For blends up to and including B20, it is recommended that biodiesel be used within 3 months of its manufacture. For blends greater than B20, it is recommended that the biodiesel be used within 45 days. The poor oxidation stability characteristic of biodiesel can result in long-term storage problems. John Deere does not recommend using biodiesel in engines powering standby applications or vehicles operating on a seasonal basis. Consult an authorized John Deere dealer or fuel supplier for additives to improve fuel storage and performance of biodiesel fuels. These additives must be added to the biodiesel close to its time of production for them to be effective.

2. Repair worn or damaged parts. If necessary, install new parts to avoid needless delays later.
3. Replace air cleaner elements.

IMPORTANT: High-pressure washing greater than 1379 kPa (13.8 bar) (200 psi) can damage freshly painted finishes. Paint should be allowed to air-dry for a minimum of 30 days after receipt of machine before cleaning parts or machines with high pressure. Use low-pressure wash operations until 30 days have elapsed.

4. Wash the machine. Use low-pressure wash operations (less than 1379 kPa [13.8 bar] [200 psi]) until 30 days after receipt of machine have elapsed. Paint areas to prevent rust. Replace decals where needed.

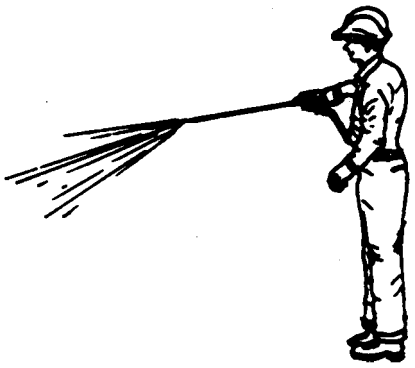

T5813AM —UN—09FEB89

Prepare Machine for Storage

5. Store machine in a dry, protected place. If stored outside, cover with a waterproof material.

IMPORTANT: LPS 3® Rust Inhibitor can destroy painted finish. DO NOT spray LPS 3 Rust Inhibitor on painted areas.

6. Retract all hydraulic cylinders if possible. If not, coat exposed cylinder rods with LPS 3® Rust Inhibitor.
7. Place a DO NOT OPERATE tag on the right control lever.
8. Lubricate all grease points.
9. Remove the battery and store in a dry, protected place after charging fully. If not removed, disconnect the negative battery cable from the (—) terminal.
10. Drain water separator fuel filter.
11. Remove keys and lock engine cover and door if equipped.

LPS 3 Rust Inhibitor is a trademark of Illinois Tool Works.

CN93077,000065B -19-06APR17-1/1

Monthly Storage Procedure

NOTE: The following procedure is used monthly when the machine has not been prepared for long-term storage.

CAUTION: Prevent possible injury or death from asphyxiation. Engine exhaust fumes can cause sickness or death. ONLY start engine in a well-ventilated area.

1. Clear area around machine to allow for movement
2. Charge and install batteries.
3. Remove LPS 3 Rust Inhibitor from cylinder rods with a cleaning solvent.
4. For machines with tires, check condition of tires and tire pressure. For machines with tracks, check condition of tracks and track sag. For non-sealed and lubricated track chains, apply oil to the pin-to-bushing joints.
5. Inspect engine compartment and remove any foreign material.
6. Check belts.

IMPORTANT: Prevent possible engine damage. During cold temperatures, check fluidity of engine oil on dipstick. If the oil appears waxy and/or jelly like rather than liquid, DO NOT attempt to start engine. Use external heat source to warm the crankcase until oil appears fluid.

7. Check all fluid levels. If low, check for leaks and add oil as required.
8. Check condition of all hoses and connections.

CAUTION: Prevent possible injury from unexpected machine movement. Clear the area of all persons before operating the machine.

NOTE: If the batteries are kept disconnected for more than 1 month, resetting of the monitor may be required. Contact a John Deere dealer or other service provider.

Start engine and run until machine reaches normal operating temperature.
- If engine does not start or runs poorly after starting, change fuel filters. Bleed fuel system.

9. Operate all controls, levers, seat adjustments, etc.
   - If equipped, operate air conditioning system for 2 minutes.
10. Run machine back and forth several times.
11. Park the machine with cylinder rods retracted, if possible. Shut off engine.
12. Place a DO NOT OPERATE tag in operator's station
13. Check condition of all hoses and connections.
14. Drain water and sediment from fuel tank.

IMPORTANT: LPS 3 Rust Inhibitor can destroy painted finish. DO NOT spray LPS 3 Rust Inhibitor on painted areas.

15. Apply LPS 3 Rust Inhibitor to exposed cylinder rod areas.
16. Lock all covers and doors if equipped

th25s78,1737457037981 -19-21JAN25-1/1

Record Product Identification Number (PIN)

Product Identification Number (PIN)_____

NOTE: Record all 17 characters of the PIN.

The PIN tag (1) is located on the right side of machine, above the boom lock.

1— PIN Tag

TX1140197 —UN—29JUL13

Product Identification Number

JK47244,000031D -19-10JUL13-1/1

Record Engine Serial Number

Engine Serial Number _____

The engine serial number tag (1) is located on top of engine rocker arm cover.

1— Engine Serial Number Tag

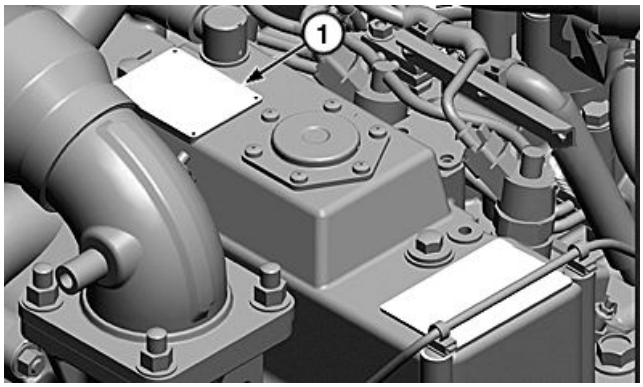

TX1133475 —UN—20MAR13

Engine Serial Number

JK47244,0000192 -19-20MAR13-1/1

Keep Proof of Ownership

1. Maintain in a secure location an up-to-date inventory of all product and component serial numbers.
2. Regularly verify that identification plates have not been removed. Report any evidence of tampering to law enforcement agencies and order duplicate plates.
3. Other steps that can be taken:
   - Mark machine with unique numbering system.
   - Take color photographs from several angles of each machine.

OUT4001,000063E -19-17JAN19-1/1

Keep Machines Secure

1. Install vandal-proof devices.
2. When machine is in storage:
   - Lower equipment to the ground
   - Remove batteries
3. When parking indoors, put large equipment in front of exits and lock storage buildings.
4. When parking outdoors, store in a well-lighted and fenced area.
5. Make note of suspicious activity and report any thefts immediately to law enforcement agencies.
6. Notify a John Deere dealer or other service provider of any losses.

OUT4001,000063D -19-29OCT24-1/1

325G Machine Dimensions

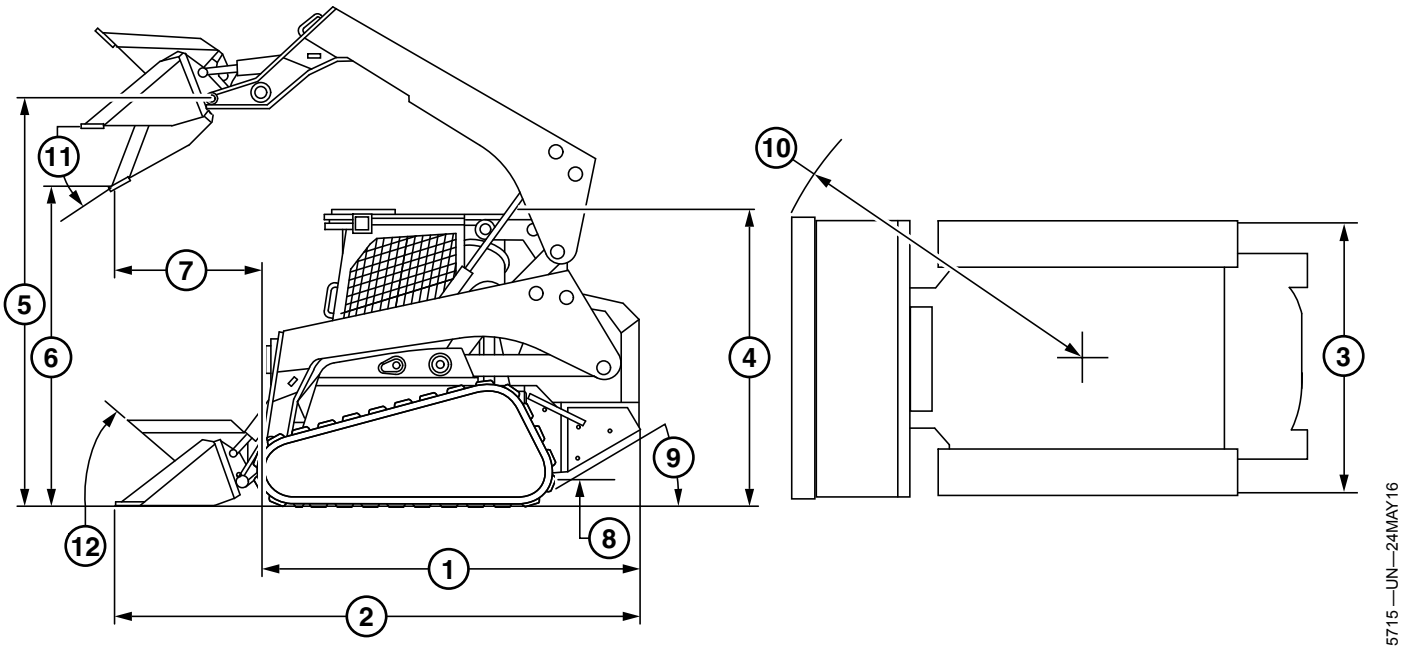

TX1215715

Machine Dimensions

1— Overall Length (without bucket)
2— Overall Length
3— Overall Width
4— Roll-Over Protective Structure (ROPS) Height
5— Hinge Pin Height
6— Dump Height
7— Dump Reach
8— Ground Clearance
9— Departure Angle
10— Front Turn Radius Distance
11— Dump Angle (full lift height)
12— Bucket Rollback Angle (ground level)

NOTE: Specifications and design are subject to change without notice. Wherever applicable, specifications are in accordance with ISO and SAE standards. Except where otherwise noted, these specifications are based on a machine equipped with standard tracks and bucket.

Item	Measurement	Specification
1—Overall	Length (without bucket)	2.85 m 9 ft 4 in
2—Overall		
With Foundry Bucket	Length	3.46 m 11 ft 4 in
With Construction Bucket	Length	3.71 m 12 ft 2 in
3—Overall		
With a 0.32 m (12.6 in) Track (without bucket)	Width	1.82 m 6 ft 0 in
With 0.40 m (15.8 in) Track (without bucket)	Width	1.90 m 6 ft 3 in
4—Roll-Over Protective Structure (ROPS)	Height	2.06 m 6 ft 9 in
5—Hinge Pin	Height	3.20 m 10 ft 6 in

Continued on next page

JS90457,00001FA -19-24JAN18-1/2

Item	Measurement	Specification
6—Dump		
With Foundry Bucket	Height	2.59 m 8 ft 6 in
With Construction Bucket	Height	2.43 m 8 ft 0 in
7—Dump		
With Foundry Bucket	Reach	0.75 m 2 ft 6 in
With Construction Bucket	Reach	0.94 m 3 ft 1 in
8—Ground	Clearance	0.24 m 0 ft 9.3 in
9—Departure	Angle	30.5°
10—Front Turn Radius	Distance (with foundry bucket)	2.03 m 6 ft 8 in
11—Dump	Angle (full lift height)	41°
12—Bucket Rollback	Angle (ground level)	34°
Base Machine With 0.32 m (12.6 in) Track	Operating Weight (approximate)	4313 kg 9508 lb
Base Machine With 0.40 m (15.8 in) Track	Operating Weight (approximate)	4381 kg 9658 lb

JS90457,00001FA -19-24JAN18-2/2

325G Machine Specifications

Item	Measurement	Specification
Engine—Yanmar 4TNV98CT		
Type		Turbocharged
Non-Road Emission Standards		Certified EPA Final Tier 4 Emissions
Bore and Stroke		98 x 110 mm 3.86 x 4.33 in
Rated Gross Horse Power at 2500 rpm	Power	54.8 kW 74 hp
Peak Torque at 1800 rpm	Torque	280 N·m 207 lb·ft
Cylinders	Quantity	4
Displacement	Volume	3.3 L 203 in^3
Electrical System		
System	Voltage	12 V
Alternator Rating	Amperage	75 A (without air conditioner) 90 A (with air conditioner)
Battery	Capacity	925 CCA
Reserve	Capacity	150 min Optional 180 min
Hydraulic System		
System Pressure at Couplers	Pressure	23 787 kPa 238 bar 3450 psi
Standard Pump (S.N. —387019)	Flow Rate	72.3 L/min 19.1 gal/min
Standard Pump (S.N. 387020—)	Flow Rate	78.4 L/min 20.7 gal/min
Optional High Flow Pump (S.N. —385575)	Flow Rate	101.0 L/min 26.7 gal/min
Optional High Flow Pump (S.N. 385576—)	Flow Rate	119.6 L/min 31.6 gal/min
Power Train		
Single Speed	Speed	9.3 km/h 5.8 mph
Two-Speed, Low	Speed	8.4 km/h 5.2 mph
Two-Speed, High	Speed	13.2 km/h 8.2 mph
Cooling		
Fan Type		Hydraulic Variable Speed
Maximum Fan	Speed	2450 rpm

JS90457,00001FB -19-25OCT21-1/1

325G Drain and Refill Capacities

Item	Measurement	Specification
Fuel Tank	Capacity	79.0 L 21.0 gal
Cooling System	Capacity	12.5 L 3.3 gal
Engine Oil (including filter)	Capacity	12.5 L 3.3 gal
Hydraulic Tank	Capacity	26.5 L 7.0 gal
Hydrostatic Planetary Gear Case (per side)	Capacity	0.8 L 27.0 fl oz

JS90457,000021F -19-30JAN18-1/1

Rated Operating Capacity

SAE Rated Operating Capacity (foundry bucket, without counterweights)		
Model	**Weight 35% Tipping Load**	**Weight 50% Tipping Load**
325G	1176 kg (2593 lb)	1680 kg (3704 lb)

JS90457,0000200 -19-15FEB22-1/1

Pallet Fork Lift Chart

Pallet Fork Lift Chart	
Pallet Fork	**325G**
1070 mm (42 in)	710 kg (1564 lb)
1220 mm (48 in)	668 kg (1472 lb)
1220 mm (48 in) Heavy-Duty	656 kg (1445 lb)
Rating based on SAE J1197. Load at 50% tipping capacity, 50% of fork length, and fork height at maximum reach. *Measurements given include a total of six counterweights weighing 234 kg (516 lb).	

JS90457,0000220 -19-01FEB18-1/1

Eurasian Economic Union

This information applies only to products which bear the EAC conformity mark of the Eurasian Economic Union member states.

Manufacturer:
Deere & Company, Moline, Illinois U.S.A.

Name of the authorized representative in the Eurasian Economic Union:
Limited Liability Company
“John Deere Rus”

Address of the authorized representative:
142050, Russia, Moscow region, Domodedovo district, Domodedovo, Beliye Stolbi micro district, vladenye “Warehouse 104”, Building 2

For technical support, contact a John Deere dealer or other service provider.

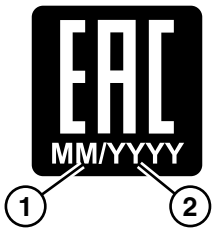

EAC Marking

1— Month of Manufacture **2— Year of Manufacture**

Date of manufacture is denoted by the product marking on or near the serial number plate.

TX1333032 —UN—10NOV22

MB60223,0005008 -19-29OCT24-1/1

Machine Design Life

This machine is designed and manufactured to provide a long life of productive operation, however actual attainable life depends on a number of factors including the severity of working conditions and completion of recommended maintenance. (See the Service section of this manual.)

Periodically inspect and review the machine in conjunction with your John Deere dealer. The review may result in recommendations for service, component repair, remanufacture or replacement, or, if at the end of life, that the machine be removed from operation. (See separate decommissioning section of this manual for information on disposal and recycling of machine components.)

No machine should be operated if safety-related components are missing or in need of service. All missing or damaged safety-related components, including safety signs, should be repaired or replaced before operating.

DX,MACH,DESIGN,LIFE -19-14SEP15-1/1

Index

Page

A

Accessory drive belt
  Check ... 3-3-5
  Replacement ... 4-1-14
Adjustment
  Track tension ... 3-6-2
Air cleaner
  Dust unloader valve
    Clean ... 3-6-1
Air conditioner condenser
  Inspect and clean ... 3-3-1
Air conditioner controls ... 2-1-18
Alternative exit
  Rear window ... 2-1-14
Alternative Exit
  Secondary ... 2-1-14
Alternator
  Precautions ... 4-1-4
Attachment mounting system
  Manual Quik-Tatch ... 2-2-22
  Power Quik-Tatch ... 2-2-23
Attachments
  Adding safely ... 1-3-7
  Installing ... 2-2-22
  Operating safely ... 1-3-7
  Removing ... 2-2-22
Auto-idle
  Operation ... 2-2-24
  Operational check ... 4-2-8
Auto-shutdown ... 2-3-9
Auxiliary hydraulic override (if equipped) (EH only) (EMU)
  Main menu-auxiliary hydraulic override ... 2-3-3
Auxiliary hydraulics
  Connecting ... 2-2-25
  Disconnecting ... 2-2-25
  EH controls ... 2-2-25, 2-2-26
  Operation ... 2-2-26
  Override ... 2-2-26
Avoid static electricity risk when fueling ... 1-2-6
Avoid unauthorized machine modifications
  Safety ... 1-2-4

B

Back-up alarm
  Operational check ... 4-2-9
Backover Accidents ... 1-3-4
Battery
  Boost starting ... 4-1-8
  Clean and tighten ... 3-3-6
  Handling, checking, and servicing ... 4-1-5
  Operational check ... 4-2-4
  Remove and install ... 4-1-9
  Replacement ... 4-1-9
  Specification ... 4-1-9
  Using charger ... 4-1-6
Battery charger
  Using ... 4-1-6
Beacon (if equipped)
  Operator's station ... 2-1-25
Before starting work ... 2-2-1
Belt
  Check ... 3-3-5
  Replacement ... 4-1-14
Biodiesel fuel ... 3-1-3
Bleed fuel system ... 4-1-3
Bolt and screw torque values
  Metric ... 4-1-24
  Unified inch ... 4-1-23
Boom
  Locking and unlocking ... 2-2-13
Boom and bucket speed settings
  Precision ... 2-2-20
  Production ... 2-2-20
  Utility ... 2-2-20
Boom down drift
  Operational check ... 4-2-15
Boom lock ... 2-2-13
Boom lock lever ... 2-2-13
Boom operation
  EH controls ... 2-2-15
  Hand and foot machines ... 2-2-15
  Hands only machines ... 2-2-15
Boom release
  EH machine ... 2-2-13
  Engine stalled ... 2-2-13
  Location ... 2-2-13
Boom up drift
  Operational check ... 4-2-16
Breather elememt
  Replace ... 3-9-2
Bucket curl drift
  Operational check ... 4-2-18
Bucket dump drift
  Operational check ... 4-2-17
Bucket operation
  EH controls ... 2-2-17
  Hand and foot machines ... 2-2-17
  Hands only machines ... 2-2-17
Bulbs
  Remove and install ... 4-1-11

C

Cab door ... 2-1-10
  Safety precautions ... 2-1-10
Cab door and window seals
  Operational check ... 4-2-1
Cab door switch
  Indicator ... 2-1-8
Cab fresh air filter
  Replace ... 3-3-2

Continued on next page

Page

Capacities
Drain and refill ... 4-6-4
Carbon Dioxide Emissions ... -12
CE Mark
Location ... 1-2-1
Charge air cooler
Inspect and clean ... 3-3-1
Cold weather starting ... 2-2-5
Compact track loader
Entering ... 2-2-2
Exiting ... 2-2-2
Conformity marking ... -8
Conformity symbol ... -8
Control panel
Air conditioner switch ... 2-1-2
Auxiliary fourth function switch ... 2-1-2
Auxiliary hydraulic override switch ... 2-1-2
Blower speed dial ... 2-1-2
Cab temperature control dial ... 2-1-2
Dual flasher switch ... 2-1-2
Engine speed control dial ... 2-1-2
Key switch ... 2-1-2
Park brake switch ... 2-1-2
Pattern select switch ... 2-1-2
Quik-Tatch™ switch ... 2-1-2
Self leveling switch ... 2-1-2
Work lights switch ... 2-1-2
Control pattern
Functions ... 1-2-4
Control valves
Do not service ... 4-1-3
Controls
Boom and bucket ... 2-1-1
EH options ... 2-1-1
Auxiliary flow set switch ... 2-1-1
Auxiliary proportional switch ... 2-1-1
Auxiliary second function A switch ... 2-1-1
Auxiliary second function B switch ... 2-1-1
Auxiliary third function A switch ... 2-1-1
Auxiliary third function B switch ... 2-1-1
Float switch ... 2-1-1
Horn (if equipped) ... 2-1-1
Two-speed switch (if equipped) ... 2-1-1
Coolant
Diesel engine
Engine without wet sleeve cylinder liners ... 3-1-10
Disposing ... 3-1-12
Heater ... 2-2-6
Mixing with concentrate, water quality ... 3-1-11
Sample ... 3-8-5
Test ... 3-9-1
Testing freeze point ... 3-1-12
Warm temperature climates ... 3-1-6, 3-1-11
Cooling system
Drain ... 3-11-1
Fill ... 3-11-1
Service safely ... 1-4-2

Page

Counterweights
Install ... 4-1-13
Courtesy lighting ... 2-3-5
Creep mode
Operation ... 2-2-21
Operational check ... 4-2-13
Cycle times
Operational check ... 4-2-19
Cylinders
Do not service ... 4-1-3

D

Daily inspection ... 2-2-1
Diagnose malfunctions
Troubleshooting procedure ... 4-3-1
Diagnostic trouble code check ... 4-2-1
Diesel engine oil
Interim tier 4, final tier 4, stage IIIB, stage IV, and stage V ... 3-1-7
Service interval for operation at high altitude ... 3-1-8
Diesel engines, cold weather effect ... 3-1-5
Diesel fuel ... 3-1-1
Sample ... 3-8-5
Specifications ... 3-1-2
Diesel fuel specifications ... 3-1-2
Diesel fuel, testing ... 3-1-4
Display and clear trouble codes
Operational check ... 4-2-1
Display unit
Auto cleaning menu (EMU) ... 2-3-4
Parked cleaning (EMU) ... 2-3-4
Dome light ... 2-1-20
Drain and refill
Engine oil ... 3-8-1
Drain water and sediment
Fuel tank ... 3-3-5
Dust unloader valve
Clean ... 3-6-1

E

EAC Marking ... 1-2-1
Effect of cold weather on diesel engines ... 3-1-5
Electric Quik-Tatch
Operational check ... 4-2-8
Electrical
Fuse specifications ... 4-1-17
Troubleshooting ... 4-3-4
Emissions
Required language
EPA ... 3-1-1
Emissions Performance
Tampering ... -11
Engagement and monitor unit
Main menu (EMU) ... 2-3-2

Continued on next page

Page

Engagement and monitor unit (EMU)
Auto-idle (EMU) ... 2-3-6
Codes (EMU) ... 2-3-5
Courtesy lighting (EMU) ... 2-3-5
Fan reverse interval (EMU) ... 2-3-5
Job timer (EMU) ... 2-3-6
Monitor (EMU) ... 2-3-6
Operation ... 2-3-1
Operational check, key switch off ... 4-2-3
Operational check, key switch on ... 4-2-4
Software delivery (EMU) ... 2-3-9
Engagement and monitor unit (if equipped) (EH only) (EMU)
Manual tracking (EMU) ... 2-3-8
Engagment and monitor unit
Exhaust filter (EMU) ... 2-3-3
Engagment and monitor unit (EMU)
Anti-theft (EMU) ... 2-3-7
Engine
Break-in ... 2-2-3
Cold start ... 2-2-5
Identification ... 3-2-1
Oil level check ... 3-4-1
Sample oil ... 3-7-1
Stopping ... 2-2-8
Troubleshooting ... 4-3-2
Valve lash
Check and adjust ... 3-10-1
Engine air filter restriction (FT4 engines only)
Indicator ... 2-1-8
Engine block heater ... 2-2-6
Engine coolant
Disposing of ... 3-1-12
Engine coolant temperature gauge ... 2-1-8
Engine cover
Opening and closing ... 3-2-6
Engine idle
Operational check ... 4-2-7
Engine low oil pressure
Indicator ... 2-1-8
Engine oil
Diesel
Interim tier 4, final tier 4, stage IIIB, stage IV, and stage V ... 3-1-7
Service interval for operation at high altitude ... 3-1-8
Drain and refill ... 3-8-1
Sample ... 3-7-1
Engine oil and filter service intervals
Interim tier 4, final tier 4, stage IIIB, stage IV, and stage V
0.12 L/kW or greater oil pan ... 3-1-8
Operation at high altitude ... 3-1-8
Engine oil filter
Replace ... 3-8-1
Engine serial number ... 4-5-1
Engine side panels
Remove and install ... 3-2-6
Engine specifications ... 4-6-3

Page

Engine speed
Operational check ... 4-2-7
Engine speed control
Dial ... 2-2-7
Pedal ... 2-2-7
Engine speed control dial ... 2-1-1
Engine speed control pedal ... 2-1-1
Engine start
Operational check ... 4-2-7
Engine valve lash
Check and adjust ... 3-10-1
Entering machine ... 2-2-2
Eurasian economic union ... 4-6-5
Eurasian Economic Union Technical Regulations ... 1-2-1
European Union Directives Compliance ... 1-2-1
Exhaust filter ... 1-2-9
Ash removal ... 2-2-11, 3-3-6
Auto cleaning ... 2-2-10, 2-2-11
Auto cleaning (EMU)
Activation ... 2-3-4
Disable ... 2-3-4
Cleaning types ... 2-2-10
Information ... 2-2-10
Natural/passive cleaning ... 2-2-10
Parked cleaning (EMU)
Activation ... 2-3-4
Restriction levels ... 2-2-10
Scheduled maintenance ... 3-3-6
Exhaust filter cleaning (FT4 engines only)
Indicator ... 2-1-8
Exhaust Filter, Safety
Safety, Exhaust Filter ... 1-4-4
Exiting machine ... 2-2-2

F

Fan reverse interval ... 2-3-5
Fill cooling system ... 3-11-1
Filter
Cab fresh air
Replace ... 3-3-2
Fuel, final ... 3-8-4
Hydraulic oil ... 3-8-4
Primary engine air ... 3-3-3
Recirculation air
Replace ... 3-3-2
Secondary engine air ... 3-3-3
Filters, Oil
Oil Filters ... 3-1-9
Fire extinguisher
Location ... 2-1-16
Fire prevention ... 1-2-7
Fluid analysis test kit ... 3-2-8
Footwell
Removal ... 3-2-8
Fuel
Biodiesel ... 3-1-3
Diesel ... 3-1-1

Continued on next page

Page

Filter replacement, final 3-8-4
Handling and storing 3-1-2
Lubricity 3-1-2
Fuel filter
Final 3-8-4
Primary 3-8-3
Fuel Filters
Filters, Fuel 3-1-4
Fuel gauge 2-1-8
Fuel system
Bleed 4-1-3
Fuel tank
Drain water and sediment 3-3-5
Specification 3-2-3
Fuel tank breather
Check 3-3-2
Replace 3-9-1
Fuse specifications 4-1-17
Fuses
Glow plug
Designation 4-1-22
Location 4-1-22

G

Gauges 2-1-8
Gear case oil 3-1-14
Grease
Multipurpose Extreme Pressure (EP) 3-1-14

H

Halogen bulbs
Remove and install 4-1-11
Hardware torque values
Metric 4-1-24
Unified inch 4-1-23
Heater
Coolant 2-2-6
Heater controls 2-1-17
Heating and air conditioning system
Operational check 4-2-14
High altitude
Operation 3-1-6
High flow hydraulics (if equipped) 2-2-29
High flow switch 2-2-29
High-pressure fuel pump
Do not service 4-1-3
Horn button 2-1-25
Horn circuit
Operational check 4-2-2
Hour meter
Check 3-2-3
Hydraulic
Oil change 3-9-3
Oil filter replace 3-8-4
Oil level check 3-4-2

Page

Oil tank breather element replace 3-9-2
System, pressure release 2-2-27
Troubleshooting 4-3-6
Hydraulic control enable
Operational check 4-2-8
Hydraulic oil 3-1-13
Hydraulic oil cooler
Inspect and clean 3-3-1
Hydraulic oil filter restriction
Indicator 2-1-8
Hydraulic oil temperature
Indicator 2-1-8
Hydraulic response
Operational check 4-2-11
Hydraulics
EH controls 2-2-27
Hydraulics off
Indicator 2-1-8
Hydrostatic planetary gear case 3-5-1, 3-9-4

I

Identification
Manual ..... -3
Indicator
Cab door switch 2-1-8
Engine air filter restriction (FT4 engines only) 2-1-8
Engine low oil pressure 2-1-8
Hydraulic oil filter restriction 2-1-8
Hydraulic oil temperature 2-1-8
Hydraulics OFF 2-1-8
Seat belt switch 2-1-8
Seat switch 2-1-8
STOP 2-1-8
Two-speed 2-1-8
Indicator lights 2-1-8
Injection nozzle
Do not service 4-1-3
Interlocking seat bar
Function 2-1-9

J

JDLink 4-1-10
Joystick perfomance package (if equipped) 2-2-19
Joysticks
Buttons 2-1-1

K

Key switch on, engine off checks 4-2-4
Key switch on, engine on checks 4-2-7

L

Left and right pedals
Hand and foot machine only 2-1-1

Continued on next page

Page

Lift chart
Pallet fork 4-6-4
Light-emitting diode (LED) lights
Remove and install 4-1-12
Lights circuit
Operational check 4-2-5
Lubricant
Mixing 3-1-14
Storage 3-1-14
Lubricants, safety 3-1-13
Lubricate
Boom linkage 3-4-4
Cylinder pivot points 3-4-4
Quik-Tatch linkage 3-4-4
Lubricity of diesel fuel 3-1-2

M

Machine
Blocking location 3-2-4
Clean regularly 4-1-1
Lifting area 3-2-4
Raising and blocking 3-2-4
Required stop warning 2-2-8
Service 3-2-2
Trailer loading 2-2-30
Welding 4-1-10
Machine design life 4-6-5
Machine dimensions 4-6-1
Machine movement
Unintended 1-3-2
Machine specifications 4-6-3
Machine,inspect 1-2-4
Main menu
Anti-theft (EMU) 2-3-7
Auto-idle (EMU) 2-3-6
Auxiliary hydraulic override 2-3-3
Codes (EMU) 2-3-5
Courtesy lighting 2-3-5
Exhaust filter (EMU) 2-3-3
Fan reverse interval 2-3-5
Job timer (EMU) 2-3-6
Manual tracking (EMU) 2-3-8
Monitor (EMU) 2-3-6
Software delivery (EMU) 2-3-9
Maintenance
Required parts 3-2-11
Schedule and record 3-2-9
Maintenance legend chart
Intervals 3-2-12
Manual
Identification ..... -3
MENU button 2-1-8
Metric bolt and screw torque values 4-1-24
Mistracking
Check 3-3-6
Mixing lubricants 3-1-14

Page

Monitor
Anti-theft (EMU) 2-3-7
Codes (EMU) 2-3-5
Exhaust filter (EMU) 2-3-3
Motors
Do not service 4-1-3
Multipurpose Extreme Pressure (EP) grease 3-1-14

N

Normal break-in
Rubber track 2-4-4

O

Oil
Chain case sample 3-8-5
Engine
Interim tier 4, final tier 4, stage IIIB, stage IV, and stage V 3-1-7
Hydraulic 3-1-13
Hydraulic change 3-9-3
Hydraulic sample 3-8-5
Hydrostatic planetary 3-5-1, 3-9-4
Hydrostatic planetary gear case 3-1-14
Level check hydraulic 3-4-2
Level check, engine 3-4-1
Oil cooler
Inspect and clean 3-3-1
Operating capacity weights 4-6-4
Operation
Auto-idle 2-2-24
Creep mode (if equipped) 2-2-21
Operation qualification 1-2-3
Operational
Checkout 4-2-1
Operational check
Auto-idle 4-2-8
Back-up alarm 4-2-9
Battery 4-2-4
Boom down drift 4-2-15
Boom up drift 4-2-16
Bucket curl drift 4-2-18
Bucket dump drift 4-2-17
Cab door and window seals 4-2-1
Creep mode 4-2-13
Cycle times 4-2-19
Display and clear trouble codes 4-2-1
Electric Quik-Tatch 4-2-8
Engine idle 4-2-7
Engine speed 4-2-7
Engine start 4-2-7
Heating and air conditioning system 4-2-14
Horn circuit 4-2-2
Hydraulic control enable 4-2-8
Hydraulic response 4-2-11
Lights circuit 4-2-5

Continued on next page

Page

Pattern select 4-2-11
Reversing fan 4-2-10
Ride control 4-2-12
Seat control 4-2-2
Self leveling valve 4-2-13
Steering mistracking 4-2-9
Transmission response 4-2-10
Two speed 4-2-9
Windshield washer circuit 4-2-6
Windshield wiper circuit 4-2-6
Operational check, key switch off
Engagement and monitor unit (EMU) 4-2-3
Operational check, key switch on
Engagement and monitor unit (EMU) 4-2-4
Operator convenience 1-1-1
Operator's station
Beacon light 2-1-25
Raising and lowering 3-2-5
Owner
Controls 2-3-8

P

Pallet fork lift chart 4-6-4
Park brake
Indicator 2-1-8
Parts, moving
Stay clear 1-2-5
Pattern select
Operational check 4-2-11
Pattern select switch 2-1-1
Pedals
Hand and foot machine only 2-1-1
Periodic maintenance decal
Operational check 4-2-1
Pins, metal
Drive safely 1-4-3
Polycarbonate
Window
Check 4-1-2
Inspect 4-1-2
Power outlet 2-1-16
Pre-start inspection 2-2-1
Pressure release
Hydraulic system 2-2-27
Primary engine air filter
Replace 3-3-3
Primary fuel filter and water separator
Check and drain 3-3-4
Product identification number 4-5-1
Product Identification Number
Location 1-2-1
Pumps
Do not service 4-1-3

Page

Q

Quik-Tatch
Manual 2-2-22
Power 2-2-23

R

Race track chart
Intervals 3-2-12
Radiator
Coolant level check 3-4-3
Inspect and clean 3-3-1
Radio
Setting the clock 2-1-21
Tuning radio 2-1-21
Volume adjustment 2-1-21
Rated operating capacity 4-6-4
Rear camera
Location 2-1-25
Monitor 2-1-25
Operation 2-1-25
Rear window 2-1-14
Recirculation air filter
Replace 3-3-2
Recognize
Safety, information 1-2-2
Refueling, avoid static electricity risk 1-2-6
Regulator
Precautions 4-1-4
Replace
Engine oil filter 3-8-1
Replacing
Seat belt 4-1-15
Reversing fan
Operational check 4-2-10
Ride control
Operation 2-2-28
Operational check 4-2-12
Riding machine 1-3-3
Roads
Operating or traveling 1-3-5
ROPS
Inspect 1-3-6
Maintain 1-3-6
Rubber track
Normal break-in 2-4-4
Structure 2-4-1
Types of damages 2-4-5
Crack on tread lug side rubber-fatigue 2-4-5
Cut on tread lug side rubber 2-4-5
Cut steel cord 2-4-8
Cuts on the edges of the track roller side rubber 2-4-6
Deterioration of the track roller side rubber surface 2-4-7
Separation of metal inserts-external forces and corrosion 2-4-7

Continued on next page

Page

Tread lug abrasion 2-4-6
Usage..... 2-4-2

S

Safety
Add cab guarding for special uses.....1-2-3, 1-2-10
Avoid unauthorized machine modifications..... 1-2-4
Caution decals 1-5-1
Clean debris from machine 1-2-10
Electrical lines 1-3-5
Fire..... 1-2-7
Lifting equipment..... 1-4-3
Operator's seat 1-3-1
Park and prepare for service safely 1-4-1
Power lines 1-3-5
Protect against noise 1-2-4
Protective equipment 1-2-3
Service machine 1-4-1
Warning decals 1-5-1
Safety features 1-1-1
Safety hazards
Travel 1-3-6
Safety, high-pressure fluids
Avoid high-pressure fluids..... 1-2-5
Safety, information
Recognize 1-2-2
Safety, lubricants 3-1-13
Sealed switch module (SSM)
Boom height kickout switch..... 2-1-6
Creep mode switch 2-1-6
Engine start switch..... 2-1-6
Engine stop switch 2-1-6
Hydraulic enable switch 2-1-6
Hydraulic response switch 2-1-6
Park brake switch..... 2-1-6
Pattern select switch 2-1-6
Return-to-carry switch..... 2-1-6
Return-to-dig switch 2-1-6
Ride control switch (if equipped)..... 2-1-6
Self leveling switch..... 2-1-6
Transmission response switch 2-1-6
Seat
Air suspension 2-1-18
Air suspension with heat 2-1-18
Mechanical suspension..... 2-1-18
Operator..... 2-1-18
Standard 2-1-18
Seat belt
replacing 4-1-15
Seat belt switch
Indicator 2-1-8
Seat control
Operational check 4-2-2
Seat switch
Indicator 2-1-8
Secondary air filter
Replace..... 3-3-3

Page

Secondary alternative exit 2-1-14
Handle assembly 2-1-15
Open secondary alternative exit 2-1-14
SELECT button..... 2-1-8
Self leveling 2-2-27
Operation 2-2-27
Self leveling switch 2-2-27
Self leveling valve
Operational check 4-2-13
Serial number
Engine..... 4-5-1
Service
Machine 3-2-2
Service ADVISOR connector..... 2-1-16
Service ADVISOR Remote
Overview 2-2-12
Reprogramming 2-2-12
Terms and conditions ..... -14
Side windows
Opening and closing 2-1-13
Removing and installing..... 2-1-13
Slopes
Operation on 1-3-5
Specification
Fuel tank 3-2-3
Hardware torque 4-1-22
Specifications
Fuse 4-1-17
Sound..... 1-2-1
Vibration..... 1-2-1
Sprocket teeth
Wear 2-4-3
Starting
Cold weather..... 2-2-5
Engine..... 2-2-3
Key start
Key switch 2-2-3
Keyless start
Sealed switch module (SSM) 2-2-3
Steering 2-2-14
Hand and foot controls..... 2-2-14
Hands only (H pattern) controls 2-2-14
Hands only (ISO pattern) controls..... 2-2-14
Steering mistracking
Operational check 4-2-9
Steering Mistracking
Check and Adjust..... 3-3-6
Steps
Use correctly
Handholds 1-3-1
STOP
Indicator 2-1-8
Stopping
Engine..... 2-2-8
Storage
Machine 4-4-1
Monthly 4-4-2
Storing fuel 3-1-2

Continued on next page

Page

Storing lubricants 3-1-14
Structure
  Rubber track 2-4-1
Surge tank
  Coolant level check 3-4-3

T

Testing diesel fuel 3-1-4
Tie down locations 2-2-30
Top window 2-1-13
Torque charts
  Metric 4-1-24
  Unified inch 4-1-23
Track
  Damage 2-4-5
    Crack on tread lug side rubber-fatigue 2-4-5
    Cut on tread lug side rubber 2-4-5
    Cut steel cord 2-4-8
    Cuts on the edges of the track roller side rubber 2-4-6
    Deterioration of the track roller side rubber surface 2-4-7
    Separation of metal inserts-external forces and corrosion 2-4-7
    Tread lug abrasion 2-4-6
  Sag 4-1-22
Track tension
  Adjustment 3-6-2
Track wear 2-4-4
Transmission response
  Operational check 4-2-10
Transporting machine 2-2-30
Travel and steer speed settings (if equipped)
  Precision 2-2-19
  Production 2-2-19
  Utility 2-2-19
Traveling
  On public roads 1-3-5
Troubleshooting procedure 4-3-1
Two speed
  Operational check 4-2-9
Two-speed
  Indicator 2-1-8
  Lockout 2-3-8
Two-speed operation (if equipped) 2-2-29

U

Undercarriage
  Components 2-4-1
Unified inch bolt and screw torque values 4-1-23
Usage
  Rubber track 2-4-2

W

Warning
  Required machine stop 2-2-8
Water separator
  Check and drain 3-3-4
  Fuel filter 3-8-3
Wear
  Sprocket teeth 2-4-3
Weights
  Operating capacity 4-6-4
Welding repairs 1-4-3
Window
  Polycarbonate
    Clean 4-1-2
    Inspect 4-1-2
  Rear 2-1-14
  Sides 2-1-13
  Top 2-1-13
Windshield washer 2-1-17
Windshield washer circuit
  Operational check 4-2-6
Windshield wiper 2-1-17
Windshield wiper circuit
  Operational check 4-2-6
Wiper assembly 2-1-10
Work lights
  Remove and install halogen bulbs 4-1-11
  Remove and install Light-emitting diode (LED) lights 4-1-12