5045E, 5055E, 5065E and 5075E FT4 Tractors

(Serial No. 103101 -)

(North America)

OPERATOR'S MANUAL

5045E, 5055E, 5065E and 5075E FT4 Tractors (S.No. 103101 —) (North America)

OMSJ29595 ISSUE I0 (ENGLISH)

CALIFORNIA

Proposition 65 Warning

Diesel engine exhaust and some of its constituents are known to the State of California to cause cancer, birth defects, and other reproductive harm.

If this product contains a gasoline engine:

⚠ WARNING

The engine exhaust from this product contains chemicals known to the State of California to cause cancer, birth defects or other reproductive harm.

The State of California requires the above two warnings.

Additional Proposition 65 Warnings can be found in this manual.

John Deere India Pvt. Ltd

PRINTED IN U.S.A.

jdservicemanual.com

Introduction

Foreword

READ THIS MANUAL carefully to learn how to operate and service your machine correctly. Failure to do so could result in personal injury or equipment damage. This manual and safety signs on your machine may also be available in other languages. (See your John Deere dealer to order.)

THIS MANUAL SHOULD BE CONSIDERED a permanent part of your machine and should remain with the machine.

MEASUREMENTS in this manual are given in both metric and customary U.S. unit equivalents. Use only correct replacement parts and fasteners. Metric and inch fasteners may require a specific metric or inch wrench.

RIGHT-HAND AND LEFT-HAND sides are determined by facing the direction of forward travel.

WRITE TRACTOR SERIAL (CHASSIS) NUMBER in the Specification or Identification Numbers section. Accurately record all the numbers to help in tracing the machine should it be stolen. Your dealer also needs these numbers when you order parts. File the identification numbers in a secure place off the machine.

SETTING FUEL DELIVERY BEYOND PUBLISHED factory specifications or otherwise overpowering will result in loss of warranty protection for this machine.

BEFORE DELIVERING THIS MACHINE, your dealer preforms a predelivery inspection. After operating for the first 100 hours, schedule an after-sale inspection with your dealer to ensure best performance.

THIS TRACTOR IS DESIGNED SOLELY for use in customary agricultural or similar operations ("INTENDED USE"). Use in any other way is considered as contrary to the intended use. The manufacturer accepts no liability for damage or injury resulting from this misuse, and these risks must be borne solely by the user. Compliance with and strict adherence to the conditions of operation, service and repair as specified by the manufacturer also constitute essential elements for the intended use.

THIS TRACTOR SHOULD BE OPERATED, serviced and repaired only by persons familiar with all its particular characteristics and acquainted with the relevant safety rules (accident prevention). The accident prevention regulations, all other generally recognized regulations on safety and occupational medicine and the road traffic regulations must be observed at all times. Any arbitrary modifications carried out on this tractor will relieve the manufacturer of all liability for any resulting damage or injury.

PY39692 —UN—07FEB17

John Deere 5E - CAB Tractor

PY39693 —UN—07FEB17

John Deere 5E - OOS Tractor

NOTE: Tractors shown may have optional equipment.

RM87422,0000633 -19-13FEB17-1/1

Contents

Page

Safety
Recognize Safety Information 05-1
Understand Signal Words.....05-1
Follow Safety Instructions.....05-1
Prepare for Emergencies.....05-2
Wear Protective Clothing.....05-2
Protect Against Noise.....05-2
Handle Fuel Safely—Avoid Fires.....05-3
Handle Starting Fluid Safely.....05-3
Fire Prevention 05-3
In Case of Fire.....05-4
Avoid Static Electricity Risk When Refueling.....05-4
Keep ROPS Installed Properly 05-5
Use Foldable ROPS and Seat Belt Properly 05-5
Stay Clear of Rotating Drivelines.....05-6
Use Steps and Handholds Correctly 05-6
Read Operator's Manuals for ISOBUS Controllers.....05-7
Use Seat Belt Properly 05-7
Operating the Tractor Safely 05-8
Avoid Backover Accidents 05-9
Limited Use in Forestry Operation.....05-9
Operating the Loader Tractor Safely 05-9
Keep Riders Off Machine 05-10
Instructional Seat.....05-10
Use Safety Lights and Devices.....05-10
Use a Safety Chain..... 05-11
Transport Towed Equipment at Safe Speeds ... 05-11
Use Caution on Slopes, Uneven Terrain, and Rough Ground.....05-12
Freeing a Mired Machine.....05-12
Avoid Contact with Agricultural Chemicals 05-13
Handle Agricultural Chemicals Safely 05-14
Handling Batteries Safely 05-15
Avoid Heating Near Pressurized Fluid Lines 05-15
Remove Paint Before Welding or Heating.....05-16
Handle Electronic Components and Brackets Safely 05-16
Practice Safe Maintenance.....05-17
Avoid Hot Exhaust.....05-17
Clean Exhaust Filter Safely 05-18
Work In Ventilated Area.....05-19
Support Machine Properly.....05-19
Prevent Machine Runaway.....05-19
Park Machine Safely.....05-20
Transport Tractor Safely 05-20
Service Cooling System Safely 05-20
Service Accumulator Systems Safely.....05-21
Service Tires Safely.....05-21
Service Front-Wheel Drive Tractor Safely 05-21
Tightening Wheel Retaining Bolts/Nuts 05-22
Avoid High-Pressure Fluids 05-22
Do Not Open High-Pressure Fuel System.....05-22
Store Attachments Safely 05-23
Decommissioning — Proper Recycling and Disposal of Fluids and Components 05-23

Safety Signs
Danger Decal — Starting Engine 10-1
Warning Decal — ROPS 10-1
Warning Decal — Avoid Crushing 10-2
Caution Decal — Safety Instructions.....10-2
Safety Decals — Cab 10-3
Warning Decal — PTO Shield 10-4
Instructional Seat (If Equipped) 10-5

Controls and Instruments
Tractor Controls — OOS (PowrReverser™ Transmission) 15-1
Tractor Controls — OOS (SyncShuttle Transmission).....15-3
Tractor Controls — Cab (SyncShuttle Transmission).....15-5
Tractor Controls — Cab (PowrReverser™ Transmission) 15-7
Instrument Panel 15-9
Information Display (Roll Mode Switch)..... 15-11
Overhead Control Panel — Cab.....15-12

Lights
Light Switch Positions — OOS 20-1
Light Switch Positions — Cab 20-2
Using Headlights — OOS.....20-3
Using Headlights — Cab 20-4
High Beam Indicator.....20-5
Using Work Lights — OOS.....20-6
Using Floodlights Cab.....20-7
Using Tail Lights — OOS.....20-8
Using Tail Lights — Cab 20-8
Using Turn Signals 20-9
Using Warning Lights — OOS.....20-10
Using Warning Lights — Cab 20-11

Continued on next page

Original Instructions. All information, illustrations and specifications in this manual are based on the latest information available at the time of publication. The right is reserved to make changes at any time without notice.

COPYRIGHT © 2020
DEERE & COMPANY
Moline, Illinois
All rights reserved.
A John Deere ILLUSTRUCTION ™ Manual
Previous Editions
Copyright © 2017, 2018, 2019

Page

Using Seven-Terminal Outlet....20-12
Operating Rotating Beacon Light — (If Equipped)....20-13

Operator Station — OOS
Operate Foldable ROPS....25-1
Using Seat Belt....25-2
Select Seat Position....25-2
Adjusting Steering Wheel — (If Equipped)....25-2
Adjusting Ride Comfort....25-3
Using Operator's Manual Holder....25-3
Use Tool Box....25-3

Operator Station—Cab
Using Seat Belt....26-1
Adjusting Seat Mechanical Suspension....26-2
Adjusting Steering Wheel....26-2
Accessory Electrical Outlets....26-3
Use Tool Box....26-3
Opening Windows....26-4
Opening Door....26-4
Emergency Exit....26-5
Inside Rear View Mirror and Sun Visor....26-5
Adjusting Blower Speed....26-5
Controlling Temperature....26-6
Deicing, Demisting or Defrosting Windshield....26-6
Optimizing A/C and Heater Performance....26-7
Operating Windshield Wiper and Washer....26-7
Routing Cables and Harnesses....26-8
Operating Radio (If Equipped)....26-8
Setting Clock (If Equipped)....26-9
Operating Cassette Tape or Compact Disc Player—If Equipped....26-10
Using Dome Light....26-11
Using Courtesy Light....26-11
Using Monitor Mounts....26-11

Break-In Period
Engine Operation—Break-In Check....30-1
Break-In Service....30-2

Prestarting Checks
Daily Service Before Starting Engine (OOS and Cab)....35-1

Operating the Engine
Operate Key Switch....40-1
Before Starting the Engine — (PowrReverser™)....40-2
Before Starting the Engine — (SyncShuttle)....40-3
Start the Engine....40-4
Cold-Weather Start Aid....40-6
Using Engine Coolant Heater (If Equipped)....40-7
Check Engine Indicators and Gauges....40-8
Stop/Operator Alert Indicator....40-9

Page

Changing Engine Speed....40-10
Recommended Engine Speeds and Operating Procedures....40-11
Working with Speed/Hour Meters....40-11
Engines with Turbocharger....40-12
Stopping the Engine — (PowrReverser™)....40-13
Stopping the Engine — (SyncShuttle)....40-15
Use a Booster Battery or Charger....40-16
Exhaust Filter System Overview....40-17
Automatic (AUTO) Exhaust Filter Cleaning....40-19
Disabled Exhaust Filter Cleaning....40-20
Parked Exhaust Filter Cleaning....40-21
Service Exhaust Filter Cleaning....40-23

Driving the Tractor
Operator Training Required....50-1
Avoid Contact with Agricultural Chemicals....50-1
Avoid Pesticides....50-1
Driving on Public Roads....50-2
Using Emergency Exit (Cab)....50-6
Use Caution on Hillsides....50-6
Operating Transmission PowrReverser (PRT) (If Equipped)....50-7
PowrReverser (PRT) (If Equipped)....50-9
Using Infinitely Variable Shuttle (If Equipped)....50-10
Selecting a Gear....50-10
Using Brakes....50-11
Use Differential Lock....50-12
Operating Mechanical Front Wheel Drive (If Equipped)....50-13
Stopping Tractor (PowrReverser)....50-14
Stopping Tractor (SyncShuttle)....50-15
Come-Home Mode....50-16

Rockshaft and 3-Point Hitch
Match Tractor Power to Implement....55-1
3-Point Hitch Components....55-1
Rockshaft Control Levers....55-2
Setting Position Control Lever Stop....55-3
Using Rockshaft Position Control....55-4
Using Draft Control....55-5
Adjusting Rockshaft Rate-of-Drop/ Implement/ Transportation Lock....55-6
Prepare Implement....55-7
Convert Category II Hitch to a Category I (If Equipped)....55-7
Position Center Link....55-8
Attach Implements to 3-Point Hitch....55-8
Adjust Hitch Side Sway....55-11
Adjust Hitch Side Sway Bar (If Equipped)....55-11
Leveling Hitch....55-12
Adjust Lateral Float....55-13
Warm Hydraulic System Oil....55-13

Hydraulics and Selective Control Valves
Open Center Hydraulic System....60-1

Continued on next page

Page

Warming Transmission-Hydraulic System Oil....60-1
Use Correct Hose Tips....60-1
Control Lever and Coupler Identification — OOS....60-2
Control Lever and Coupler Identification — CAB....60-3
Mid-Mount Valve Coupler Identification (If Equipped)....60-4
Rear SCV Dust Plug Identification....60-4
SCV Numbers and Corresponding Colors....60-5
Connect Cylinder Hoses....60-5
Connecting Cylinder Hoses Mid-Mount Valve (If Equipped)....60-6
Connect Single-Acting Cylinder....60-8
Correct Reversed Cylinder Response....60-9
Neutral Lever Position....60-9
Extend/Retract Cylinder....60-10
Use Power Beyond Attachment (If Equipped)....60-11
Adjust Cylinder Stop....60-12
Disconnect Cylinder Hoses....60-12

Drawbar and PTO

Observe Drawbar / Wagon Hitch Load Limitations....65-1
Use Swinging Drawbar....65-1
Adjustable Drawbar....65-2
Proper Use of Drawbar....65-2
Stay Clear of Rotating Drivelines....65-3
Attach PTO-Driven Implement....65-4
Operating Tractor PTO — PowrReverser™....65-5
Operating Tractor PTO — Sync Shuttle....65-7
Select Correct PTO Speeds—If Equipped....65-9
Adjust PTO Clutch Operating Cable....65-10

Performance Ballast

Planning for Maximum Productivity....70-1
Selecting Ballast Carefully....70-1
Ballasting for Front Loader....70-1
Measure Wheel Slip—Manually....70-2
Ballast Limitations....70-3
Ballast Front End for Transport....70-3
Ballast Two-Wheel Drive Tractors....70-3
Ballast MFWD-Equipped Tractors....70-3
Determine Maximum Rear Ballast....70-4
Determine Maximum Front Ballast....70-4
Use Cast Iron Weights....70-4
Install Rear Cast Iron Weights....70-5
Use Liquid Weight....70-6
Use Implement Codes....70-7

Wheels, Tires and Treads

Service Tires Safely....75-1
Check Implement-to-Tire Clearance....75-1
Check Tire Inflation Pressure....75-2
Tire Inflation Pressure Chart....75-2
Select Front Tire Rolling Direction....75-3

Page

Tighten Wheel/Axle Hardware Correctly....75-3
Tighten Bolts—Adjustable Front Axle....75-4
Tighten Wheel Bolts—MFWD Axle....75-5
Tighten Wheel Bolts—Rear Axle....75-5
Observe Rear Wheel Tread Width Limitations....75-5
Tread Settings Two-Position Rear Wheels....75-6
Tread Settings—Multi-Position Rear Wheels....75-7
Tread Settings—Adjustable Front Axle....75-9
Tread Settings—Multi-Position MFWD Wheels....75-10
Adjust Front Axle Tread Width....75-11
Check Toe-In (Two-Wheel Drive Tractor)....75-12
Adjust Toe-In (Two-Wheel Drive Tractor)....75-12
Check Toe-In — MFWD Axle....75-13
Adjust Toe-In—MFWD Axle....75-13
Steering Angle - CARRARO....75-14
Set MFWD Steering Stops Turning Radius....75-14
Use Correct Tire Combinations....75-15
Tire Compatibility Chart....75-15

Transporting

Use Safety Lights and Devices....80-1
Use a Safety Chain....80-1
Driving Tractor on Roads....80-2
Transport on Carrier....80-5
Towing Tractor....80-6

Fuels, Lubricants, and Coolant

Handle Fuel Safely—Avoid Fires....85-1
Handle Fluids Safely—Avoid Fires....85-1
Storing Fuel....85-1
Operating in Warm Temperature Climates....85-1
Handling and Storing Diesel Fuel....85-2
Diesel Fuel....85-3
Minimizing the Effect of Cold Weather on Diesel Engines....85-4
Biodiesel Fuel....85-5
Fill Fuel Tank....85-7
Alternative and Synthetic Lubricants....85-8
Lubricant Storage....85-8
Diesel Exhaust Fluid (DEF) — Use in Selective Catalytic Reduction (SCR) Equipped Engines....85-8
Disposal of Diesel Exhaust Fluid (DEF)....85-9
Refilling Diesel Exhaust Fluid (DEF) Tank....85-9
Storing Diesel Exhaust Fluid (DEF)....85-10
Testing Diesel Exhaust Fluid (DEF)....85-10
Diesel Engine Oil — Interim Tier 4, Final Tier 4, Stage IIIB, Stage IV, and Stage V....85-11
Engine Oil and Filter Service Intervals — Interim Tier 4, Final Tier 4, Stage IIIB, Stage IV, and Stage V Engines....85-12
John Deere Break-In Plus™ Engine Oil — Interim Tier 4, Final Tier 4, Stage IIIB, Stage IV, and Stage V....85-13

Continued on next page

Page

Oil Filters 85-13
Diesel Engine Coolant (engine with wet sleeve cylinder liners) 85-14
John Deere COOL-GARD™ II Coolant Extender 85-15
Water Quality for Mixing with Coolant Concentrate 85-15
Testing Coolant Freeze Point 85-16
Transmission and Hydraulic Oil 85-17
Use Correct Transmission-Hydraulic Filter Element 85-17
Transmission, Steering, Brake, Hydraulic, and Gear Case Oil 85-18
Multipurpose Extreme Pressure (EP) Grease ..85-18
Mixing of Lubricants 85-19
Alternative and Synthetic Lubricants 85-19
Lubricant Storage 85-19
Oilscan™ and CoolScan™ 85-20

Maintenance and Service Intervals

Additional Service Information 90-1
Service Tractor Safely 90-1
Service Interval Chart
Daily or 10 Hours / Weekly or 50 Hours / FIRST 100 Hours / 250 Hours 90-2
500 Hours / 1000 Hours / Annually / 2000 Hours or Two Years / 5000 Hours or Five Years 90-3
Service—As Required 90-3
Observe Service Intervals 90-4
Using High-Pressure Washers 90-4
Using Compressed Air 90-4
Check and Adjust Clutch Pedal Free Play 90-5

General Maintenance and Inspection

Opening Hood 95-1
Engine Air Intake Filters
Inspect 95-1
Replace 95-3
Inspect Engine Air Intake System 95-4
Clean Engine Crankcase Vent Tube 95-4
Check Engine Idle Speeds 95-5
Cleaning the Exhaust Filter Aftertreatment 95-5
Diesel Particulate Filter Maintenance and Service 95-5
Exhaust Filter / Diesel Particulate Filter Ash Handling and Disposal 95-6
Exhaust Filter Disposal 95-6
Tighten Hose Clamps 95-6
Inspect Tractor for Loose Hardware 95-6
Check Neutral Start System PowrReverser Transmission (If Equipped) 95-7
Inspect Seat Belt 95-8
Adjust Hand Throttle Friction 95-8
Inspect Tires 95-9
Tubeless Tire Repair 95-9
Clean Cab Air Filters 95-10
Service Air Conditioner (Cab) 95-12

Page

Cleaning Engine Compartment 95-12
Keep ROPS Installed Properly (OOS) 95-13
Keep Cab Protection System Installed Properly 95-14

Lubrication

Use Correct Lubricant 100-1
Check Engine Oil Level 100-1
Change Engine Oil and Filter 100-2
Check Transmission-Hydraulic Oil Level 100-3
Change Transmission-Hydraulic Oil and Filter 100-4
Clean Transmission-Hydraulic Pickup Screen ..100-5
Lubricate Steering Linkage 100-6
Lubricate Front Axle Pivot Pins 100-6
Lubricate Front Axle Greasing Points 100-7
Lubricate Hitch Components 100-7
MFWD Axle Wheel Hub
Check Oil Level 100-8
Change Oil 100-8
MFWD Axle Housing
Check Oil Level 100-9
Change Oil 100-9
Pack Front Wheel Bearing, 2WD (If Equipped) 100-10
Lubricate Rear Axle Bearings 100-10
Lubricate Operator's Seat Slide Rails (OOS) ..100-10
Lubricate Hood Latch 100-11

Maintenance—Cooling System

Clean Grille, Screen Assembly, Intercooler, Fuel Cooler, Oil Cooler and Radiator — OOS 105-1
Clean Grille, Fuel Cooler, Vapor Condenser, Oil Cooler, Intercooler and Radiator — Cab 105-2
Check Coolant Level 105-4
Check Cooling System for Leaks 105-4
Flush Cooling System and Replace Thermostat 105-5
Flush Cooling System 105-6
Winterize Cooling System 105-7

Maintenance—Fuel System

Do Not Modify Fuel System 110-1
Drain Water and Sediment from Fuel Filters 110-1
Drain Water and Sediment from Fuel Tank (OOS) 110-2
Drain Water and Sediment from Fuel Tank (CAB) 110-2
Replace Fuel Filter / Water Separator 110-3
Bleed Fuel System 110-4

Maintenance—Electrical System

Electrical Service Precautions 115-1
Inspect Alternator/Fan Belt Tensioner 115-2

Continued on next page

Page

Replace Alternator/Fan Belt 115-2
Charge Battery 115-3
Clean Battery..... 115-3
Check Battery Condition..... 115-4
Remove Battery (IOOS and Cab)..... 115-5
Battery Replacement Specifications — OOS ... 115-6
Battery Replacement Specifications — Cab..... 115-6
Service Battery 115-7
Access Fuses and Relays 115-8
Load Center - 1 Fuses — OOS
(PowrReverser™ Transmission) 115-8
Load Center - 2 Relays — OOS
(PowrReverser™ Transmission) 115-9
Load Center - Fuses and Relays—
OOS (SyncShuttle Transmission) 115-9
Load Center Fuses and Relays—Cab
(PowrReverser™ Transmission) 115-10
Load Center Fuses and Relays—Cab
(Sync Shuttle Transmission) 115-11
Fusible Link Location..... 115-11
Starter Wiring Connections..... 115-12
Alternator Wiring Connections..... 115-12
Handling Halogen Light Bulbs Safely 115-13
Replace Headlight Element..... 115-13
Adjust Headlights..... 115-14
Replace Roof Hazard Light Bulb—Cab 115-17
Replace Tail Light and/or Warning Light
Bulb—Open Operator's Station..... 115-18
Replace Tail and Turn Light Bulbs—Cab..... 115-18
Replace Work Light Bulb—Open
Operator's Station 115-19
Replace Worklight Element—Cab 115-19
Replace Dome Light Bulb—Cab..... 115-20
Replacing Controls Illumination Light
Bulb (Cab)..... 115-20
Replacing Rotary Beacon Light Bulb (If
Equipped)..... 115-21

Troubleshooting
Engine Troubleshooting..... 120-1
Transmission Troubleshooting..... 120-5
Hydraulic System Troubleshooting..... 120-6
Deluxe SCV (If Equipped) 120-7
Brakes Troubleshooting..... 120-7
Rockshaft and Quick-Coupler 3-Point
Hitch Troubleshooting 120-8
Remote Hydraulic Cylinders Troubleshooting .. 120-9
Electrical System Troubleshooting 120-10
Heater and A/C System (Cab)..... 120-11
Wiper(s), Floodlights, Dome Light and Radio
(Cab)..... 120-14

Storage
Place Tractor in Long-Term Storage..... 125-1
Remove Tractor from Storage 125-3
Paint Finish Care 125-3

Page

Specifications
General Specifications..... 130-1
Drain and Refill Capacities 130-3
Machine Dimension 130-3
Permissible Load Specifications..... 130-4
Ground Speed Estimates —
PowrReverser™ Transmission..... 130-5
Ground Speed Estimates — Sync
Shuttle Transmission..... 130-6
Correction Factors For Other Tire Sizes..... 130-6
Metric Bolt and Screw Torque Values..... 130-7
Unified Inch Bolt and Screw Torque Values..... 130-8
Emissions Control System Certification Label .. 130-9
CARB Non-road Emissions Control
Warranty Statement—Compression
Ignition..... 130-10
EPA Non-road Emissions Control
Warranty Statement—Compression
Ignition..... 130-18
Limited Battery Warranty 130-20

Identification Numbers
Identification Plates 135-1
Product Identification Number 135-1
Record Front Axle (2-WD) Serial Number..... 135-1
Record Mechanical Front Wheel Drive
(MFWD) Serial Number..... 135-1
ROPS Serial Number 135-2
Record Engine Serial Number..... 135-2
Fuel Injection Pump Serial Number..... 135-2
Cab Serial Number 135-3
Keep Proof of Ownership 135-3
Keep Machines Secure 135-4

Lubrication and Maintenance Records
Service Records
Daily / 10 Hours..... 140-1
Weekly / 50 Hours 140-2
First 100 Hours..... 140-2
250 Hours..... 140-3
500 Hours..... 140-4
1000 Hours..... 140-4
Annual 140-5
1000 Hours..... 140-5
2000 Hours / Two Years 140-6
As Required Service Record 140-7

John Deere Service Literature Available
Technical Information..... JDSLA-1

John Deere Service
John Deere Parts..... 145-1
The Right Tools..... 145-1
Well Trained Technician..... 145-1
Prompt Service 145-2
John Deere Is At Your Service 145-2

jdservicemanual.com

Recognize Safety Information

This is a safety-alert symbol. When you see this symbol on your machine or in this manual, be alert to the potential for personal injury.

Follow recommended precautions and safe operating practices.

T81389 —UN—28JUN13

DX,ALERT -19-29SEP98-1/1

Understand Signal Words

DANGER; The signal word DANGER indicates a hazardous situation which, if not avoided, will result in death or serious injury.

WARNING; The signal word WARNING indicates a hazardous situation which, if not avoided, could result in death or serious injury.

CAUTION; The signal word CAUTION indicates a hazardous situation which, if not avoided, could result in minor or moderate injury. CAUTION may also be used to alert against unsafe practices associated with events which could lead to personal injury.

A signal word—DANGER, WARNING, or CAUTION—is used with the safety-alert symbol. DANGER identifies the most serious hazards. DANGER or WARNING safety signs are located near specific hazards. General precautions are listed on CAUTION safety signs. CAUTION also calls attention to safety messages in this manual.

TS187 —19—30SEP88

DX,SIGNAL -19-05OCT16-1/1

Follow Safety Instructions

Carefully read all safety messages in this manual and on your machine safety signs. Keep safety signs in good condition. Replace missing or damaged safety signs. Be sure new equipment components and repair parts include the current safety signs. Replacement safety signs are available from your John Deere dealer.

There can be additional safety information contained on parts and components sourced from suppliers that is not reproduced in this operator's manual.

Learn how to operate the machine and how to use controls properly. Do not let anyone operate without instruction.

Keep your machine in proper working condition. Unauthorized modifications to the machine may impair the function and/or safety and affect machine life.

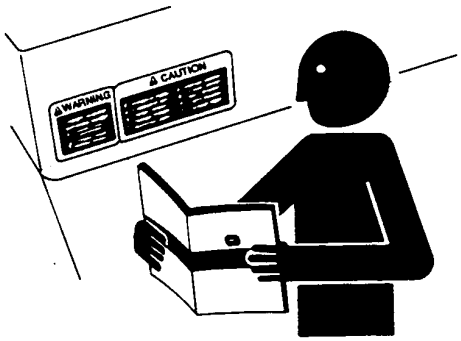

TS201 —UN—15APR13

If you do not understand any part of this manual and need assistance, contact your John Deere dealer.

DX,READ -19-16JUN09-1/1

jdservicemanuals.com

Prepare for Emergencies

Be prepared if a fire starts.

Keep a first aid kit and fire extinguisher handy.

Keep emergency numbers for doctors, ambulance service, hospital, and fire department near your telephone.

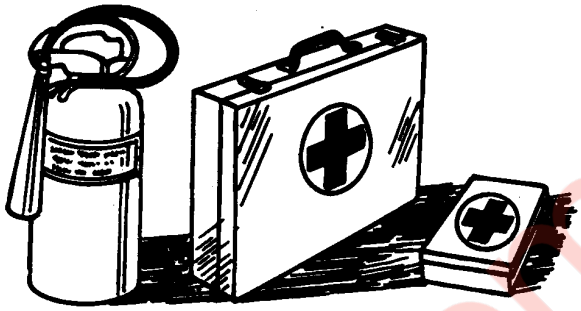

TS291 —UN—15APR13

DX,FIRE2 -19-03MAR93-1/1

Wear Protective Clothing

Wear close fitting clothing and safety equipment appropriate to the job.

Operating equipment safely requires the full attention of the operator. Do not wear radio or music headphones while operating machine.

TS206 —UN—15APR13

DX,WEAR2 -19-03MAR93-1/1

Protect Against Noise

There are many variables that affect the sound level range, including machine configuration, condition and maintenance level of the machine, ground surface, operating environmental, duty cycles, ambient noise, and attachments.

Exposure to loud noise can cause impairment or loss of hearing.

Always wear hearing protection. Wear a suitable hearing protective device such as earmuffs or earplugs to protect against objectionable or uncomfortable loud noises.

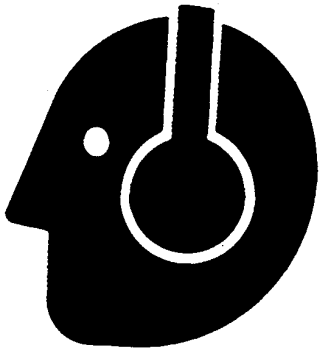

TS207 —UN—23AUG88

DX,NOISE -19-03OCT17-1/1

jdservicemanual.com

Handle Fuel Safely—Avoid Fires

Handle fuel with care: it is highly flammable. Do not refuel the machine while smoking or when near open flame or sparks.

Always stop engine before refueling machine. Fill fuel tank outdoors.

Prevent fires by keeping machine clean of accumulated trash, grease, and debris. Always clean up spilled fuel.

Use only an approved fuel container for transporting flammable liquids.

Never fill fuel container in pickup truck with plastic bed liner. Always place fuel container on ground before refueling. Touch fuel container with fuel dispenser nozzle before removing can lid. Keep fuel dispenser nozzle in contact with fuel container inlet when filling.

TS202 —UN—23AUG88

Do not store fuel container where there is an open flame, spark, or pilot light such as within a water heater or other appliance.

DX,FIRE1 -19-12OCT11-1/1

Handle Starting Fluid Safely

Starting fluid is highly flammable.

Keep all sparks and flame away when using it. Keep starting fluid away from batteries and cables.

To prevent accidental discharge when storing the pressurized can, keep the cap on the container, and store in a cool, protected location.

Do not incinerate or puncture a starting fluid container.

Do not use starting fluid on an engine equipped with glow plugs or an air intake heater.

TS1356 —UN—18MAR92

DX,FIRE3 -19-14MAR14-1/1

Fire Prevention

To reduce the risk of fire, your tractor should be regularly inspected and cleaned.

- Birds and other animals may build nests or bring other flammable materials into the engine compartment or onto the exhaust system. The tractor should be inspected and cleaned prior to the first use each day.
- A build up of grass, crop material and other debris may occur during normal operation. This is especially true when operating in very dry conditions or conditions where airborne crop material or crop dust is present. Any such build up must be removed to ensure proper machine function and to reduce the risk of fire. The tractor must be inspected and cleaned periodically throughout the day.
- Regular and thorough cleaning of the tractor combined with other routine maintenance procedures listed in the Operator's Manual greatly reduce the risk of fire and the chance of costly downtime.
- Do not store fuel container where there is an open flame, spark, or pilot light such as within a water heater or other appliance.
- Check fuel lines, tank, cap, and fittings frequently for damage, cracks or leaks. Replace if necessary.

Follow all operational and safety procedures posted on the machine and the Operator's Manual. Be careful of hot engine and exhaust components during inspection and cleaning. Before carrying out any inspection or cleaning, always shut OFF the engine, place the transmission in PARK or set parking brake, and remove the key. Removal of the key will prevent others from starting the tractor during inspection and cleaning.

DX,WW,TRACTOR,FIRE,PREVENTION -19-12OCT11-1/1

In Case of Fire

CAUTION: Avoid personal injury.

Stop machine immediately at the first sign of fire. Fire may be identified by the smell of smoke or sight of flames. Because fire grows and spreads rapidly, get off the machine immediately and move safely away from the fire. Do not return to the machine! The number one priority is safety.

Call the fire department. A portable fire extinguisher can put out a small fire or contain it until the fire department arrives; but portable extinguishers have limitations. Always put the safety of the operator and bystanders first. If attempting to extinguish a fire, keep your back to the wind with an unobstructed escape path so you can move away quickly if the fire cannot be extinguished.

Read the fire extinguisher instructions and become familiar with their location, parts, and operation before a fire starts. Local fire departments or fire equipment distributors may offer fire extinguisher training and recommendations.

If your extinguisher does not have instructions, follow these general guidelines:

TS227 —UN—15APR13

1. Pull the pin. Hold the extinguisher with the nozzle pointing away from you, and release the locking mechanism.
2. Aim low. Point the extinguisher at the base of the fire.
3. Squeeze the lever slowly and evenly.
4. Sweep the nozzle from side-to-side.

DX,FIRE4 -19-22AUG13-1/1

Avoid Static Electricity Risk When Refueling

The removal of sulfur and other compounds in Ultra-Low Sulfur Diesel (ULSD) fuel decreases its conductivity and increases its ability to store a static charge.

Refineries may have treated the fuel with a static dissipating additive. However, there are many factors that can reduce the effectiveness of the additive over time.

Static charges can build up in ULSD fuel while it is flowing through fuel delivery systems. Static electricity discharge when combustible vapors are present could result in a fire or explosion.

Therefore, it is important to ensure that the entire system used to refuel your machine (fuel supply tank, transfer pump, transfer hose, nozzle, and others) is properly grounded and bonded. Consult with your fuel or fuel system supplier to ensure that the delivery system is in compliance with fueling standards for proper grounding and bonding practices.

RG22142 —UN—17MAR14

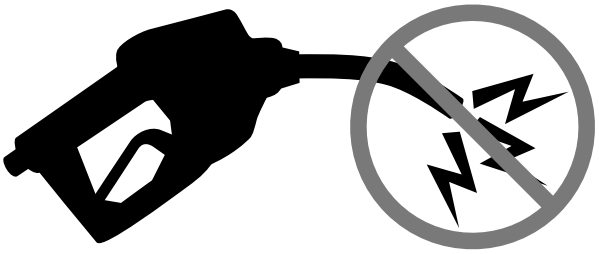

RG21992 —UN—21AUG13

DX,FUEL,STATIC,ELEC -19-12JUL13-1/1

Keep ROPS Installed Properly

Make certain all parts are reinstalled correctly if the roll-over protective structure (ROPS) is loosened or removed for any reason. Tighten mounting bolts to proper torque.

The protection offered by ROPS will be impaired if ROPS is subjected to structural damage, is involved in an overturn incident, or is in any way altered by welding, bending, drilling, or cutting. A damaged ROPS should be replaced, not reused.

The seat is part of the ROPS safety zone. Replace only with John Deere seat approved for your tractor.

Any alteration of the ROPS must be approved by the manufacturer.

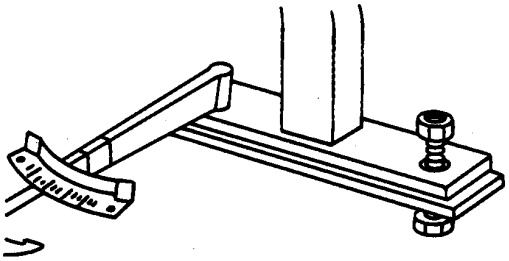

TS212 —UN—23AUG88

DX,ROPS3 -19-12OCT11-1/1

Use Foldable ROPS and Seat Belt Properly

Avoid crushing injury or death during rollover.

- If this machine is equipped with a foldable rollover protective structure (ROPS), keep the ROPS in the fully extended and locked position. USE a seat belt when you operate with a ROPS in the fully extended position.
  - Hold the latch and pull the seat belt across the body.
  - Insert the latch into the buckle. Listen for a click.
  - Tug on the seat belt to make sure that the belt is securely fastened.
  - Snug the seat belt across the hips.
- If this machine is operated with the ROPS folded (for example, to enter a low building), drive with extreme caution. DO NOT USE a seat belt with the ROPS folded.
- Return the ROPS to the raised, fully extended position as soon as the machine is operated under normal conditions.

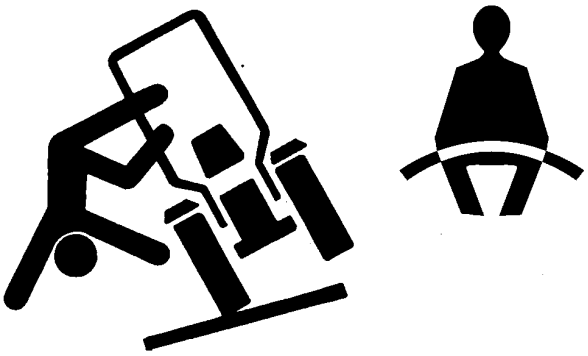

TS1729 —UN—24MAY13

DX,FOLDROPS -19-22AUG13-1/1

Stay Clear of Rotating Drivelines

Entanglement in rotating driveline can cause serious injury or death.

Keep tractor master shield and driveline shields in place at all times. Make sure rotating shields turn freely.

Only use power take-off driveshafts with adequate guards and shields.

Wear close fitting clothing. Stop the engine and be sure that PTO driveline is stopped before making adjustments, connections, or cleaning out PTO driven equipment.

Do not install any adapter device between the tractor and the primary implement PTO driveshaft that will allow a 1000 rpm tractor shaft to power a 540 rpm implement at speeds higher than 540 rpm.

Do not install any adapter device that results in a portion of the rotating implement shaft, tractor shaft, or the adapter to be unguarded. The tractor master shield shall overlap the end of the splined shaft and the added adaptor device as outlined in the table.

The angle at which the primary implement PTO driveshaft can be inclined may be reduced depending on the shape and size of the tractor master shield and the shape and size of the guard of the primary implement PTO driveshaft.

Do not raise implements high enough to damage the tractor master shield or guard of primary implement PTO driveshaft. Detach the PTO driveline shaft if it is necessary to increase implement height. (See Attching/Detaching PTO Driveline)

When using Type 3/4 PTO, inclination and turning angles may be reduced depending on type of PTO master shield and coupling rails.

TS1644 —UN—22AUG95

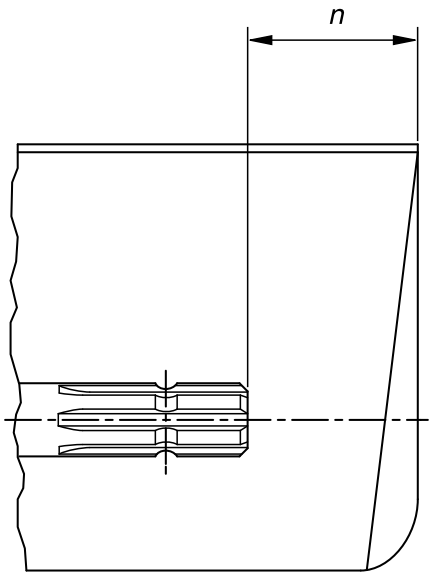

H96219 —UN—29APR10

PTO Type	Diameter	Splines	n ± 5 mm (0.20 in.)
1	35 mm (1.378 in.)	6	85 mm (3.35 in.)
2	35 mm (1.378 in.)	21	85 mm (3.35 in.)
3	45 mm (1.772 in.)	20	100 mm (4.00 in.)
4	57.5 mm (2.264 in.)	22	100 mm (4.00 in.)

DX,PTO -19-28FEB17-1/1

Use Steps and Handholds Correctly

Prevent falls by facing the machine when getting on and off. Maintain 3-point contact with steps, handholds, and handrails.

Use extra care when mud, snow, or moisture present slippery conditions. Keep steps clean and free of grease or oil. Never jump when exiting machine. Never mount or dismount a moving machine.

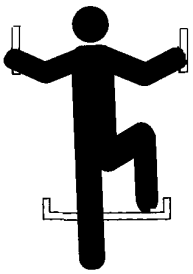

T133468 —UN—15APR13

DX,WW,MOUNT -19-12OCT11-1/1

Read Operator's Manuals for ISOBUS Controllers

In addition to GreenStar™ Applications, this display can be used as a display device for any ISOBUS Controller that meets ISO 11783 standard. This includes capability to control ISOBUS implements. When used in this manner, information and control functions placed on the display are provided by the ISOBUS Controller and are the responsibility of the ISOBUS Controller manufacturer.

GreenStar is a trademark of Deere & Company

Some of these functions could pose a hazard to either the operator or a bystander. Read the Operator's Manual provided by the ISOBUS Controller manufacturer and observe all safety messages in manual and on ISOBUS Controller product prior to use.

NOTE: ISOBUS refers to the ISO Standard 11783

DX,WW,ISOBUS -19-15JUL15-1/1

Use Seat Belt Properly

Avoid crushing injury or death during rollover.

This machine is equipped with a rollover protective structure (ROPS). USE a seat belt when you operate with a ROPS.

- Hold the latch and pull the seat belt across the body.
- Insert the latch into the buckle. Listen for a click.
- Tug on the seat belt latch to make sure that the belt is securely fastened.
- Snug the seat belt across the hips.

Replace entire seat belt if mounting hardware, buckle, belt, or retractor show signs of damage.

Inspect seat belt and mounting hardware at least once a year. Look for signs of loose hardware or belt damage, such as cuts, fraying, extreme or unusual wear, discoloration, or abrasion. Replace only with replacement parts approved for your machine. See your John Deere dealer.

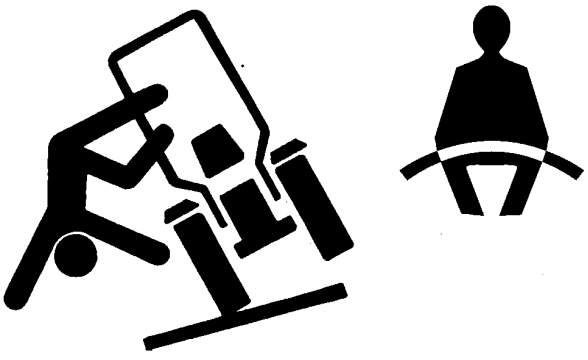

DX,ROPS1 -19-22AUG13-1/1

Operating the Tractor Safely

You can reduce the risk of accidents by following these simple precautions:

- Use your tractor only for jobs it was designed to perform, for example, pushing, pulling, towing, actuating, and carrying a variety of interchangeable equipment designed to conduct agricultural work.
- Operators must be mentally and physically capable of accessing the operator's station and/or controls, and operating the machine properly and safely.
- Never operate machine when distracted, fatigued, or impaired. Proper machine operation requires the operator's full attention and awareness.
- This tractor is not intended to be used as a recreational vehicle.
- Read this operator's manual before operating the tractor and follow operating and safety instructions in the manual and on the tractor.
- Follow operation and ballasting instructions found in the operator's manual for your implements/attachments, such as front loaders.
- Follow the instructions outlined in the operator's manual of any mounted or trailed machinery or trailer. Do not operate a combination of tractor-machine or tractor-trailer unless all instructions have been followed.
- Make sure that everyone is clear of machine, attached equipment, and work area before starting engine or operation.
- Stay clear of the three-point linkage and pickup hitch (if equipped) when controlling them.
- Keep hands, feet, and clothing away from power-driven parts.

Driving Concerns

- Never get on or off a moving tractor.
- Complete any required training prior to operating vehicle.
- Keep all children and nonessential personnel off tractors and all equipment.
- Never ride on a tractor unless seated on a John Deere approved seat with a seat belt.
- Keep all shields/guards in place.
- Use appropriate visual and audible signals when operating on public roads.
- Move to side of road before stopping.
- Reduce speed when turning, applying individual brakes, or operating around hazards on rough ground or steep slopes.
- Stability degrades when attached implements are at high position.
- Couple brake pedals together for road travel.
- Pump brakes when stopping on slippery surfaces.
- Regularly clean fenders and fender valances (mud flaps) if installed. Remove dirt before driving on public roadways.

Heated and Ventilated Operator's Seat

- An overheated seat heater can cause a burn injury or damage to the seat. To reduce the risk of burns, use caution when using the seat heater for extended periods of time, especially if the operator cannot feel temperature change or pain to the skin. Do not place objects on the seat, such as a blanket, cushion, cover, or similar item, which can cause the seat heater to overheat.

Towing Loads

- Be careful when towing and stopping heavy loads. Stopping distance increases with speed and weight of towed loads, and on slopes. Towed loads with or without brakes that are too heavy for the tractor or are towed too fast can cause loss of control.
- Consider the total weight of the equipment and its load.
- Hitch towed loads only to approved couplings to avoid rearward upset.

Parking and Leaving the Tractor

- Before dismounting, shut off SCVs, disengage PTO, stop engine, lower implements/attachments to ground, place implement/attachment control devices in neutral, and securely engage park mechanism, including the park pawl and park brake. In addition, if the tractor is left unattended, remove key.
- Leaving transmission in gear with engine off will NOT prevent the tractor from moving.
- Never go near an operating PTO or an operating implement.
- Wait for all movement to stop before servicing machinery.

Common Accidents

Unsafe operation or misuse of the tractor can result in accidents. Be alert to hazards of tractor operation.

The most common accidents involving tractors are:

- Tractor rollover
- Collisions with motor vehicles
- Improper starting procedures
- Entanglement in PTO shafts
- Falling from tractor
- Crushing and pinching during hitching

DX,WW,TRACTOR -19-08MAY19-1/1

Avoid Backover Accidents

Before moving machine, be sure that all persons are clear of machine path. Turn around and look directly for best visibility. Use a signal person when backing if view is obstructed or when in close quarters.

Do not rely on a camera to determine if personnel or obstacles are behind the machine. The system can be limited by many factors including maintenance practices, environmental conditions, and operating range.

PC10857XW —UN—15APR13

DX,AVOID,BACKOVER,ACCIDENTS -19-30AUG10-1/1

Limited Use in Forestry Operation

The intended use of John Deere tractors when used in forestry operations is limited to tractor-specific applications like transport, stationary work such as log splitting, propulsion, or operating implements with PTO, hydraulic, or electrical systems.

These are applications where normal operation does not present a risk of falling or penetrating objects. Any forestry applications beyond these applications, such as forwarding and loading, requires fitment of application-specific components including Falling Object Protective Structure (FOPS) and/or Operative Protective Structures (OPS). Contact John Deere dealer for special components.

DX,WW,FORESTRY -19-12OCT11-1/1

Operating the Loader Tractor Safely

When operating a machine with a loader application, reduce speed as required to ensure good tractor and loader stability.

To avoid tractor rollover and damage to front tires and tractor, do not carry load with your loader at a speed over 10 km/h (6 mph).

To avoid tractor damage do not use a front loader or a sprayer tank if the tractor is equipped with a 3 Meter Front Axle.

Never allow anyone to walk or work under a raised loader.

Do not use loader as a work platform.

Do not lift or carry anyone on loader, in bucket, or on implement or attachment.

Lower loader to ground before leaving operators station.

The Rollover Protective Structure (ROPS) or cab roof, if equipped, may not provide sufficient protection from load falling onto the operators station. To prevent loads from falling onto the operators station, always use appropriate implements for specific applications (that is, manure forks, round bale forks, round bale grippers, and clampers).

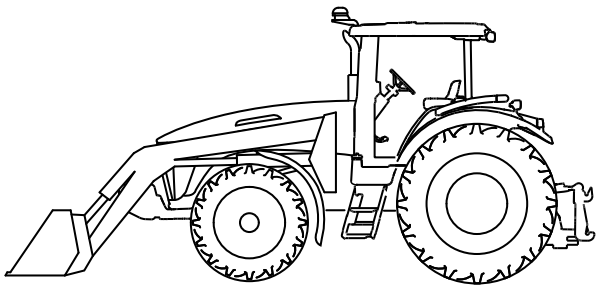

TS1692 —UN—09NOV09

Ballast tractor in accordance to Ballast Recommendations in PREPARE TRACTOR section.

DX,WW,LOADER -19-18SEP12-1/1

Keep Riders Off Machine

Only allow the operator on the machine. Keep riders off.

Riders on machine are subject to injury such as being struck by foreign objects and being thrown off of the machine. Riders also obstruct the operator's view resulting in the machine being operated in an unsafe manner.

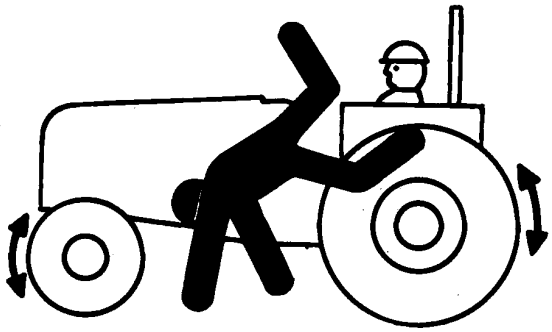

TS290 —UN—23AUG88

DX,RIDER -19-03MAR93-1/1

Instructional Seat

The instructional seat, if so equipped, has been provided only for training operators or diagnosing machine problems.

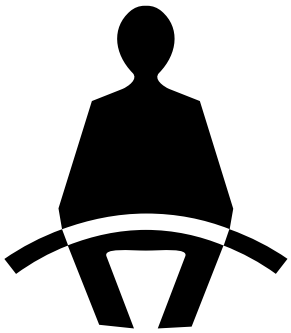

TS1730 —UN—24MAY13

DX,SEAT,NA -19-22AUG13-1/1

Use Safety Lights and Devices

Prevent collisions between other road users, slow moving tractors with attachments or towed equipment, and self-propelled machines on public roads. Frequently check for traffic from the rear, especially in turns, and use turn signal lights.

Use headlights, flashing warning lights, and turn signals day and night. Follow local regulations for equipment lighting and marking. Keep lighting and marking visible, clean, and in good working order. Replace or repair lighting and marking that has been damaged or lost. An implement safety lighting kit is available from your John Deere dealer.

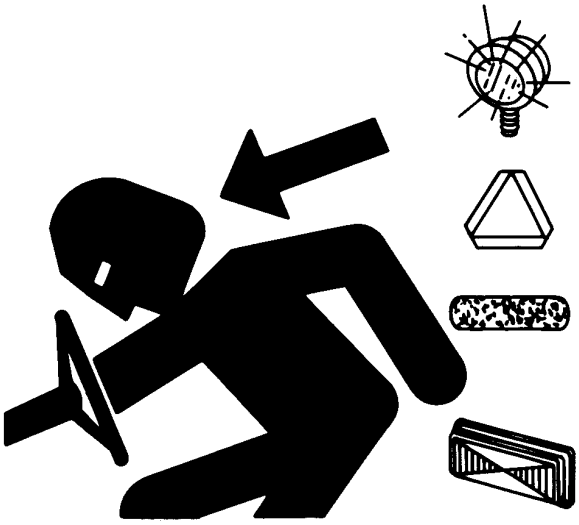

TS951 —UN—12APR90

DX,FLASH -19-07JUL99-1/1

Use a Safety Chain

A safety chain will help control drawn equipment should it accidentally separate from the drawbar.

Using the appropriate adapter parts, attach the chain to the tractor drawbar support or other specified anchor location. Provide only enough slack in the chain to permit turning.

See your John Deere dealer for a chain with a strength rating equal to or greater than the gross weight of the towed machine. Do not use safety chain for towing.

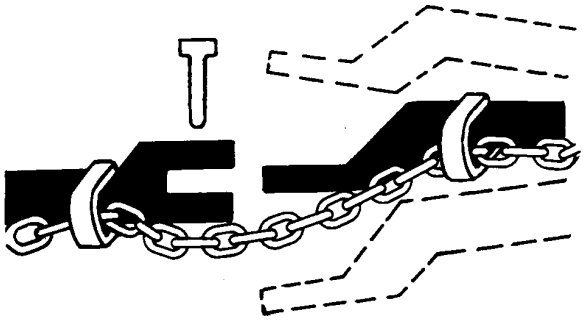

TS217 —UN—23AUG88

DX,CHAIN -19-03MAR93-1/1

Transport Towed Equipment at Safe Speeds

Do not exceed the maximum transport speed. This towing unit may be capable of operating at transport speeds that exceed the maximum allowable transport speed for towed implements.

Before transporting a towed implement, determine from signs on the implement or information provided in the implement's operator manual the maximum transport speed. Never transport at speeds that exceed the implement's maximum transport speed. Exceeding the implement's maximum transport speed can result in:

- Loss of control of the towing unit/implement combination
- Reduced or no ability to stop during braking
- Implement tire failure
- Damage to the implement structure or its components

Implements shall be equipped with brakes if the maximum fully loaded weight is greater than 1500 kg (3307 lbs) and greater than 1.5 times the weight of the towing unit.

Example: Implement mass is 1600 kg (3527 lbs) and towing unit mass is 1600 kg (3527 lbs), example implement is not required to have brakes.

Implements without brakes: Do not transport at speeds greater than 32 km/h (20 mph).

Implements with brakes:

- If the manufacturer does not specify a maximum transport speed, do not tow at speeds greater than 40 km/h (25 mph).
- When transporting at speeds up to 40 km/h (25 mph) the fully loaded implement must weigh less than 4.5 times the towing unit weight.

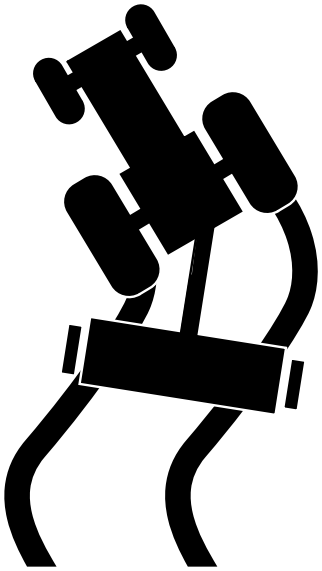

TS1686 —UN—27SEP06

- When transporting at speeds between 40—50 km/h (25—31 mph) the fully loaded implement must weigh less than 3.0 times the towing unit weight.

When towing a trailer, become familiar with the braking characteristics and ensure the compatibility of the tractor/trailer combination in regard to the deceleration rate.

DX,TOW1 -19-28FEB17-1/1

Use Caution on Slopes, Uneven Terrain, and Rough Ground

Avoid holes, ditches, and obstructions which cause the tractor to tip, especially on slopes. Avoid sharp uphill turns.

Driving forward out of a ditch, mired condition, or up a steep slope could cause the tractor to tip over rearward. Back out of these situations if possible.

Danger of overturn increases greatly with narrow tread setting, at high speed.

Not all conditions that can cause a tractor to overturn are listed. Be alert for any situation in which stability may be compromised.

Slopes are a major factor related to loss-of-control and tip-over accidents, which can result in severe injury or death. Operation on all slopes requires extra caution.

Uneven terrain or rough ground can cause loss-of-control and tip-over accidents, which can result in severe injury or death. Operation on uneven terrain or rough ground requires extra caution.

Never drive near the edge of a gully, drop-off, ditch, steep embankment, or a body of water. The machine could suddenly roll over if a wheel goes over the edge or the ground caves in

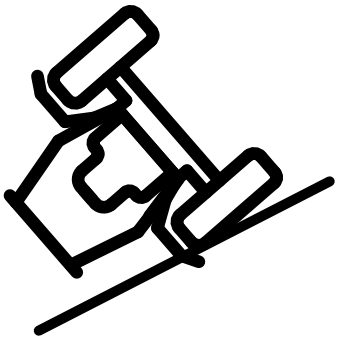

RXA0103437 —UN—01JUL09

Choose a low ground speed so you will not have to stop or shift while on a slope.

Avoid starting, stopping, or turning on a slope. If the tires lose traction, disengage the PTO and proceed slowly, straight down the slope.

Keep all movement on slopes slow and gradual. Do not make sudden changes in speed or direction, which could cause the machine to roll over.

DX,WW,SLOPE -19-28FEB17-1/1

Freeing a Mired Machine

Attempting to free a mired machine can involve safety hazards such as the mired tractor tipping rearward, the towing tractor overturning, and the tow chain or tow bar (a cable is not recommended) failing and recoiling from its stretched condition.

Back your tractor out if it gets mired down in mud. Unhitch any towed implements. Dig mud from behind the rear wheels. Place boards behind the wheels to provide a solid base and try to back out slowly. If necessary, dig mud from the front of all wheels and drive slowly ahead.

If necessary to tow with another unit, use a tow bar or a long chain (a cable is not recommended). Inspect the chain for flaws. Make sure all parts of towing devices are of adequate size and strong enough to handle the load.

Always hitch to the drawbar of the towing unit. Do not hitch to the front pushbar attachment point. Before moving, clear the area of people. Apply power smoothly to take up the slack: a sudden pull could snap any towing device causing it to whip or recoil dangerously.

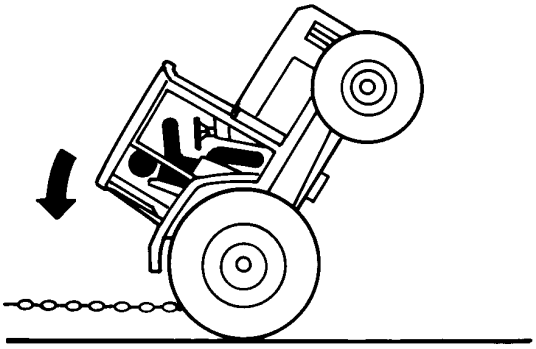

TS1645 —UN—15SEP95

TS263 —UN—23AUG88

DX,MIRED -19-07JUL99-1/1

Avoid Contact with Agricultural Chemicals

This enclosed cab does not protect against inhaling vapor, aerosol or dust. If pesticide use instructions require respiratory protection, wear an appropriate respirator inside the cab.

Before leaving the cab, wear personal protective equipment as required by the pesticide use instructions. When re-entering the cab, remove protective equipment and store either outside the cab in a closed box or some other type of sealable container or inside the cab in a pesticide resistant container, such as a plastic bag.

Clean your shoes or boots to remove soil or other contaminated particles prior to entering the cab.

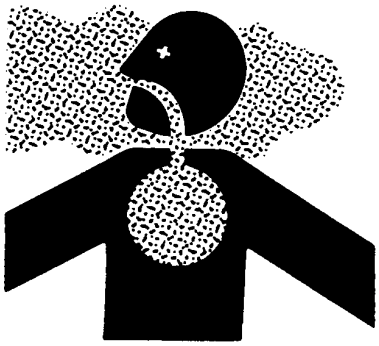

TS220 —UN—15APR13

TS272 —UN—23AUG88

DX,CABS -19-25MAR09-1/1

Handle Agricultural Chemicals Safely

Chemicals used in agricultural applications such as fungicides, herbicides, insecticides, pesticides, rodenticides, and fertilizers can be harmful to your health or the environment if not used carefully.

Always follow all label directions for effective, safe, and legal use of agricultural chemicals.

Reduce risk of exposure and injury:

- Wear appropriate personal protective equipment as recommended by the manufacturer. In the absence of manufacturer's instructions, follow these general guidelines:
  - Chemicals labeled **'Danger'**: Most toxic. Generally require use of goggles, respirator, gloves, and skin protection.
  - Chemicals labeled **'Warning'**: Less toxic. Generally require use of goggles, gloves, and skin protections.
  - Chemicals labeled **'Caution'**: Least toxic. Generally require use of gloves and skin protection.
- Avoid inhaling vapor, aerosol or dust.
- Always have soap, water, and towel available when working with chemicals. If chemical contacts skin, hands, or face, wash immediately with soap and water. If chemical gets into eyes, flush immediately with water.
- Wash hands and face after using chemicals and before eating, drinking, smoking, or urination.
- Do not smoke or eat while applying chemicals.
- After handling chemicals, always bathe or shower and change clothes. Wash clothing before wearing again.
- Seek medical attention immediately if illness occurs during or shortly after use of chemicals.
- Keep chemicals in original containers. Do not transfer chemicals to unmarked containers or to containers used for food or drink.

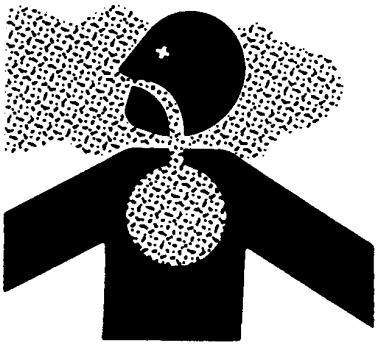

TS220 —UN—15APR13

A34471

A34471 —UN—11OCT88

- Store chemicals in a secure, locked area away from human or livestock food. Keep children away.
- Always dispose of containers properly. Triple rinse empty containers and puncture or crush containers and dispose of properly.

DX,WW,CHEM01 -19-24AUG10-1/1

Handling Batteries Safely

Battery gas can explode. Keep sparks and flames away from batteries. Use a flashlight to check battery electrolyte level.

Never check battery charge by placing a metal object across the posts. Use a voltmeter or hydrometer.

Always remove grounded (-) battery clamp first and replace grounded clamp last.

Sulfuric acid in battery electrolyte is poisonous and strong enough to burn skin, eat holes in clothing, and cause blindness if splashed into eyes.

Avoid hazards by:

- Filling batteries in a well-ventilated area
- Wearing eye protection and rubber gloves
- Avoiding use of air pressure to clean batteries
- Avoiding breathing fumes when electrolyte is added
- Avoiding spilling or dripping electrolyte
- Using correct battery booster or charger procedure.

If acid is spilled on skin or in eyes:

1. Flush skin with water.
2. Apply baking soda or lime to help neutralize the acid.
3. Flush eyes with water for 15—30 minutes. Get medical attention immediately.

If acid is swallowed:

1. Do not induce vomiting.
2. Drink large amounts of water or milk, but do not exceed 2 L (2 qt.).
3. Get medical attention immediately.

WARNING: Battery posts, terminals, and related accessories contain lead and lead compounds, chemicals known to the State of California to cause cancer and reproductive harm. **Wash hands after handling.**

TS204 —UN—15APR13

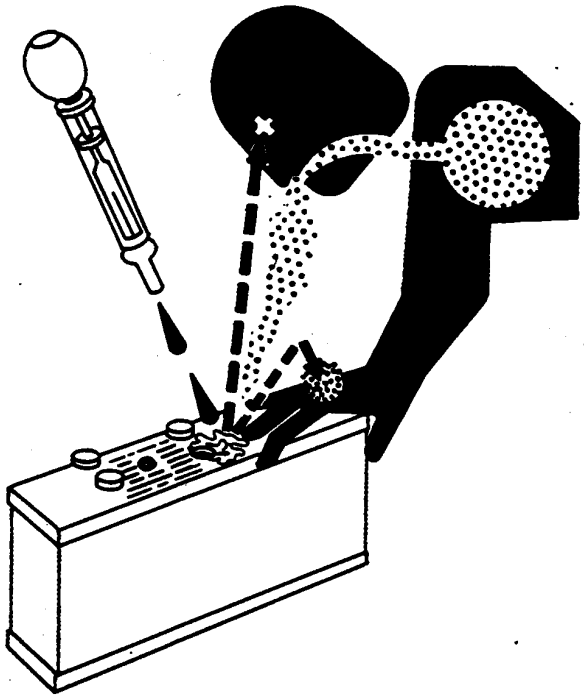

TS203 —UN—23AUG88

DX,WW,BATTERIES -19-02DEC10-1/1

Avoid Heating Near Pressurized Fluid Lines

Flammable spray can be generated by heating near pressurized fluid lines, resulting in severe burns to yourself and bystanders. Do not heat by welding, soldering, or using a torch near pressurized fluid lines or other flammable materials. Pressurized lines can accidentally burst when heat goes beyond the immediate flame area.

TS953 —UN—15MAY90

DX,TORCH -19-10DEC04-1/1

Remove Paint Before Welding or Heating

Avoid potentially toxic fumes and dust.

Hazardous fumes can be generated when paint is heated by welding, soldering, or using a torch.

Remove paint before heating:

- Remove paint a minimum of 100 mm (4 in.) from area to be affected by heating. If paint cannot be removed, wear an approved respirator before heating or welding.
- If you sand or grind paint, avoid breathing the dust. Wear an approved respirator.
- If you use solvent or paint stripper, remove stripper with soap and water before welding. Remove solvent or paint stripper containers and other flammable material from area. Allow fumes to disperse at least 15 minutes before welding or heating.

Do not use a chlorinated solvent in areas where welding will take place.

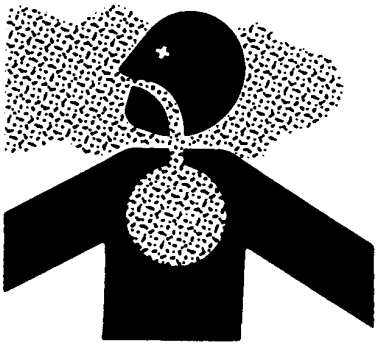

TS220 —UN—15APR13

Do all work in an area that is well ventilated to carry toxic fumes and dust away.

Dispose of paint and solvent properly.

DX,PAINT -19-24JUL02-1/1

Handle Electronic Components and Brackets Safely

Falling while installing or removing electronic components mounted on equipment can cause serious injury. Use a ladder or platform to easily reach each mounting location. Use sturdy and secure footholds and handholds. Do not install or remove components in wet or icy conditions.

If installing or servicing a RTK base station on a tower or other tall structure, use a certified climber.

If installing or servicing a global positioning receiver mast used on an implement, use proper lifting techniques and wear proper protective equipment. The mast is heavy and can be awkward to handle. Two people are required when mounting locations are not accessible from the ground or from a service platform.

TS249 —UN—23AUG88

DX,WW,RECEIVER -19-24AUG10-1/1

Practice Safe Maintenance

Understand service procedure before doing work. Keep area clean and dry.

Never lubricate, service, or adjust machine while it is moving. Keep hands, feet, and clothing away from power-driven parts. Disengage all power and operate controls to relieve pressure. Lower equipment to the ground. Stop the engine. Remove the key. Allow machine to cool.

Securely support any machine elements that must be raised for service work.

Keep all parts in good condition and properly installed. Fix damage immediately. Replace worn or broken parts. Remove any buildup of grease, oil, or debris.

On self-propelled equipment, disconnect battery ground cable (-) before making adjustments on electrical systems or welding on machine.

On towed implements, disconnect wiring harnesses from tractor before servicing electrical system components or welding on machine.

Falling while cleaning or working at height can cause serious injury. Use a ladder or platform to easily reach each location. Use sturdy and secure footholds and handholds.

TS218 —UN—23AUG88

DX,SERV -19-28FEB17-1/1

Avoid Hot Exhaust

Servicing machine or attachments with engine running can result in serious personal injury. Avoid exposure and skin contact with hot exhaust gases and components.

Exhaust parts and streams become very hot during operation. Exhaust gases and components reach temperatures hot enough to burn people, ignite, or melt common materials.

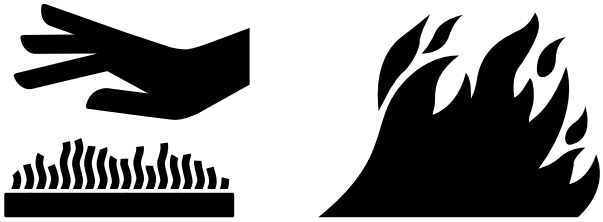

RG17488 —UN—21AUG09

DX,EXHAUST -19-20AUG09-1/1

Clean Exhaust Filter Safely

During exhaust filter cleaning operations, the engine may run at elevated idle and hot temperatures for an extended period of time. Exhaust gases and exhaust filter components reach temperatures hot enough to burn people, or ignite or melt common materials.

Keep machine away from people, animals, or structures which may be susceptible to harm or damage from hot exhaust gases or components. Avoid potential fire or explosion hazards from flammable materials and vapors near the exhaust. Keep exhaust outlet away from people and anything that can melt, burn, or explode.

Closely monitor machine and surrounding area for smoldering debris during and after exhaust filter cleaning.

Adding fuel while an engine is running can create a fire or explosion hazard. Always stop engine before refueling machine and clean up any spilled fuel.

Always make sure that engine is stopped while hauling machine on a truck or trailer.

Contact with exhaust components while still hot can result in serious personal injury.

Avoid contact with these components until cooled to safe temperatures.

If service procedure requires engine to be running:

- Only engage power-driven parts required by service procedure
- Ensure that other people are clear of operator station and machine

Keep hands, feet, and clothing away from power-driven parts.

Always disable movement (neutral), set the parking brake or mechanism and disconnect power to attachments or tools before leaving the operator's station.

Shut off engine and remove key (if equipped) before leaving the machine unattended.

TS227 —UN—15APR13

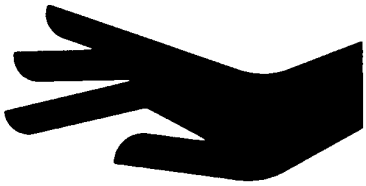

TS271 —UN—23AUG88

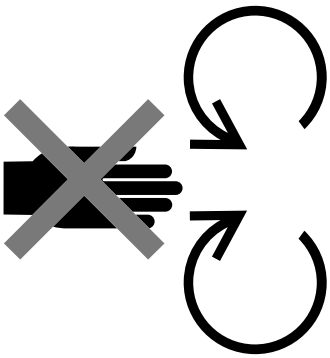

TS1693 —UN—09DEC09

TS1695 —UN—07DEC09

DX,EXHAUST,FILTER -19-12JAN11-1/1

Work In Ventilated Area

Engine exhaust fumes can cause sickness or death. If it is necessary to run an engine in an enclosed area, remove the exhaust fumes from the area with an exhaust pipe extension.

If you do not have an exhaust pipe extension, open the doors and get outside air into the area.

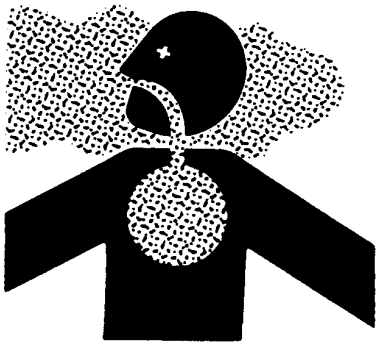

TS220 —UN—15APR13

DX,AIR -19-17FEB99-1/1

Support Machine Properly

Always lower the attachment or implement to the ground before you work on the machine. If the work requires that the machine or attachment be lifted, provide secure support for them. If left in a raised position, hydraulically supported devices can settle or leak down.

Do not support the machine on cinder blocks, hollow tiles, or props that may crumble under continuous load. Do not work under a machine that is supported solely by a jack. Follow recommended procedures in this manual.

When implements or attachments are used with a machine, always follow safety precautions listed in the implement or attachment operator's manual.

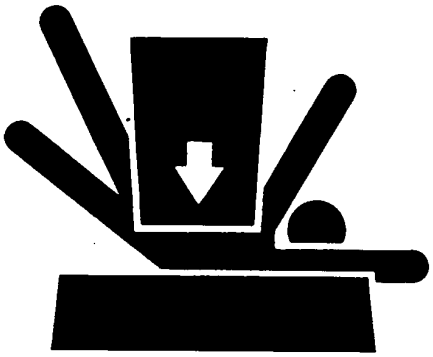

TS229 —UN—23AUG88

DX,LOWER -19-24FEB00-1/1

Prevent Machine Runaway

Avoid possible injury or death from machinery runaway.

Do not start engine by shorting across starter terminals. Machine will start in gear if normal circuitry is bypassed.

NEVER start engine while standing on ground. Start engine only from operator’s seat, with transmission in neutral or park.

TS177 —UN—11JAN89

DX,BYPAS1 -19-29SEP98-1/1

Park Machine Safely

Before working on the machine:

- Lower all equipment to the ground.
- Stop the engine and remove the key.
- Disconnect the battery ground strap.
- Hang a "DO NOT OPERATE" tag in operator station.

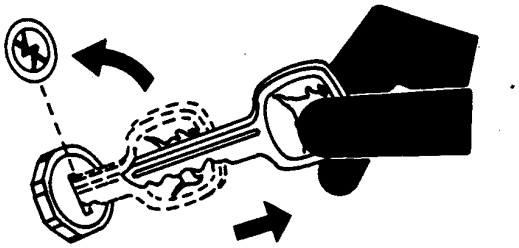

TS230 —UN—24MAY89

DX,PARK -19-04JUN90-1/1

Transport Tractor Safely

A disabled tractor is best transported on a flatbed carrier. Use chains to secure the tractor to the carrier. The axles and tractor frame are suitable attachment points.

Before transporting the tractor on a low-loader truck or flatbed rail wagon, make sure that the hood is secured over the tractor engine and that doors, roof hatch (if equipped) and windows are properly closed.

Never tow a tractor at a speed greater than 10 km/h (6 mph). An operator must steer and brake the tractor under tow.

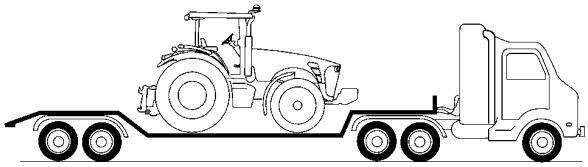

RXA0103709 —UN—01JUL09

DX,WW,TRANSPORT -19-19AUG09-1/1

Service Cooling System Safely

Explosive release of fluids from pressurized cooling system can cause serious burns.

Shut off engine. Only remove filler cap when cool enough to touch with bare hands. Slowly loosen cap to first stop to relieve pressure before removing completely.

TS281 —UN—15APR13

DX,WW,COOLING -19-19AUG09-1/1

Service Accumulator Systems Safely

Escaping fluid or gas from systems with pressurized accumulators that are used in air conditioning, hydraulic, and air brake systems can cause serious injury. Extreme heat can cause the accumulator to burst, and pressurized lines can be accidentally cut. Do not weld or use a torch near a pressurized accumulator or pressurized line.

Relieve pressure from the pressurized system before removing accumulator.

Relieve pressure from the hydraulic system before removing accumulator. Never attempt to relieve hydraulic system or accumulator pressure by loosening a fitting.

Accumulators cannot be repaired.

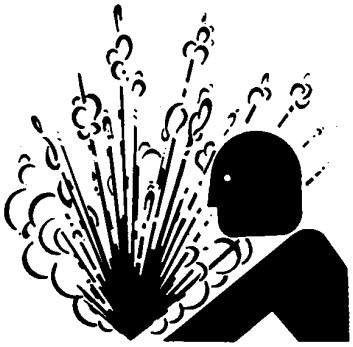

TS281 —UN—15APR13

DX,WW,ACCLA2 -19-22AUG03-1/1

Service Tires Safely

Explosive separation of a tire and rim parts can cause serious injury or death.

Do not attempt to mount a tire unless you have the proper equipment and experience to perform the job.

Always maintain the correct tire pressure. Do not inflate the tires above the recommended pressure. Never weld or heat a wheel and tire assembly. The heat can cause an increase in air pressure resulting in a tire explosion. Welding can structurally weaken or deform the wheel.

When inflating tires, use a clip-on chuck and extension hose long enough to allow you to stand to one side and NOT in front of or over the tire assembly. Use a safety cage if available.

Check wheels for low pressure, cuts, bubbles, damaged rims, or missing lug bolts and nuts.

RXA0103438 —UN—11JUN09

Wheels and tires are heavy. When handling wheels and tires use a safe lifting device or get an assistant to help lift, install, or remove.

DX,WW,RIMS -19-28FEB17-1/1

Service Front-Wheel Drive Tractor Safely

When servicing front-wheel drive tractor with the rear wheels supported off the ground and rotating wheels by engine power, always support front wheels in a similar manner. Loss of electrical power or transmission hydraulic system pressure will engage the front driving wheels, pulling the rear wheels off the support if front wheels are not raised. Under these conditions, front drive wheels can engage even with switch in disengaged position.

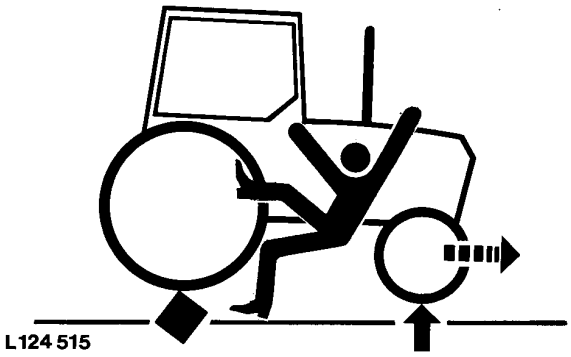

L124515 —UN—06AUG94

DX,WW,MFWD -19-19AUG09-1/1

Tightening Wheel Retaining Bolts/Nuts

Torque wheel retaining bolts/nuts at the intervals specified in section Break-In Period and Service.

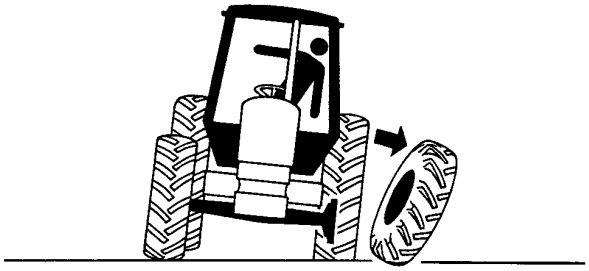

L124516 —UN—03JAN95

DX,WW,WHEEL -19-12OCT11-1/1

Avoid High-Pressure Fluids

Inspect hydraulic hoses periodically – at least once per year – for leakage, kinking, cuts, cracks, abrasion, blisters, corrosion, exposed wire braid or any other signs of wear or damage.

Replace worn or damaged hose assemblies immediately with John Deere approved replacement parts.

Escaping fluid under pressure can penetrate the skin causing serious injury.

Avoid the hazard by relieving pressure before disconnecting hydraulic or other lines. Tighten all connections before applying pressure.

Search for leaks with a piece of cardboard. Protect hands and body from high-pressure fluids.

If an accident occurs, see a doctor immediately. Any fluid injected into the skin must be surgically removed within a few hours or gangrene may result. Doctors unfamiliar with this type of injury should reference a knowledgeable medical source. Such information is available in English from Deere & Company Medical Department in Moline, Illinois, U.S.A., by calling 1-800-822-8262 or +1 309-748-5636.

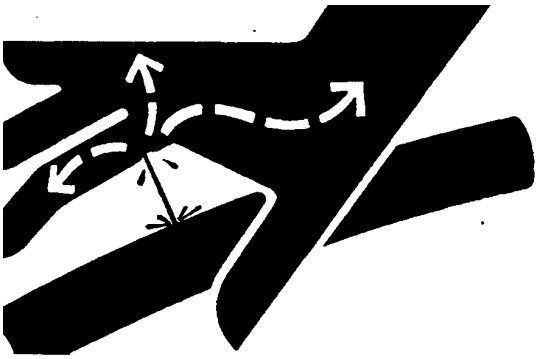

X9811 —UN—23AUG88

DX,FLUID -19-12OCT11-1/1

Do Not Open High-Pressure Fuel System

High-pressure fluid remaining in fuel lines can cause serious injury. Do not disconnect or attempt repair of fuel lines, sensors, or any other components between the high-pressure fuel pump and nozzles on engines with High Pressure Common Rail (HPCR) fuel system.

Only technicians familiar with this type of system can perform repairs. (See your John Deere dealer.)

TS1343 —UN—18MAR92

DX,WW,HPCR1 -19-07JAN03-1/1

Store Attachments Safely

Stored attachments such as dual wheels, cage wheels, and loaders can fall and cause serious injury or death.

Securely store attachments and implements to prevent falling. Keep playing children and bystanders away from storage area.

TS219 —UN—23AUG88

DX,STORE -19-03MAR93-1/1

Decommissioning — Proper Recycling and Disposal of Fluids and Components

Safety and environmental stewardship measures must be taken into account when decommissioning a machine and/or component. These measures include the following:

- Use appropriate tools and personal protective equipment such as clothing, gloves, face shields or glasses, during the removal or handling of objects and materials.
- Follow instructions for specialized components.
- Release stored energy by lowering suspended machine elements, relaxing springs, disconnecting the battery or other electrical power, and releasing pressure in hydraulic components, accumulators, and other similar systems.
- Minimize exposure to components which may have residue from agricultural chemicals, such as fertilizers and pesticides. Handle and dispose of these components appropriately.
- Carefully drain engines, fuel tanks, radiators, hydraulic cylinders, reservoirs, and lines before recycling components. Use leak-proof containers when draining fluids. Do not use food or beverage containers.
- Do not pour waste fluids onto the ground, down a drain, or into any water source.
- Observe all national, state, and local laws, regulations, or ordinances governing the handling or disposal of waste fluids (example: oil, fuel, coolant, brake fluid); filters; batteries; and, other substances or parts. Burning of flammable fluids or components in other than specially designed incinerators may be prohibited by law and could result in exposure to harmful fumes or ashes.
- Service and dispose of air conditioning systems appropriately. Government regulations may require a certified service center to recover and recycle air conditioning refrigerants which could damage the atmosphere if allowed to escape.
- Evaluate recycling options for tires, metal, plastic, glass, rubber, and electronic components which may be recyclable, in part or completely.
- Contact your local environmental or recycling center, or your John Deere dealer for information on the proper way to recycle or dispose of waste.

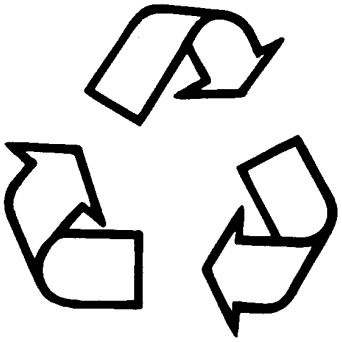

TS1133 —UN—15APR13

DX,DRAIN -19-01JUN15-1/1

Danger Decal — Starting Engine

Start only from the seat in park or neutral.

Starting in gear kills.

NOTE: This decal is applicable other than PowrReverser™ Tractors.

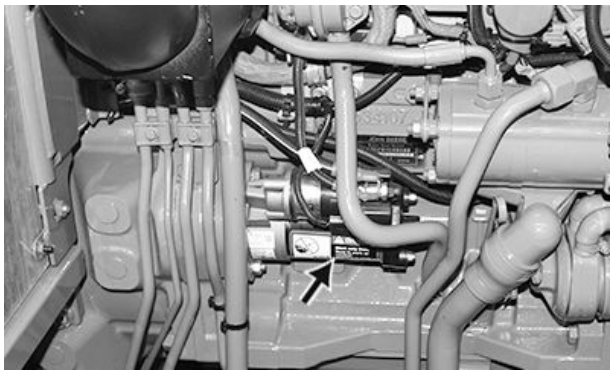

On Starter Body (Right Side of Cowl)

PY35467 —UN—14FEB17

P/N: R140208

PY17638 —UN—19DEC12

PowrReverser is a trademark of Deere & Company

WKJQUWJ,00007FC -19-08SEP20-1/1

Warning Decal — ROPS

If canopy or sunshade is attached to the ROPS structure, the weight must be limited to 100 lb. (45 Kg) or less.

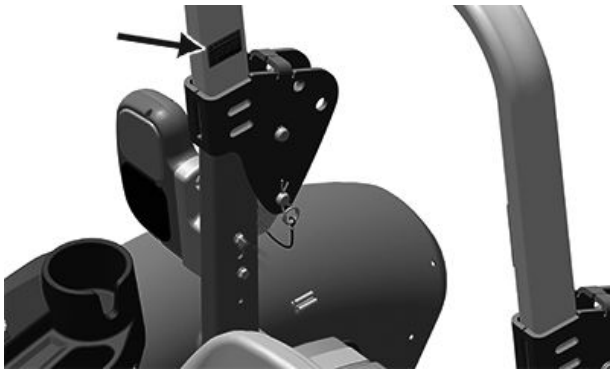

On ROPS (Right Side)

PY41761 —UN—04JUL17

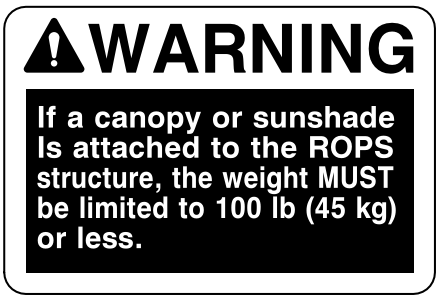

P/N: R141735

PY15506 —UN—21JUN12

MD36154,00001CD -19-04JUL17-1/1

Warning Decal — Avoid Crushing

AVOID CRUSHING

- Keep Rollover Protective Structure fully extended.
- Do not jump if machine tips.
- Use seat belt.

When structure must be down:

- DO NOT use seat belt.
- Drive with extra care.

PY41760 —UN—04JUL17

Left Fender

PY16318 —UN—23AUG12

P/N: R114475

MD36154,00001D1 -19-27JUL17-1/1

Caution Decal — Safety Instructions

1. Read Operator's Manual before operating this tractor.
2. Keep all shields in place.
3. Hitch towed loads only to drawbar to avoid rearward upset.
4. Make certain everyone is clear of machine before starting engine operation.
5. Keep all riders off tractor and equipment.
6. Keep hands, feet and clothing away from power-driven parts.
7. Reduce speed when turning or applying individual brakes or operating around hazards, on rough ground or steep slopes.
8. Couple brake pedals together for road travel.
9. Use flashing warning lights on highway unless prohibited by law.
10. Stop engine, lower equipment to ground and shift to "PARK" or set brakes securely before dismounting.
11. Wait for all movement to stop before servicing machinery.
12. Remove key if leaving tractor unattended.

PY41759 —UN—14JUL17

Left Fender — Operator Station

PY15508 —UN—21JUN12

P/N: R117679

MD36154,00001CE -19-04JUL17-1/1

Safety Decals — Cab

PY20835 —UN—03SEP14

Inside of the Cab

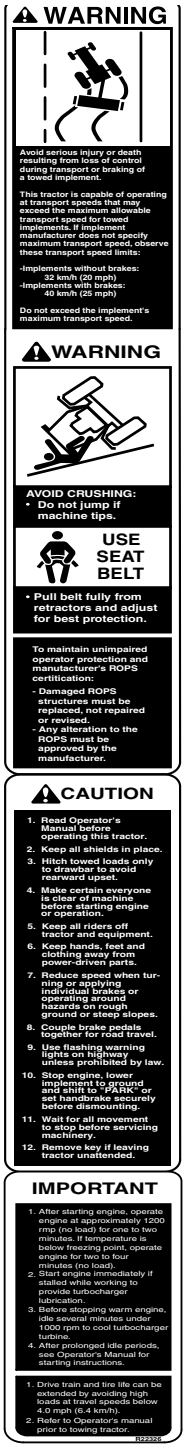

P/N: R223236

PY18149 —UN—10MAY13

WARNING:

Avoid serious injury or death resulting from loss of control during transport or braking of a towed implement.

This tractor is capable of operating at transport speeds that may exceed the maximum allowable transport speed for towed implements. If implement manufacturer does not specify maximum transport speed, observe these transport speed limits:

Continued on next page

SD74272,000054A -19-14AUG14-1/2

- Implements without brakes: 32 Km/h (20 mph)
- Implements with brakes: 40 Km/h (25 mph)

Do not exceed the implement's maximum transport speed.

AVOID CRUSHING:

- Do not jump if machine tips.

USE SEAT BELT:

- Pull belt fully from retractors and adjust for best protection.

To maintain unimpaired operator protection and manufacturer's ROPS certification:

- Damaged ROPS structures must be replaced, not repaired or revised.
- Any alteration to the ROPS must be approved by the manufacturer.

CAUTION:

1. Read Operator's Manual before operating this tractor.
2. Keep all shields in place.
3. Hitch towed loads only to drawbar to avoid rearward upset.
4. Make certain everyone is clear of machine before starting engine operation.
5. Keep all riders off tractor and equipment.
6. Keep hands, feet and clothing away from power-driven parts.
7. Reduce speed when turning or applying individual brakes or operating around hazards, on rough ground or steep slopes.
8. Couple brake pedals together for road travel.
9. Use flashing warning lights on highway unless prohibited by law.
10. Stop engine, lower equipment to ground and shift to "PARK" or set brakes securely before dismounting.
11. Wait for all movement to stop before servicing machinery.
12. Remove key if leaving tractor unattended.

IMPORTANT:

1. After starting engine, operate engine at approximately 1200 rpm (no load) for one to two minutes. If temperature is below freezing point, operate engine for two to four minutes (no load).
2. Start engine immediately if stalled while working to provide turbocharger lubrication.
3. Before stopping warm engine, idle several minutes under 1000 rpm to cool turbocharger turbine.
4. After prolonged idle periods, see Operator's Manual for starting instructions.

1. Drive train and tire life can be extended by avoiding high loads at travel speeds below 4.0 mph (6.4 Km/h).
2. Refer to Operator's manual prior to towing tractor.

SD74272,000054A -19-14AUG14-2/2

Warning Decal — PTO Shield

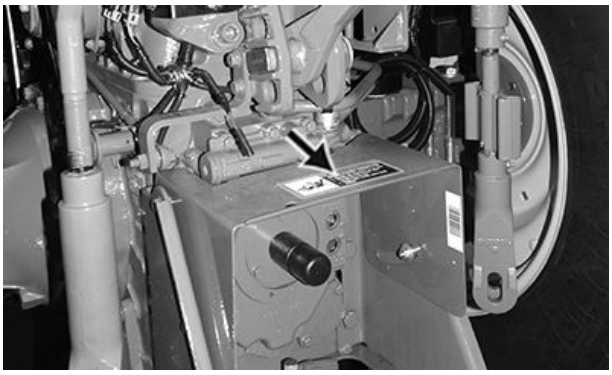

PY35470 —UN—14FEB17

PY20943 —UN—10JUN15

P/N: R122717

Avoid injury from PTO
- Keep all shields in place.
- Keep hands, feet, clothing away.
- Operate only with 540 RPM.

MD36154,00001CF -19-10APR17-1/1

Instructional Seat (If Equipped)

CAUTION: Avoid crushing during rollover.

The Instructional seat should not be used while in field operation. Riders are permitted only on a properly installed Instructional seat approved by John Deere. When using the Instructional seat, always use the seat belt.

LV15838 —UN—26JUN12

PY41525 —UN—04MAY17

Instructional Seat Safety Label

MD36154,00001D0 -19-04MAY17-1/1

Tractor Controls — OOS (PowrReverser™ Transmission)

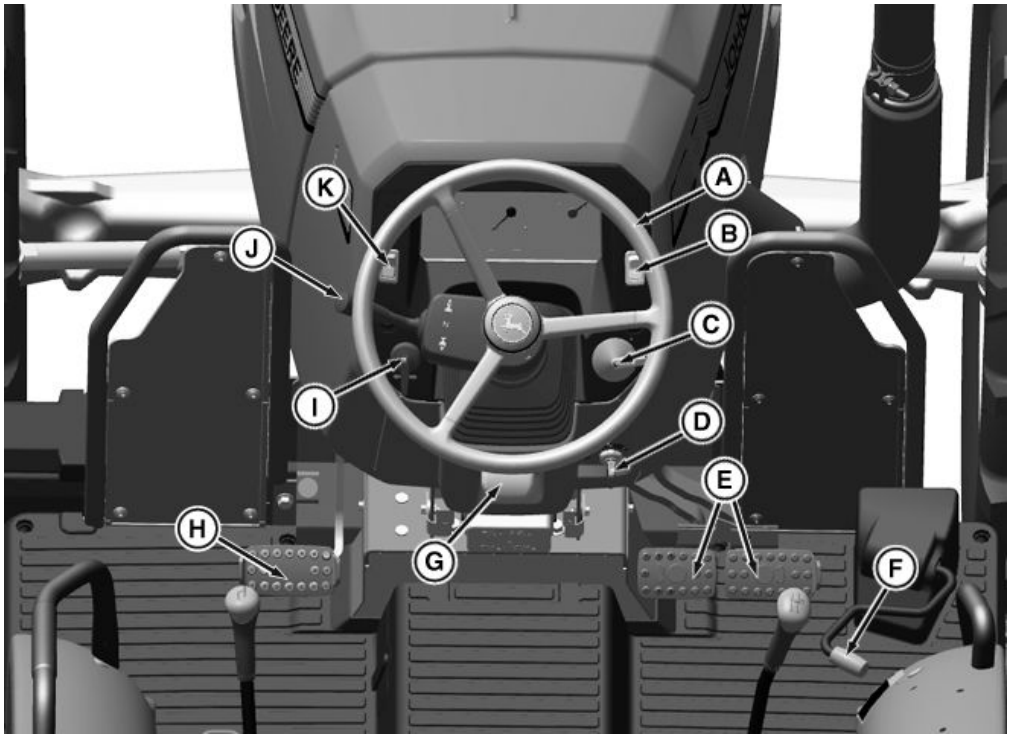

PY32598 —UN—07APR17

A—Steering Wheel
B—Regeneration Switch
C—Light Switch
D—Key Switch
E—Brake Pedals
F—Foot Throttle
G—Steering Wheel Tilt Lever (If Equipped)
H—Clutch Pedal
I— Turn Signal Switch
J— FNR Lever
K—Roll Mode Switch

Continued on next page

VS70618,0000199 -19-10JUL17-1/2

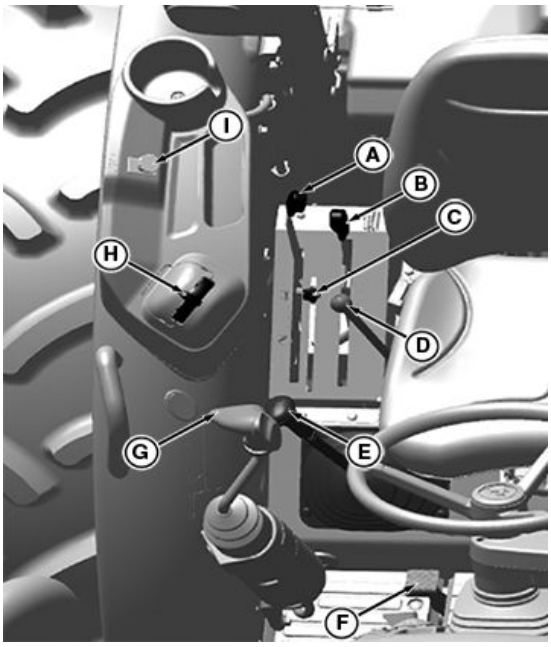

Right-Hand Side

PY37318 —UN—01FEB17

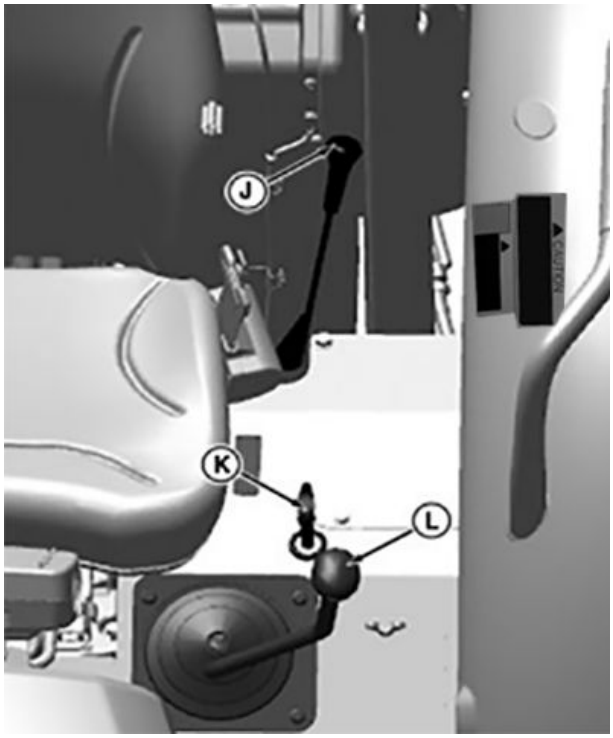

Left-Hand Side

PY37319 —UN—21JUL17

A—Rockshaft Position Control Lever
B—Rockshaft Draft Control Lever
C—Position Control Stop Knob
D—SCV Lever
E—Gear Shift Lever
F—Differential Lock Pedal
G—Midmount SCV Joystick (If Equipped)
H—Hand Throttle
I— Rear PTO Switch
J— Dual PTO Lever
K—MFWD Lever
L— Range Shift Lever
M—Rockshaft Rate-Of-Drop Knob

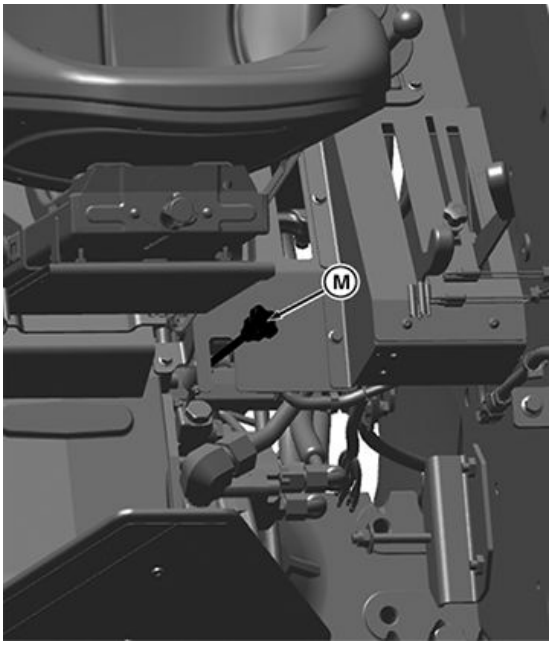

Right Side Back Of The Seat

PY37320 —UN—01FEB17

VS70618,0000199 -19-10JUL17-2/2

Tractor Controls — OOS (SyncShuttle Transmission)

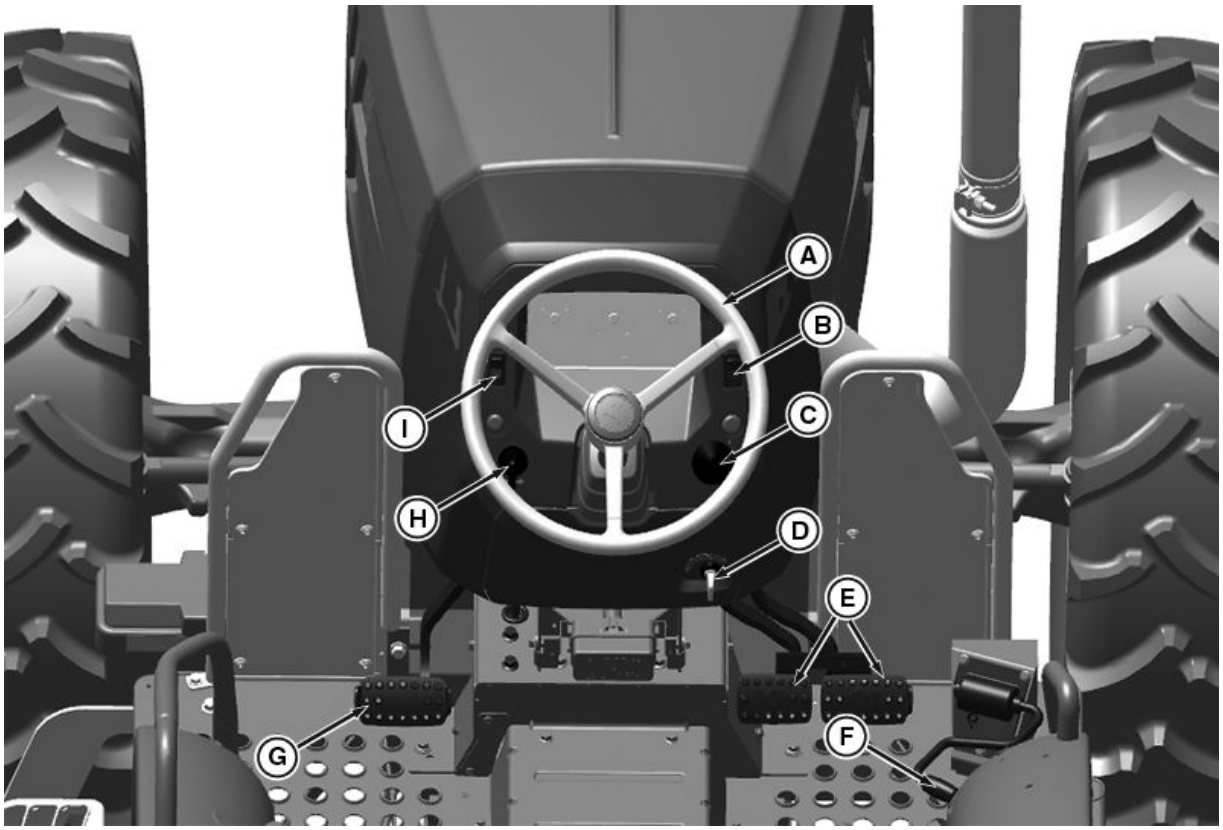

PY37321 —UN—01FEB17

A—Steering Wheel
B—Regeneration Switch
C—Light Switch
D—Key Switch
E—Brake Pedals
F—Foot Throttle
G—Clutch Pedal
H—Turn Signal Switch
I— Role Mode Switch

Continued on next page

VS70618,000019A -19-11JUL17-1/3

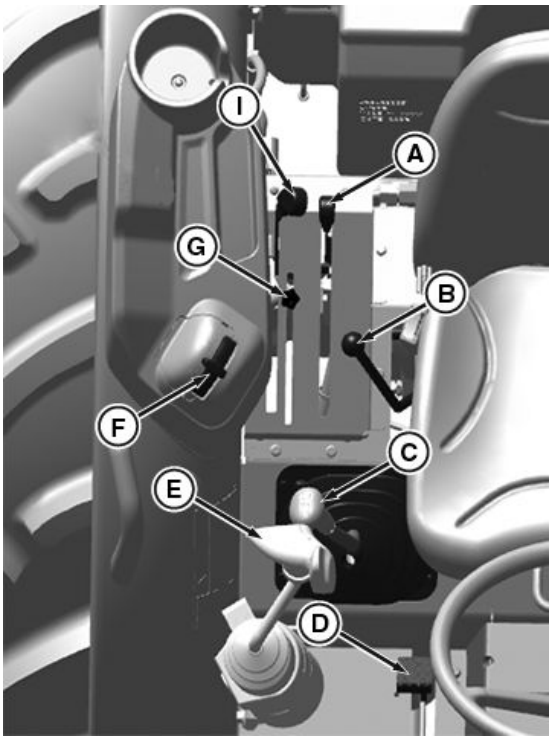

Right-Hand Side

PY37322 —UN—11JUL17

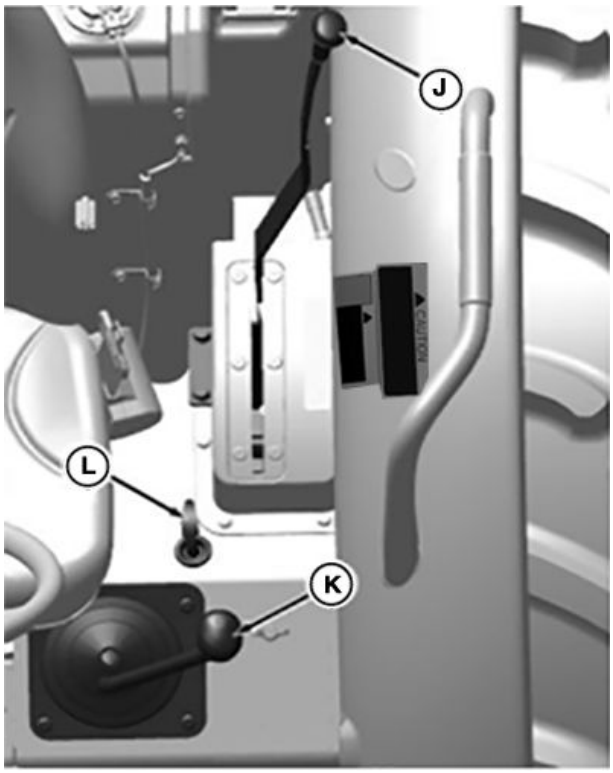

Left-Hand Side

PY37323 —UN—20JUL17

Only for 5075E 2WD

PY32600 —UN—20JUL17

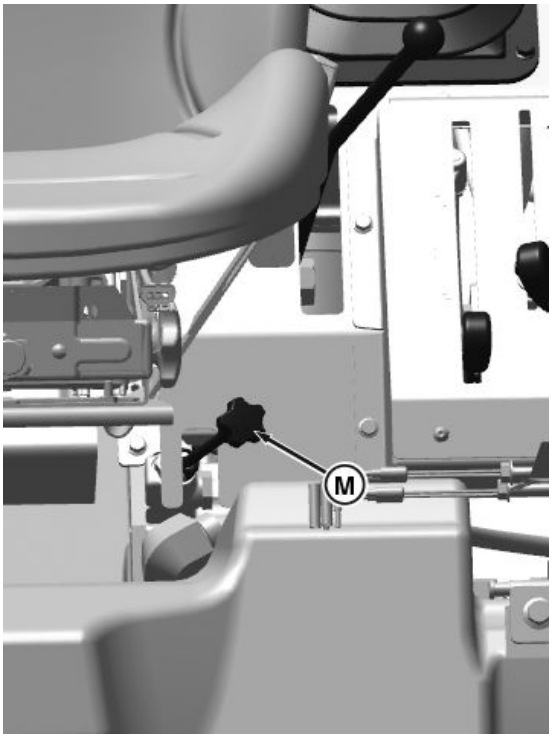

Right Side Back Of The Seat

PY37324 —UN—07FEB17

Continued on next page

VS70618,000019A -19-11JUL17-2/3

A—Rockshaft Draft Control Lever
B—SCV Lever
C—Gear Shift Lever
D—Differential Lock Pedal
E—Midmount SCV Joystick (If Equipped)
F—Hand Throttle
G—Position Control Stop Knob
I— Rockshaft Position Control Lever
J—PTO Lever
K—Range shift Lever
L—MFWD Lever
M—Rockshaft Rate-Of-Drop Knob

VS70618,000019A -19-11JUL17-3/3

Tractor Controls — Cab (SyncShuttle Transmission)

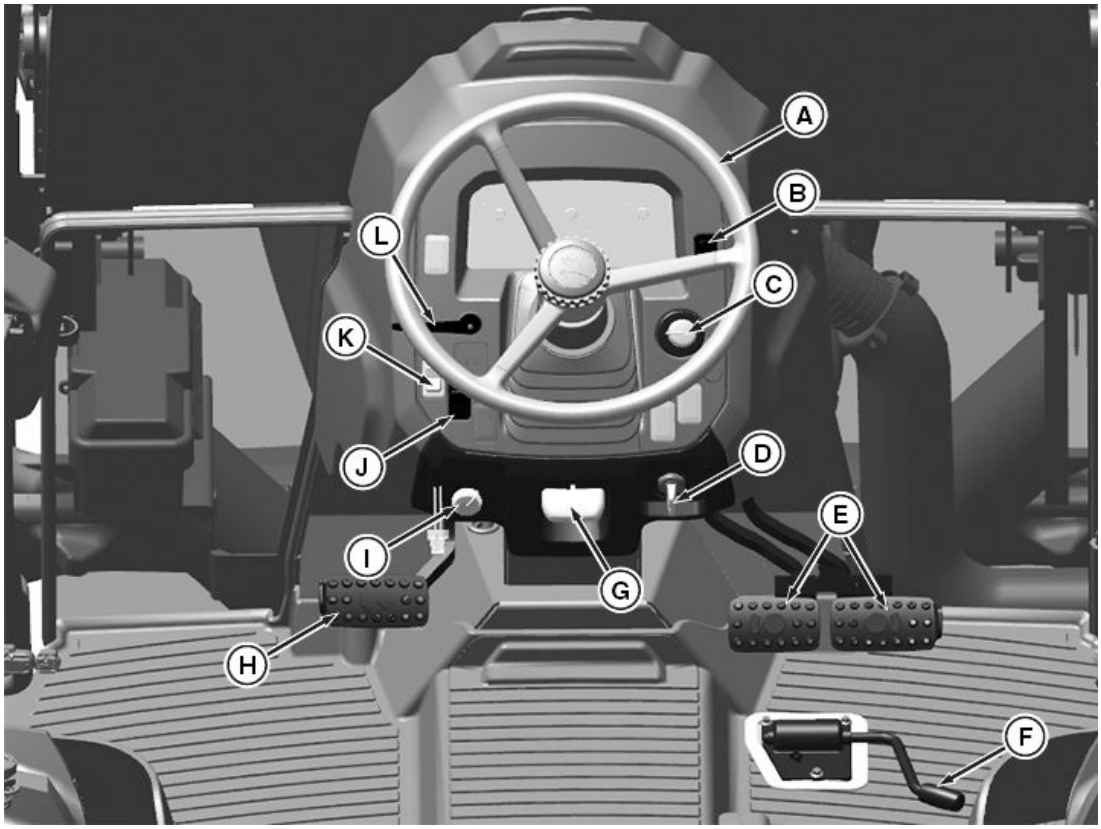

PY37326 —UN—07FEB17

A—Steering Wheel
B—Regeneration Switch
C—Wiper Switch
D—Key Switch
E—Brake Pedals
F—Foot Throttle
G—Steering Wheel Tilt Lever (If Equipped)
H—Clutch Pedal
I— Light Switch
J—High / Low Beam Switch
K—Roll Mode Switch
L—Turn Signal Lever

Continued on next page

MM12389,000002F -19-11JUL17-1/2

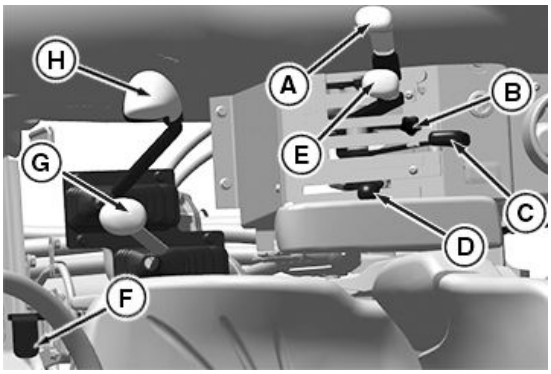

PY37327 —UN—07FEB17

Right-Hand side — SyncShuttle

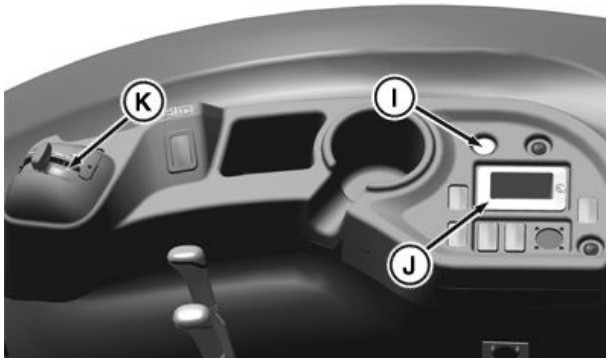

PY43066 —UN—11JUL17

Right-Hand side — SyncShuttle

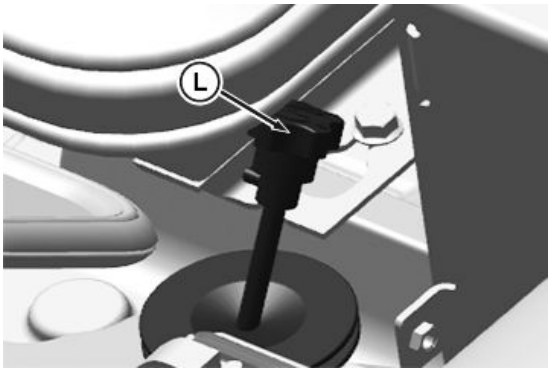

PY37329 —UN—07FEB17

Rockshaft Rate-of-Drop Valve — SyncShuttle

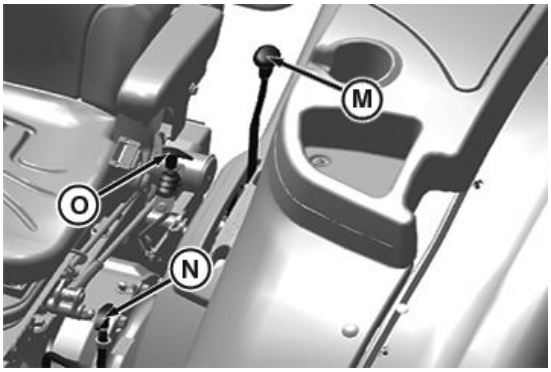

PY37330 —UN—07FEB17

Left-Hand Side — SyncShuttle

A—SCV I Lever
B—Position Control Stop Knob
C—Rockshaft Position Control Lever
D—Rockshaft Draft Control Lever
E—SCV II Lever (If Equipped)
F—Differential Lock Pedal
G—Range Shift Lever
H—Gear Shift Lever
I— Cigarette Lighter (If Equipped)
J—Ashtray
K—Hand Throttle
L—Rockshaft Rate-Of-Drop Knob
M—PTO Lever
N—MFWD Lever
O—Rear PTO

MM12389,000002F -19-11JUL17-2/2

Tractor Controls — Cab (PowrReverser™ Transmission)

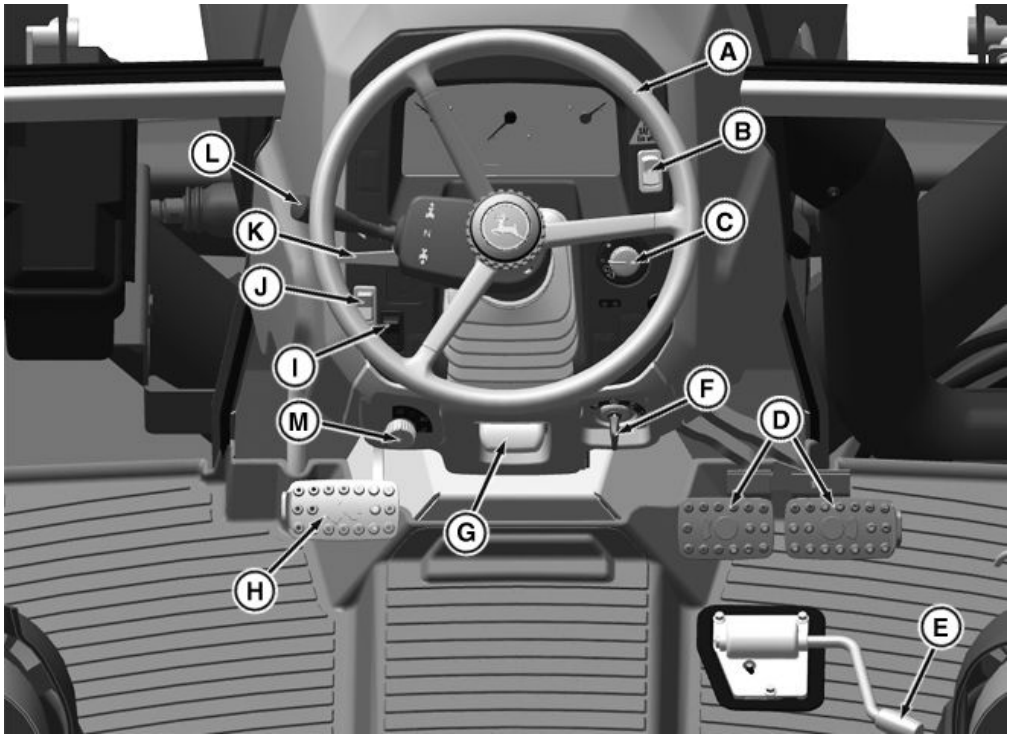

PY32599 —UN—07APR17

A—Steering Wheel
B—Regeneration Switch
C—Wiper Switch
D—Brake Pedals
E—Foot Throttle
F—Key Switch
G—Steering Wheel Tilt Lever
H—Clutch Pedal
I— High / Low Beam Switch
J—Roll Mode Switch
K—Turn Signal Lever
L—FNR Lever
M—Light Switch

Continued on next page

VS70618,000019B -19-14JUL17-1/2

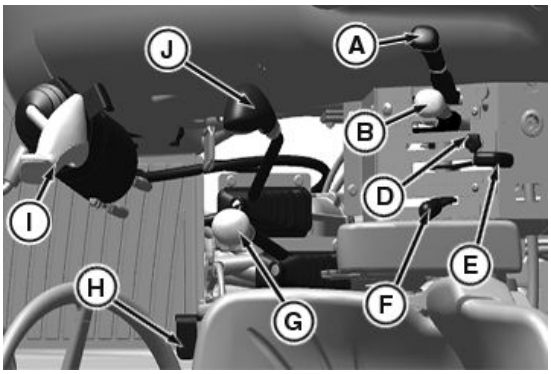

PY37332 —UN—10FEB17

Right-Hand side

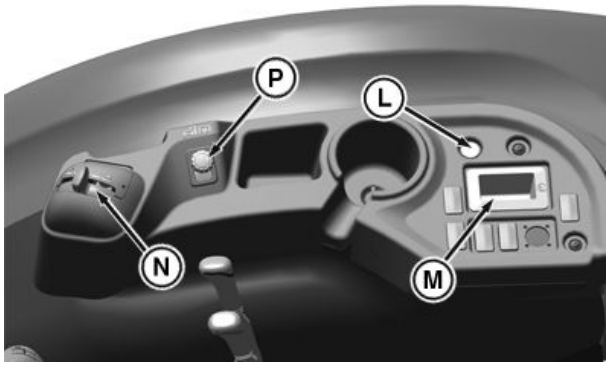

PY43065 —UN—14JUL17

Right-Hand side

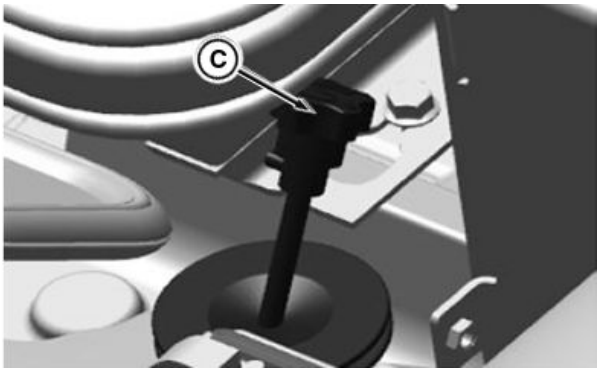

PY37335 —UN—14JUL17

Rockshaft Rate-of-Drop Valve

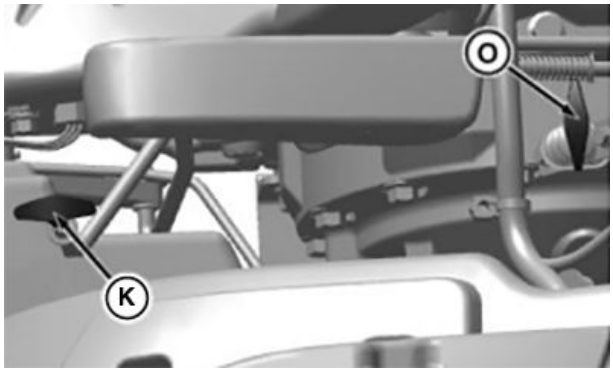

PY37334 —UN—14JUL17

Left-Hand Side

A—SCV II Lever (If Equipped)
B—SCV I Lever
C—Rockshaft Rate-Of-Drop Knob
D—Position Control Stop Knob
E—Rockshaft Position Control Lever
F—Rockshaft Draft Control Lever
G—Range Shift Lever
H—Differential Lock Pedal
I—Midmount SCV Joystick(If Equipped)
J—Gear Shift Lever
K—MFWD Lever
L—Cigarette Lighter (If Equipped)
M—Ashtray
N—Hand Throttle
O—Economy PTO Lever
P—Rear PTO Switch

VS70618,000019B -19-14JUL17-2/2

Instrument Panel

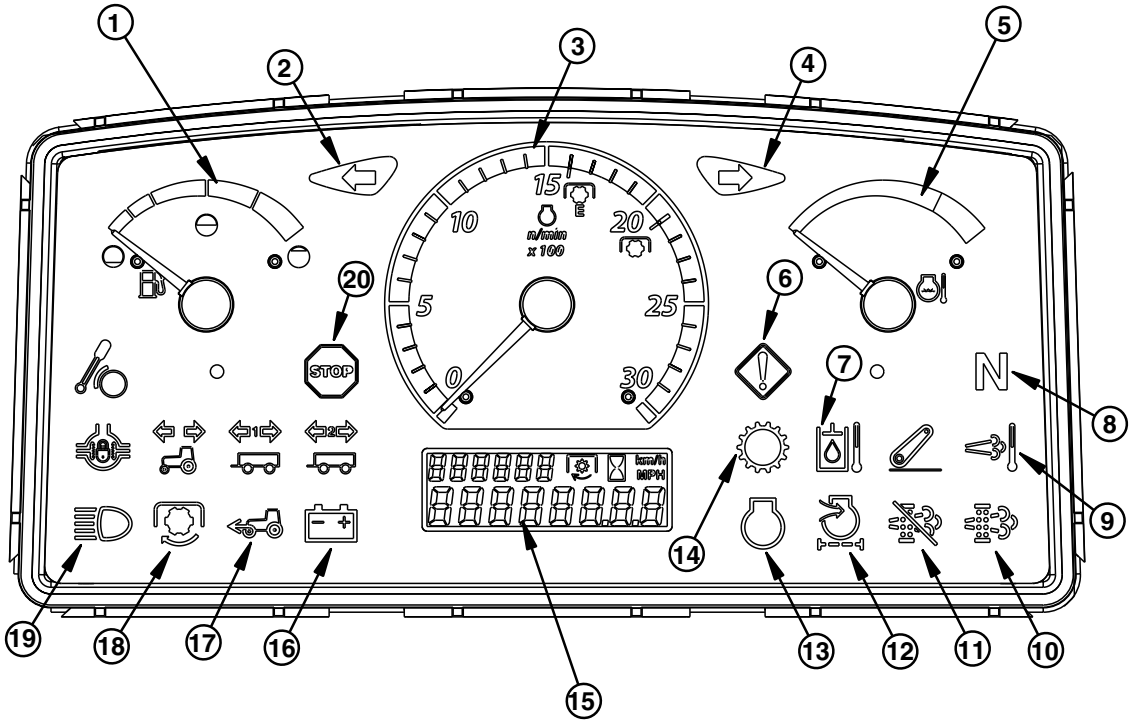

PY37336 —UN—13JUL17

Instrument Panel

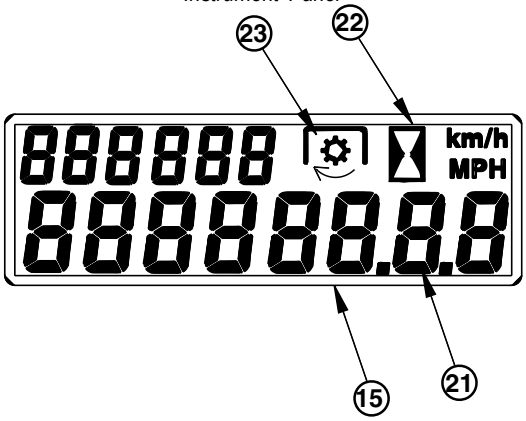

PY37337 —UN—13JUL17

1— Fuel Level Gauge
2— Left Turn Indicator
3— Tachometer
4— Right Turn Indicator
5— Engine Coolant Temperature Gauge
6— Service Alert Indicator
7— Hydraulic Oil Temperature (For PowrReverser™ Transmission Only)
8— Transmission Neutral Indicator
9— High Exhaust Temperature Indicator
10— Exhaust Filter Indicator
11— Exhaust Filter Disable Indicator
12— Engine Air Cleaner Restriction Indicator
13— Engine Information Indicator
14— Transmission Information Indicator (For PowrReverser™ Transmission Only)
15— Information Display
16— Charging System Indicator
17— MFWD Indicator
18— PTO Engaged Indicator
19— High Beam Indicator
20— STOP Indicator
21— Vehicle Ground Speed
22— Hour Meter Icon
23— Rear PTO Speed

NOTE: **12x12 PR Transmission:** *Hour Meter/Ground Speed (LCD Digital) displays hours when the tractor is not moving. When the tractor is moving, display switches to ground speed. When the tractor is stopped, display changes back to hours.*

NOTE: **9X3 SyncShuttle Transmission:** *Hour Meter(LCD Digital) displays only engine hours irrespective of tractor is moving or at stationary.*

Continued on next page

VS70618,000019C -19-26JUL17-1/2

1	Fuel Level Gauge	Indicates Fuel level in the tank.
2	Left Turn Indicator	Flashes when turn signal switch is switched to the left-hand side.
3	Tachometer	Indicates engine speed, revolutions per minute (rpm).
4	Right Turn Indicator	Flashes when turn signal switch is switched to the right-hand side.
5	Engine Coolant Temperature Gauge	Indicates engine coolant temperature. Red area indicates overheat (coolant level too low, dirty radiator, or clogged screen). Shutoff engine IMMEDIATELY to prevent damage. If necessary, have the John Deere dealer diagnose vehicle.
6	Service Alert Indicator	Illuminates when a malfunction occurs (review error message in Information Display). If necessary, have the John Deere dealer diagnose vehicle.
7	Hydraulic Oil Temperature	Illuminates when hydraulic oil overheats. If necessary, have the John Deere dealer diagnose vehicle.
8	Transmission Neutral Indicator	Illuminates when transmission reverser (if equipped) in neutral position. Flashes when operator improperly shifted to reverse. If necessary, cycle reverser lever back to neutral. If neutral indicator is flashing and transmission information indicator is illuminated at the same time, It indicates a malfunction (review error message in Information Display). If necessary, have the John Deere dealer diagnose vehicle.
9	High Exhaust Temperature Indicator	Illuminates when exhaust gas temperature is high, elevated idle is active, or exhaust filter cleaning is in progress.
10	Exhaust Filter Indicator	Illuminates when exhaust filter cleaning is in progress, aftertreatment system has a fault, or exhaust filter is in need of cleaning.
11	Exhaust Filter Disable Indicator	Illuminates when operator has engaged the disable auto exhaust filter cleaning function.
12	Engine Air Cleaner Restriction Indicator	Illuminates when air cleaner element is clogged (clean or replace element). If necessary, have the John Deere dealer diagnose vehicle.
13	Engine Information Indicator	Oil pressure indicator lights if engine oil pressure is low. Indicator must light when key is turned to engage starter and go out when engine starts. It illuminates when Engine DTC's are active.
14	Transmission Information Indicator	Illuminates when transmission DTC is active. If necessary, have the John Deere dealer diagnose vehicle.
15	Information Display	Displays various vehicle information outputs.
16	Charging System Indicator	Illuminates when charging system malfunction occurs. If necessary, have the John Deere dealer diagnose vehicle.
17	MFWD Indicator	Illuminates when mechanical front-wheel drive is engaged.
18	PTO Engaged Indicator	Illuminates when rear PTO is switched on. A separate indicator is used for ground PTO speed indication.
19	High Beam Indicator	Illuminates when the headlights are switched to the high beam.
20	STOP Indicator	Illuminates when a serious malfunction occurs. SHUT OFF engine IMMEDIATELY and determine cause (review error message in Information Display). If necessary, have the John Deere dealer diagnose vehicle.
21	Vehicle Information Display	Displays engine hours, speedometer, diagnostic trouble codes, and regeneration status.
22	Hour Meter Icon	Illuminates when display is indicating engine hours.
23	Rear PTO Indicator (PR)	Comes on when the rear PTO is switched on. It displays PTO Speed.

VS70618,000019C -19-26JUL17-2/2

Information Display (Roll Mode Switch)

Roll mode switch (A) controls two different information display modes, “Normal” and “Diagnostic”.

Information Display - Normal Mode

Roll mode switch (A) and information display (B) default to the normal mode. In normal mode: Information display (B) provides a numeric representation of engine hours, vehicle speed, or PTO speed.

- Press and release the roll mode switch (A) to cycle through the information display (B) values (engine hours, vehicle speed, and PTO speed).

Roll Mode Sequence Order
Engine Hours
Vehicle Speed[a]
PTO Speed[a]
Regeneration Progress Stage 1[b]
Regeneration Progress Stage 2[b]
Regeneration Progress Stage 3[b]

[a] *If Equipped.*
[b] *Items shall only be available when a valid value is present.*

- Engine hours are displayed when the key switch is first turned on.
- Engine hours are displayed for at least 7 seconds before automatically switching to any other value.
- Display (B) automatically transitions to the vehicle speed when the tractor begins moving.
- Display (B) automatically transitions to PTO speed when the PTO is engaged.
- Display (B) disables automatic scrolling once roll mode switch (A) is pressed or used to scroll through display modes.
- PTO speed is only displayed, when the enable PTO speed display is configured in the ICC diagnostic address 026 (1 = enabled) (If vehicle is equipped with electrohydraulic PTO.)
- The display (B) only re-enables automatic scrolling when the key switch is cycled on and off.
- During the exhaust filter cleaning process, the display (B) transitions through the various exhaust filter cleaning states.

Information Display – Diagnostic Mode

The diagnostic mode has two levels of access; “Customer” and “Technician”.

- Customer access — Press and hold roll mode switch for 5 seconds to begin diagnostic session. This action allows access to see diagnostic trouble codes and a limited number of diagnostic addresses.
- Technician access — **Only for John Deere dealer use.** Accesses everything in customer mode plus vehicle set-up, configuration, and calibration.

Customer access; recall, record, and clear diagnostic trouble codes:

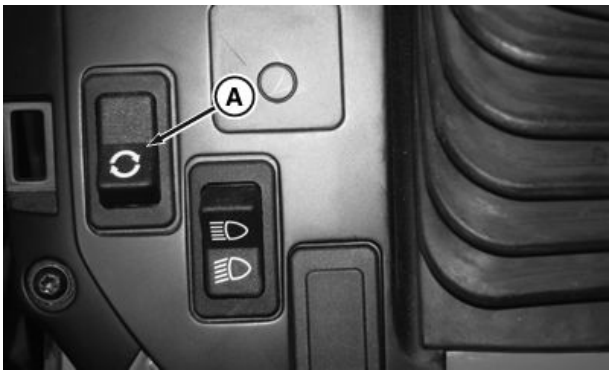

Roll Mode Switch (Cab shown)

PY16305 —UN—08AUG12

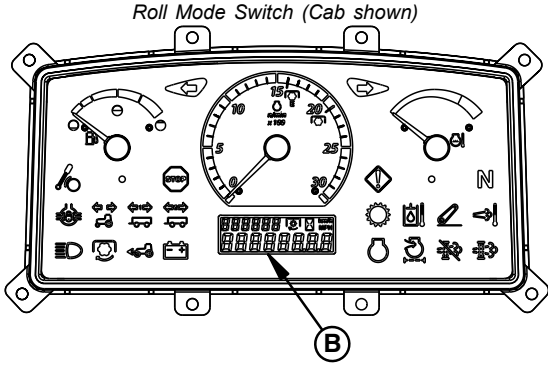

Instrument Panel

PY37339 —UN—09FEB17

A— Roll Mode Switch **B— Information Display**

- Press and hold the roll mode switch for 5 seconds to begin diagnostic session.
- Upon entering diagnostics, any active or previously active codes automatically appear in a scrolling fashion with each one showing the control unit (three letter abbreviation) and the code number (XXXXXX.XX).
- To view and/or clear diagnostic trouble codes for any given control unit, do the following:

1. Use the right turn signal switch to scroll to the desired control unit.
2. Press and release the roll mode switch to enter the diagnostic addresses for that desired control unit.
3. Use the right turn signal switch to scroll to the diagnostic address 001 for that desired control unit.
4. If codes are present the word "codes" appears. If not, the word "none" appears.
5. Press and release the roll mode switch to view all code details for this control unit.
6. Any codes present in that control unit appears there in scrolling fashion for multiple codes.
7. To access the option for clearing codes for this selected control unit, press and release the right turn signal switch.
8. The question "CLR ?" appears.
9. To clear the codes, press and release the roll mode switch.
10. To go back to the entire control unit list, press and release the left turn signal switch.

Continued on next page

VS70618,000019E -19-06APR17-1/2

11. Proceed to the next desired control unit by repeating steps 1-10.

VS70618,000019E -19-06APR17-2/2

Overhead Control Panel — Cab

A—Air Conditioning/Defrost Switch
B—Air Conditioning Temperature Control Knob
C—Heater Temperature Control Knob
D—Blower Speed Knob
E—Directional Air Louver (6 used)
F—Recirculating Air Intake (2 used)

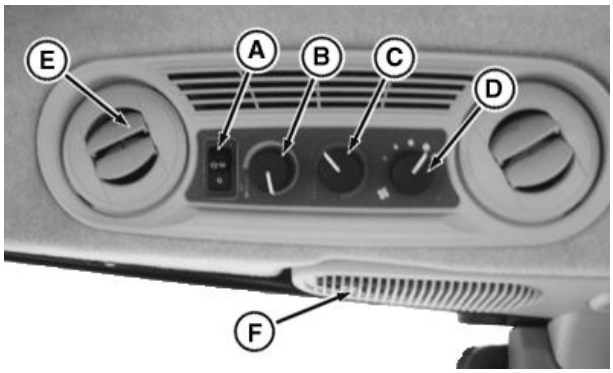

PY16083 —UN—19JUN12

Right-Hand Side

VS70618,000019D -19-10JUL17-1/1

Light Switch Positions — OOS

CAUTION: To alert drivers of other vehicles to your movements, use flashing warning lights whenever you travel on public roads. Flashing lights come ON in Warning, Full beam headlight position, and Low-Beam Headlight positions.

Light switch has four operating positions:

Warning position (B): Warning lights flash, instrument panel illuminates, turn signal arrows on the instrument panel flash. This position is for driving on roads during daytime.

CAUTION: Never use work lights when driving on roads. Dim headlights for oncoming traffic. Bright lights could blind or confuse other drivers.

Low-beam headlights position (C): Use to dim headlights to low beams when meeting other vehicles as they approach from the front.

Full beam headlights position (D): Use when traveling on public roads at night or during daylight hours when visibility is limited.

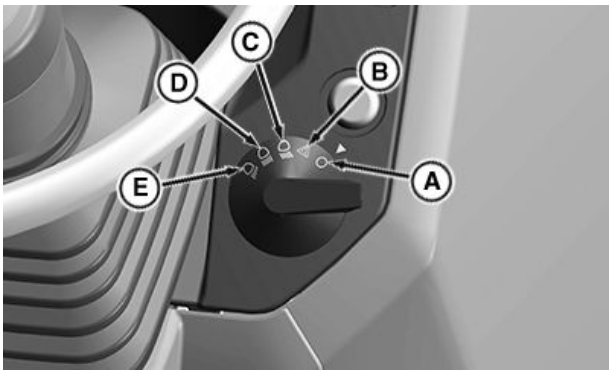

PY39669 —UN—07FEB17

Light Switch

A—Off Position
B—Warning Position
C—Low-Beam Headlights position
D—Full beam headlights position
E—Field Light Position

Field light position (E): Use to activate rear facing field light and high beam headlights.

IMPORTANT: Keep lighting in good working order. Repair or replace damaged lighting immediately.

Switch Position	Warning Lights Amber[a]	Tail Lights Red[a]	Field Lights[b] Rear Facing	Field Lights Front Facing (If Equipped)	Headlights Front Grille
A—Off	Off	Off	Off	Off	Off
B—Warning	On Flashing	Off	Off	Off	Off
C—Low-beam headlights position	On Flashing	On Steady	Off	Off	On—Low Beams
D—Full beam headlights position	On Flashing	On Steady	Off	Off	On—High Beams
E—Field Light	Off	Off	On	On	On—High Beams

[a]*When turn signal is activated, amber and red lights on turn-side flash, while opposite side lights shine steady.*
[b]*Standard equipment. Straddle Mount has a single work light mounted behind the operator seat.*

VP27597,0000337 -19-29SEP17-1/1

Light Switch Positions — Cab

A—OFF : All lights off. Instrument panel will illuminate for approximately 6 seconds after switch is turned off.

B—Warning Light : Warning lights flash, instrument panel illuminates, turn signal arrows on instrument panel flash and courtesy light (cab) is on. This position is for driving on roads during daytime.

C—Road lights (Position 1) : Head lights and tail lights (red) on, warning lights flash, instrument panel illuminates, turn signal arrows on instrument panel flash and courtesy light (cab) is on. This position is for driving on roads during daytime or nighttime.

D—Field lights (Position 2) : Head lights and tail lights (red) on, work lights on, instrument panel illuminates and courtesy light (cab) is on. This position is for field use only.

CAUTION: Never use work lights when driving on roads. Dim headlights for oncoming traffic. Bright lights could blind or confuse other drivers.

E—High/Low beam switch : Active when light switch is in positions (C or D).

- Switch DOWN—Low/dim headlights on
- Switch UP—High/bright headlights on. High beam indicator on instrument panel also illuminates.

Dim headlights when approaching other vehicles, bright lights may blind or confuse other drivers.

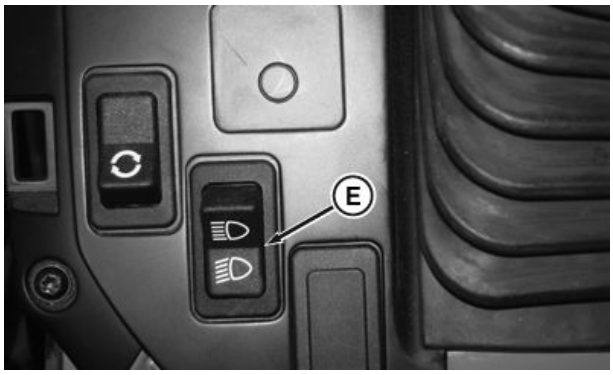

PY14591 —UN—07AUG12

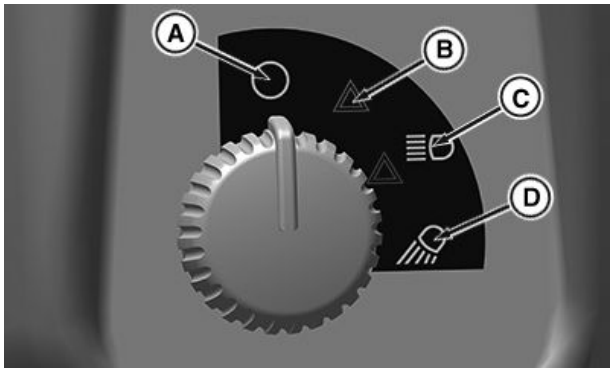

PY40806 —UN—31MAR17

A—OFF
B—Warning Light Position
C—Road Lights Position
D—Field Light Position
E—High/Low Beam Switch

Light Switch Operation				
Position	**Warning Lights Amber[a]**	**Tail Lights Red[a]**	**Field Lights[b]**	**Head Lights**
OFF	OFF	OFF	OFF	OFF
Triangle (Warning)	FLASH	OFF	OFF	OFF
1 (Road)	FLASH	ON	OFF	ON
2 (Field)	OFF	ON	ON	ON

[a]*When turn signal is activated, amber and red lights on turn-side flash, while opposite side lights shine steady.*
[b]*Standard equipment. Cab tractors have four work lights (2 front (optional) and 2 rear) mounted to the roof.*

VP27597,0000338 -19-19MAY17-1/1

Using Headlights — OOS

CAUTION: Never use work lights when driving on roads. Dim headlights for oncoming traffic.

Bright lights could blind or confuse other drivers.

Dual-beam headlights (A) are used for the highway driving, day, or night. They are turned on in field lights position (D), bright headlights position (C), or dim headlights position (B) with the light switch.

Always use dim headlights (B) when meeting another vehicle.

Keep headlights adjusted properly. (See ADJUST HEADLIGHTS in Maintenance—Electrical System section.)

A—Headlights
B—Low-Beam Headlights Position
C—Full Beam Headlights Position
D—Field Lights Position

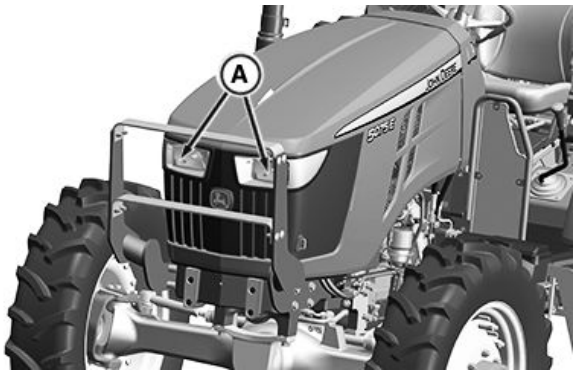

PY39674 —UN—07FEB17

Headlights

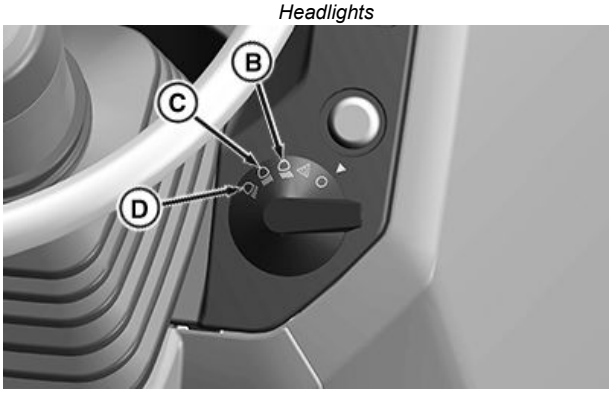

PY39670 —UN—07FEB17

Light Switch Positions

VP27597,0000339 -19-29SEP17-1/1

Using Headlights — Cab

CAUTION: Never use work lights when driving on roads. Dim headlights for oncoming traffic. Bright lights could blind or confuse other drivers.

Dual-beam headlights (A) are used for the highway driving, day, or night. They are turned on in road lights position (B) or field lights position (C) with the light switch.

Dim the headlights by moving high/low beam switch (D) to low beam position when meeting another vehicle.

Keep headlights adjusted properly. (See ADJUST HEADLIGHTS in Maintenance—Electrical System section.)

A—Headlights
B—Road Lights Position
C—Field Lights Position
D—High/Low Beam Switch

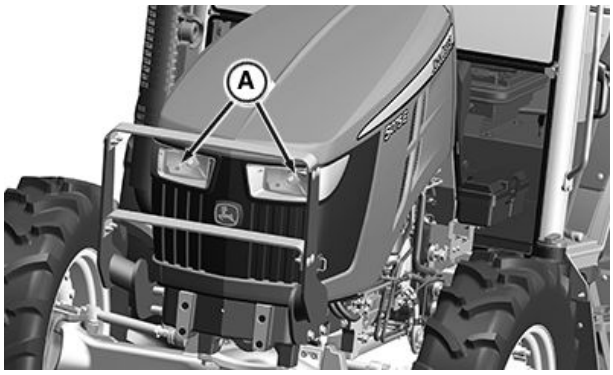

PY39675 —UN—07FEB17

Headlights

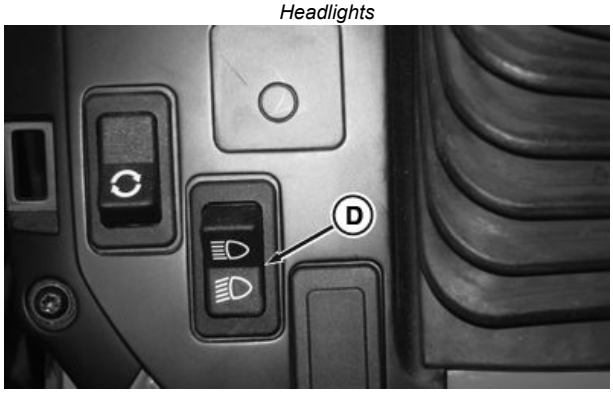

PY14593 —UN—07AUG12

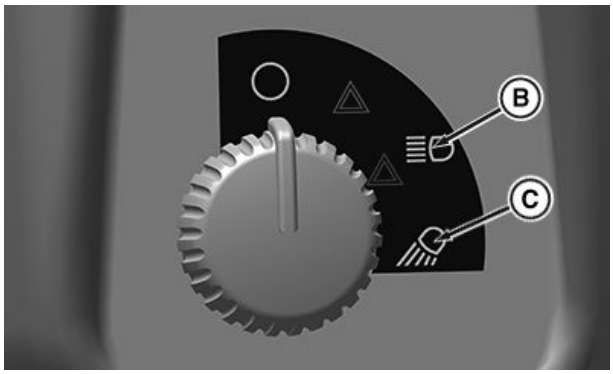

PY40807 —UN—31MAR17

VP27597,000033A -19-30MAR17-1/1

High Beam Indicator

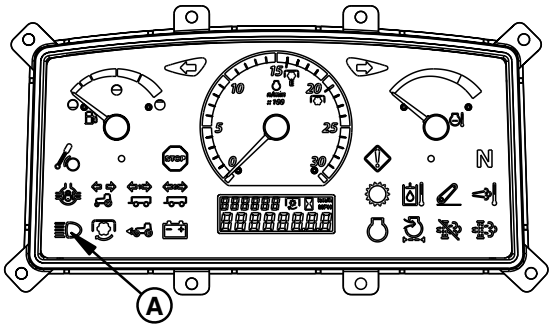

PY39678 —UN—22FEB17

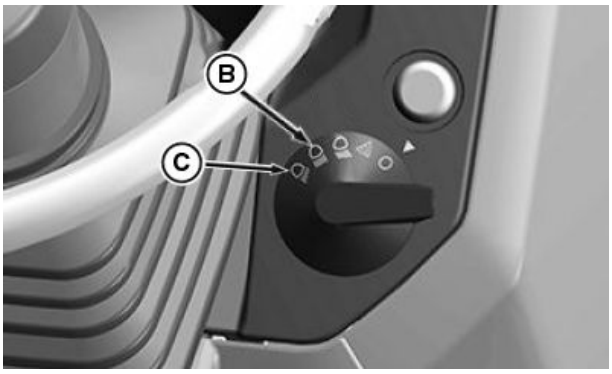

PY41998 —UN—29SEP17

OOS - Tractors Only

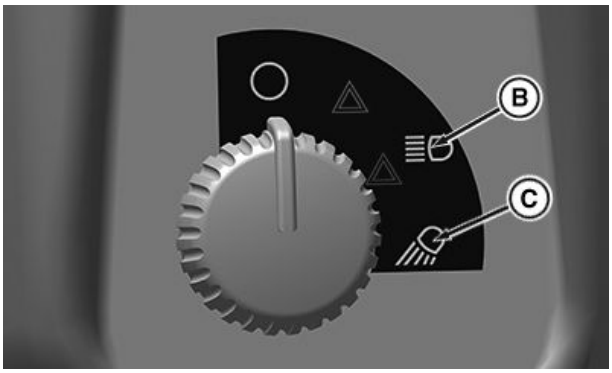

PY40807 —UN—31MAR17

Cab - Tractors Only

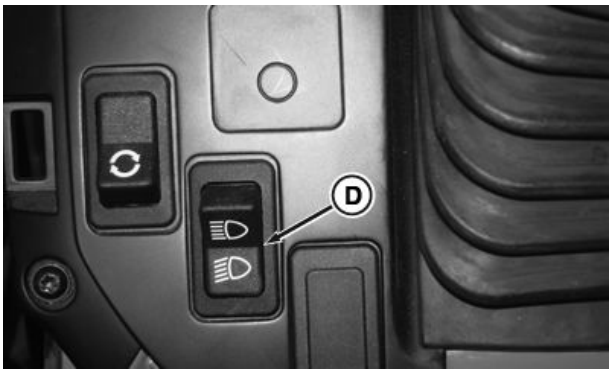

PY14593 —UN—07AUG12

Cab - Tractors Only

A—High Beam Indicator
B—Road Lights Position
C—Field Lights Position
D—High/Low Beam Switch

High beam indicator (A) glows with key in ON or OFF position and light switch in following positions:

For OOS:

- Road lights position (B).
- Field lights position (C).

For Cab:

- Road lights position (B) and high/low beam switch (D) UP.
- Field lights position (C) and high/low beam switch (D) UP.

VP27597,000033B -19-29SEP17-1/1

Using Work Lights — OOS

CAUTION: Rear-facing work lights may blind or confuse driver of other vehicles approaching from behind. When driving or transporting tractor on public roads, use road lights (B) only.

Work lights (A) are for field work only. Do NOT use when driving on public roads. Work lights are on when switch is turned to field light position (C).

A—Work Lights
B—Road Lights Position
C—Field Lights Position

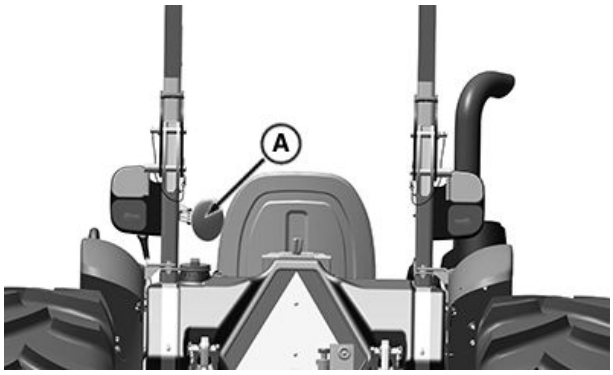

PY39677 —UN—07FEB17

Rear Work Lights — PowrReverser™ Shown

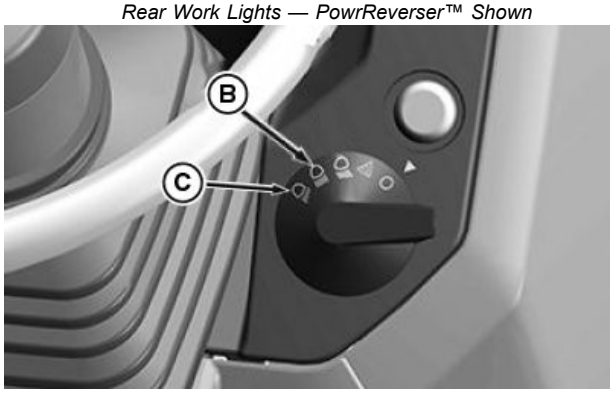

PY41998 —UN—29SEP17

Switch

VP27597,000033C -19-29SEP17-1/1

Using Work Lights — Cab (If Equipped)

CAUTION: When operating on a road, move light switch to road lights position (D) and use switch (E) on either bright or dim headlight positions. Never use work lights when transporting on roads. Clear, bright lights at the rear of the tractor could confuse drivers of other vehicles as they approach from the rear.

NOTE: Rear work lights can be adjusted freely by hand.

Work lights (A) and (B) are for field work only. Do NOT use when driving on public roads. Work lights are on when switch is turned to field light position (C).

A—Front Work Lights
B—Rear Work Lights
C—Field Lights Position
D—Road Lights Position
E—High/Low Beam Switch

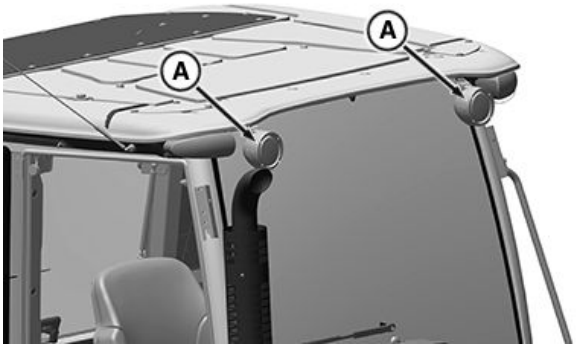

PY39689 —UN—07FEB17

PY18004 —UN—22MAR13

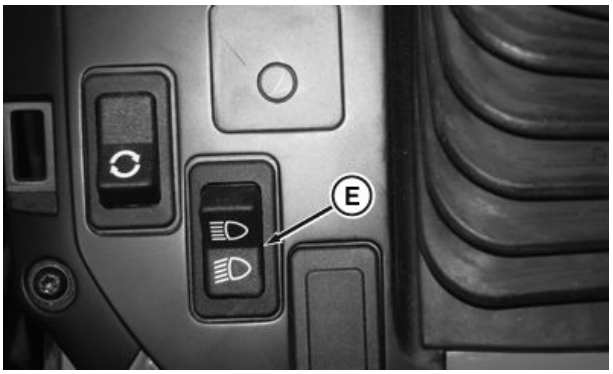

PY14591 —UN—07AUG12

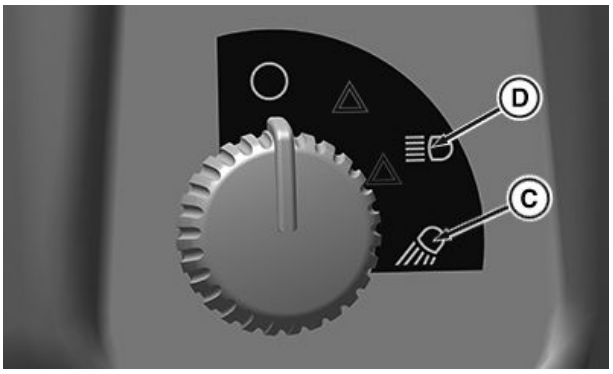

PY40808 —UN—31MAR17

Switch

VP27597,000033D -19-30MAR17-1/1

Using Tail Lights — OOS

Tail lights (A) are switched on when the light switch is turned to either high beam headlight position (D) or low beam headlight position (C).

Be sure that tail light lenses are clean before driving on a road, so other drivers can see them easily.

NOTE: If equipped with canopy, warning lights operate same as lights mounted on ROPS.

A—Tail Lights (Red)
B—Turn Signal Lights (Amber)
C—Low Beam Headlight Position
D—High Beam Headlight Position
E—Field Lights Position

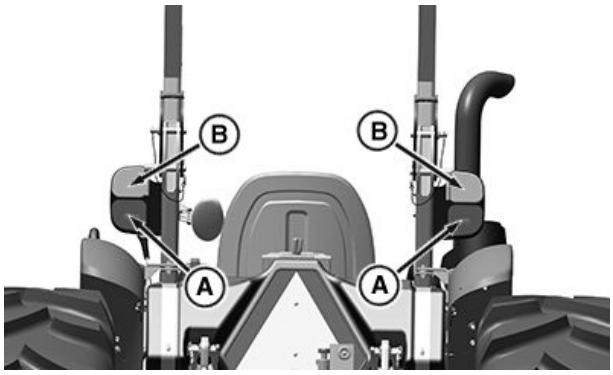

PY39676 —UN—07FEB17

Tail lights

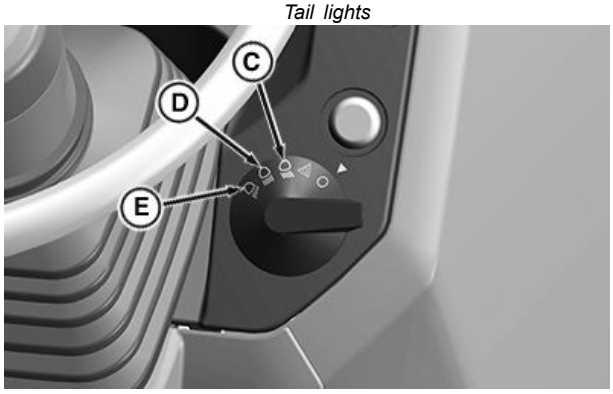

PY39672 —UN—07FEB17

Light Switch

VP27597,000033E -19-29SEP17-1/1

Using Tail Lights — Cab

Tail lights (A) are on when switch is turned to positions (B) or (C).

NOTE: Optional feature : Brake lights are on when key is in run position and service brake is applied.

Be sure tail light lenses are clean before driving on a road, so other drivers can see them easily.

A—Tail Lights (Red)
B—Road Lights Position
C—Field Lights Position

PY18005 —UN—30APR14

Tail Lights — CAB

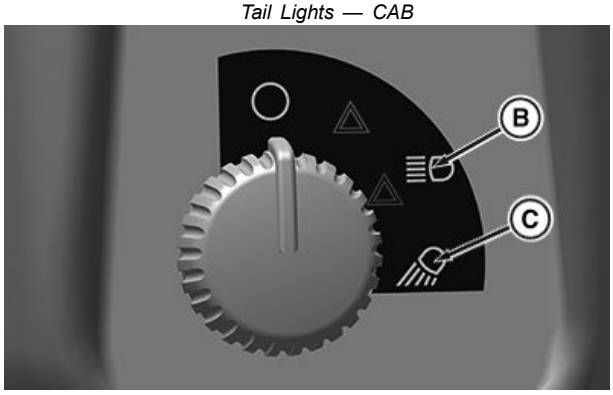

PY40807 —UN—31MAR17

Switch

VP27597,000033F -19-30MAR17-1/1

Using Turn Signals

PY39685 —UN—07FEB17

Turn Signal Knob (OOS)

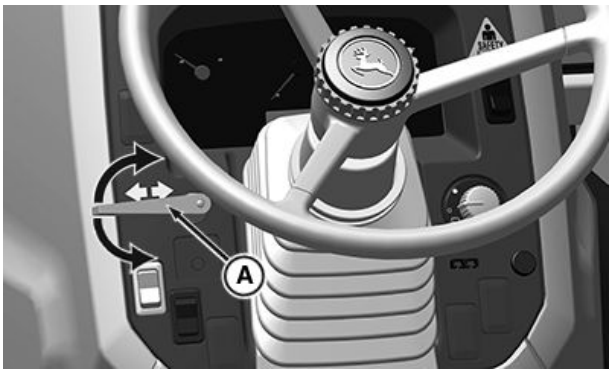

PY39684 —UN—07FEB17

Turn Signal Knob (Cab)

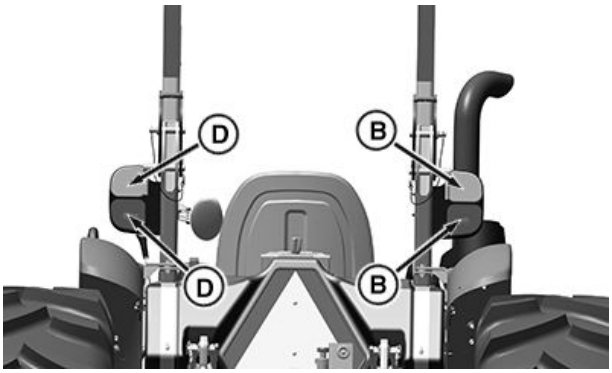

PY39682 —UN—22FEB17

OOS Shown

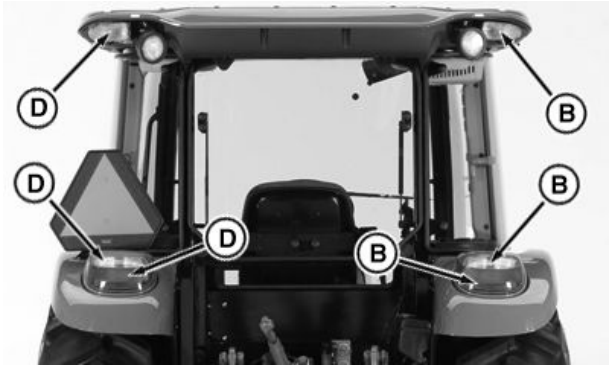

PY18245 —UN—08JUL13

Cab Shown

Turn signal knob/Lever (A) position indications:

- Up or Down—For Cab tractors.
- Right or Left—For OOS Tractors.

Move the turn signal knob/lever (A) to the down/left to indicate left-hand turn and up/right for right-hand turn. Indicator lights (C) flash to signal turn direction.

When knob/lever is up/right position, front and rear facing lights on the right-hand side (B) flash while left-hand lights (D) glow steady. Left-hand lights flash and right-hand lights glow steady when knob/lever is at down/left position.

NOTE: Manually return the lever to the center position after turning.

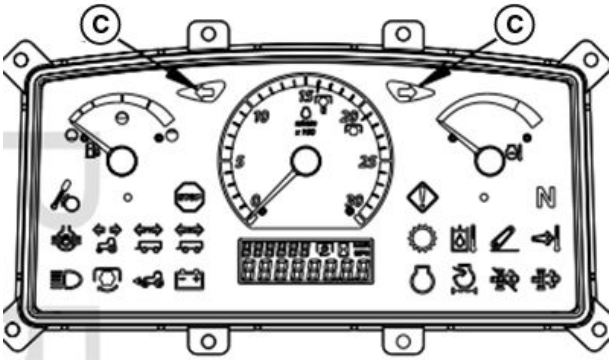

PY42000 —UN—29SEP17

A—Turn Signal Knob/Lever
B—Right-Hand Lights
C—Turn Indicator Lights
D—Left-Hand Lights

VP27597,0000340 -19-29SEP17-1/1

Using Warning Lights — OOS

CAUTION: Prevent collisions between the other road users, slow moving tractors with attachments or towed equipment, and self-propelled machines on public roads. Frequently check for traffic from the rear, especially in turns, and use hand signals or turn signal lights.

Use headlights, flashing warning lights, and turn signals day and night. Follow local regulations for the equipment lighting and marking. Keep lighting and marking visible and in good working order. Replace or repair lighting and marking that has been damaged or lost. An implement safety lighting kit is available from your John Deere dealer.

Warning lights (A) are switched on in either warning light (B), full-beam headlight (C), or low-beam headlight (D) light switch position.

A—Warning Lights
B—Warning Light Switch Position
C—Full-Beam Headlight Switch Position
D—Low-Beam Headlight Switch Position

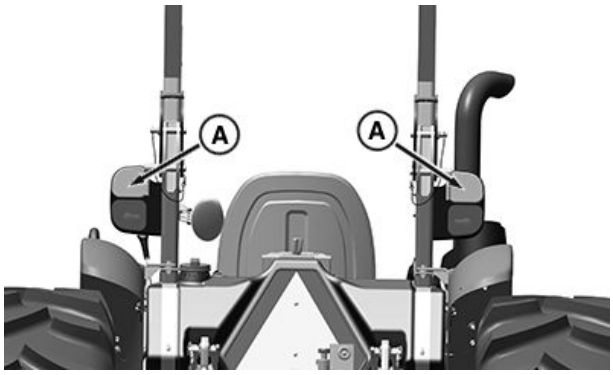

PY39683 —UN—22FEB17

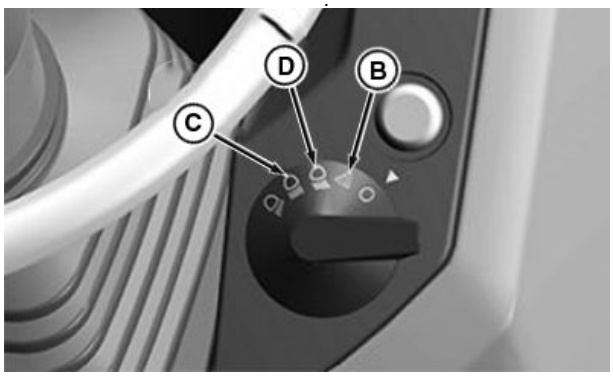

PY41999 —UN—29SEP17

VP27597,0000341 -19-29SEP17-1/1

Using Warning Lights — Cab

CAUTION: Prevent collisions between other the road users, slow moving tractors with attachments or towed equipment, and self-propelled machines on public roads. Frequently check for traffic from the rear, especially in turns, and use hand signals or turn signal lights.

Use headlights, warning lights, and turn signals day and night. Follow local regulations for the equipment lighting and marking. Keep lighting and marking visible and in good working order. Replace or repair lighting and marking that has been damaged or lost. An implement safety lighting kit is available from your John Deere dealer.

Warning lights (A and B) flash when switch is turned to warning light position (C). They also flash when the switch is in road lights position (D).

A—Front Warning Lights
B—Rear Warning Lights
C—Warning Lights Position
D—Road Lights Position

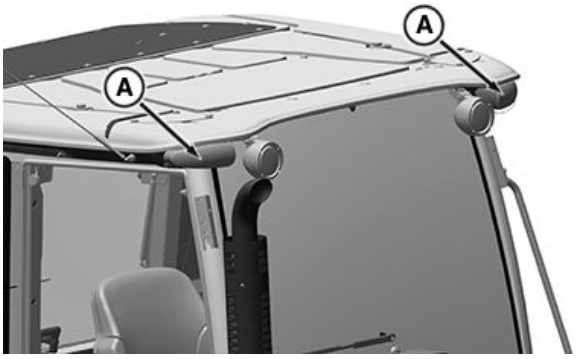

PY39686 —UN—07FEB17

PY18008 —UN—22AUG13

PY18006 —UN—22MAR13

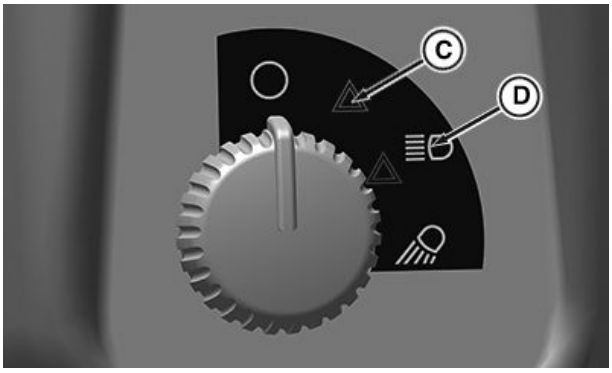

PY40809 —UN—31MAR17

Switch

VP27597,0000342 -19-30MAR17-1/1

Using Seven-Terminal Outlet

Outlet (A) is used to connect lights, turn signals, and remote electrical equipment on trailers or implements. Always use auxiliary light on towed implement when tractor rear signals and other lights are obscured.

NOTE: Matching plug is available through your John Deere dealer.

Terminal	Function	Wire Color
1	Ground	Black
2	Work Lamp	Purple
3	Left Turn	Dark Green
4	Reserved/Brake Light	Red
5	Right Turn	Dark Green
6	Tail Lamp	Gray
7	Accessory	Red

A—Seven-Terminal Outlet

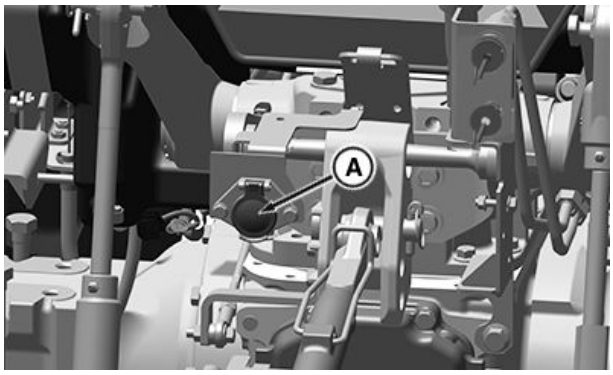

PY39687 —UN—13JUL17

Seven-Terminal Outlet (OOS - Tractors)

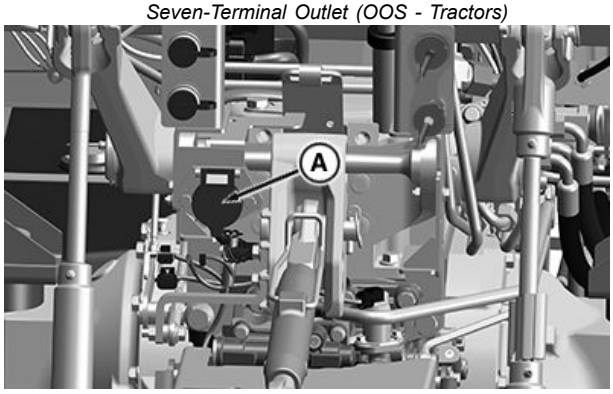

PY39688 —UN—13JUL17

Seven-Terminal Outlet (Cab - Tractors)

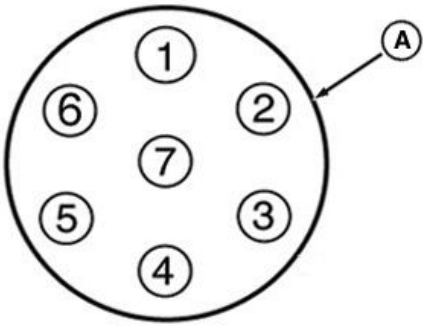

PY16094 —UN—20JUN12

VP27597,0000343 -19-07FEB17-1/1

Operating Rotating Beacon Light — (If Equipped)

Depress switch (B) to activate light (A).

To remove light for storage or clearance:

1. Loosen wing nut and lift light from tube.
2. Install cap on tube end to protect light socket.

A—Light **B—Switch**

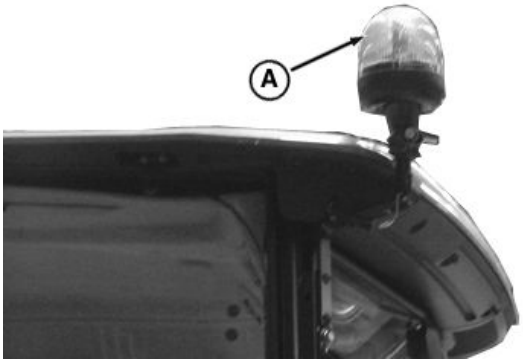

PY16095 —UN—22JUN12

PY16096 —UN—22JUN12

Right-Hand Post

VP27597,0000344 -19-30MAR17-1/1

Operate Foldable ROPS

CAUTION: Make certain all parts are installed correctly if roll-over protective structure (ROPS) is loosened or removed for any reason. Tighten mounting bolts to proper torque.

The protection offered by ROPS is impaired if ROPS is subjected to structural damage, as in an overturn incident, or is in anyway altered by welding, bending, drilling, or cutting. A damaged ROPS must be replaced, not reused. Any alteration to the ROPS must be approved by the manufacturer.

Always keep upper part of ROPS pinned in vertical position (as pictured) when operating tractor. If tractor is operated with ROPS folded (for example, to enter a low building) drive with extreme caution and DO NOT use seat belt.

Fold the ROPS up again as soon as the tractor is operated under normal conditions.

To Lower ROPS Crossbar (A):

1. Remove quick-lock pins (B) and headed pins (C) on both sides of ROPS.
2. Lower crossbar (A) of ROPS onto stops.
3. Reinstall pins (C and B) into holes in ROPS to lock crossbar down.

To Put ROPS in Operating Position:

1. Lift crossbar (A) of ROPS to position shown.
2. Reinstall pins (C and B) into bottom holes in ROPS to lock in position.

A—ROPS Crossbar
B—Quick-Lock Pins
C—Headed Pins

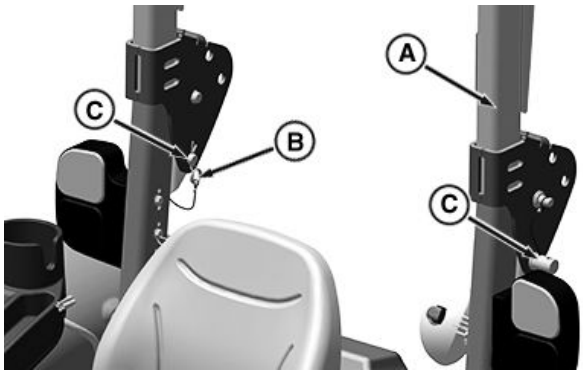

PY39637 —UN—30JAN17

ROPS—Operating Position

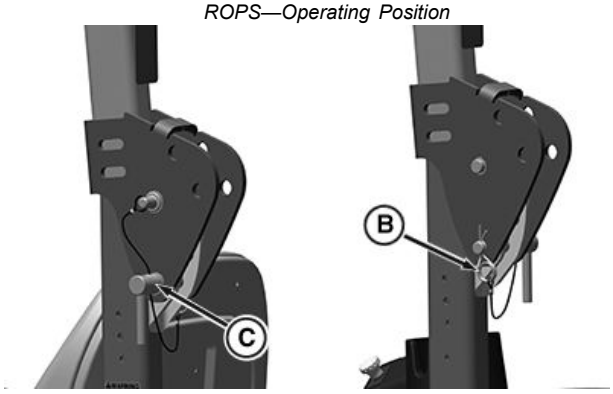

PY39638 —UN—30JAN17

Reinstall Pins

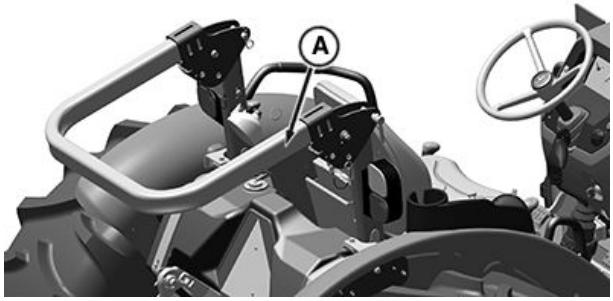

PY39639 —UN—30JAN17

ROPS—Folded

VP27597,0000329 -19-30JAN17-1/1

Using Seat Belt

CAUTION: Use a seat belt when you operate with a roll-over protective structure (ROPS) to minimize chance of injury from an accident such as an overturn. DO NOT use seat belt when ROPS is folded down.

To properly retain operator, seat belt (A) must fit snugly across abdomen. Seat belt extends as necessary to fit comfortably.

Inspect seat belt and mounting hardware annually. (See INSPECT SEAT BELTS in General Maintenance and Inspection section.)

PY39631 —UN—30JAN17

Seat Belt

A—Seat Belt

VP27597,0000323 -19-30JAN17-1/1

Select Seat Position

There are two seat adjustments available:

Move lever (B) and slide seat closer to or away from the dash panel and controls.

To raise or lower seat: Use a wrench to adjust cap screws (A) to desired seat height.

A—Seat Adjustment Cap Screws—Lower or Raise

B—Seat Adjustment Lever—Fore or Aft

PY39632 —UN—30JAN17

Standard Seat

VP27597,0000324 -19-30JAN17-1/1

Adjusting Steering Wheel — (If Equipped)

Tilt: Lift lever (A) and move steering column to the desired angle. Release lever to lock into the position.

A—Angle Adjustment Lever

PY39633 —UN—28MAR17

Steering Column

VP27597,0000325 -19-28MAR17-1/1

Adjusting Ride Comfort

Adjustment knob is located behind seat.

Weight markings are given on the rear of seat. Turn adjustment knob (A) for a firm or soft ride. Weight markings on the rear of seat are suggested adjustment settings where the seat suspension functions properly relative to operator's weight.

A—Adjustment Knob

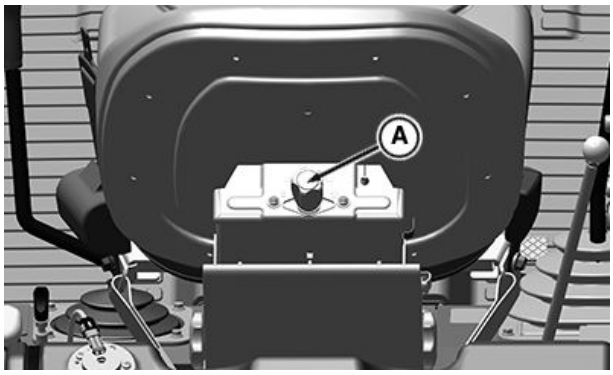

PY39635 —UN—30JAN17

Weight adjustment knob

VP27597,0000326 -19-30JAN17-1/1

Using Operator's Manual Holder

Store operator's manual in the OM holder (A) which is located exactly behind the operator seat.

A—OM Holder

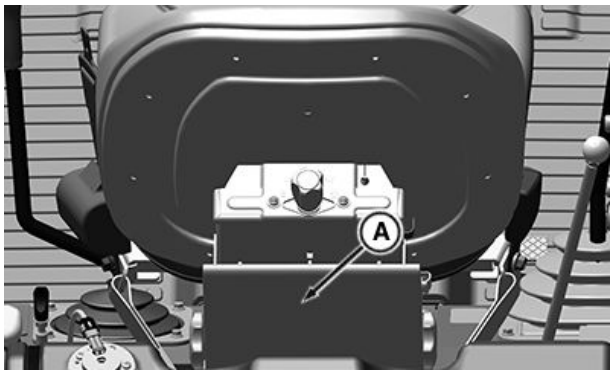

PY39636 —UN—28MAR17

VP27597,0000327 -19-30MAR17-1/1

Use Tool Box

IMPORTANT: The tool box is not intended to carry heavy objects or to be used as a seat.

The tractor is equipped with a portable tool box (A). It is fitted near the left side rail. Pull the latch upward to open the tool box.

For safety reasons, never drive the tractor with the tool box open. Content weights of the tool box not exceed more than 10 kg (22 lb).

A—Tool Box

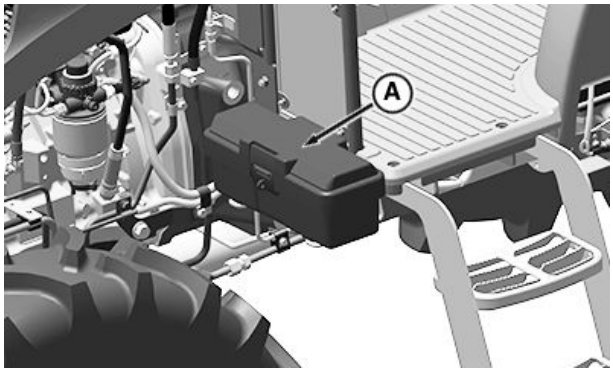

PY39634 —UN—30JAN17

Tool Box

VP27597,0000328 -19-30JAN17-1/1

Using Seat Belt

CAUTION: Use a seat belt when you operate with a roll-over protective structure (ROPS) to minimize chance of injury from an accident such as an overturn.

To properly retain operator, seat belt (A) must fit snugly across abdomen. Seat belt extends as necessary to fit comfortably.

Inspect seat belt and mounting hardware annually. (See INSPECT SEAT BELTS in General Maintenance and Inspection section.)

A—Seat Belt

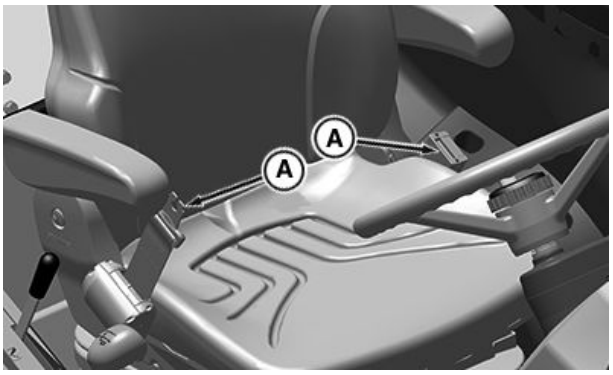

Seat Belt

PY39615 —UN—27JAN17

VP27597,0000318 -19-27JAN17-1/1

Adjusting Seat

CAUTION: To avoid accidents, adjust the seat before driving.

Forward or Backward: Lift lever (A), move seat to desired position and release lever to lock in position.

Weight: Rotate lever (C) away from seat and turn:

- Clockwise—Increase load
- Counterclockwise—Reduce load

NOTE: Suspension should not bottom out when properly adjusted.

For desired weight setting rotate the weight adjustment lever (C).

Lift lever (B), to adjust seat backrest angle to desired position and release lever to lock in position.

A—Forward/Backward Adjustment Lever
B—Backrest Angle Adjustment
C—Weight Adjustment Lever
D—Weight Indicator

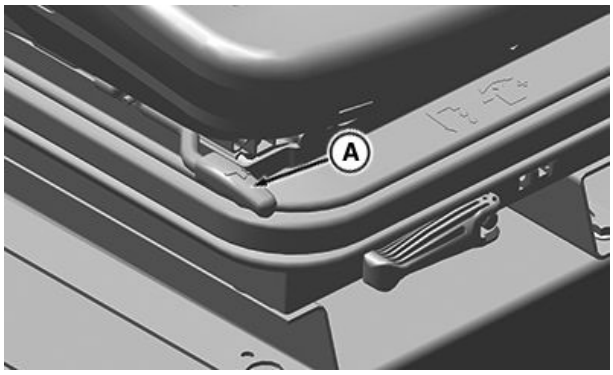

PY39625 —UN—27JAN17

Fore/Aft Adjustment

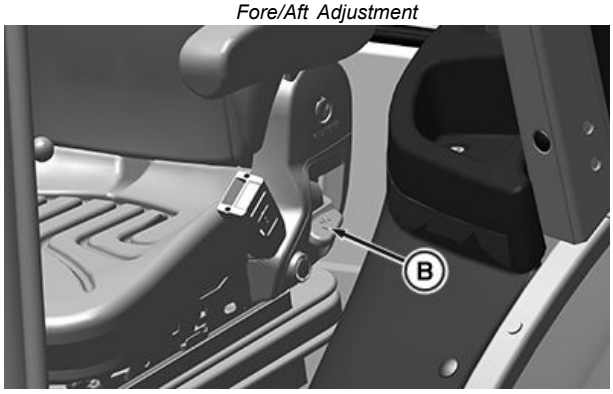

PY39626 —UN—27JAN17

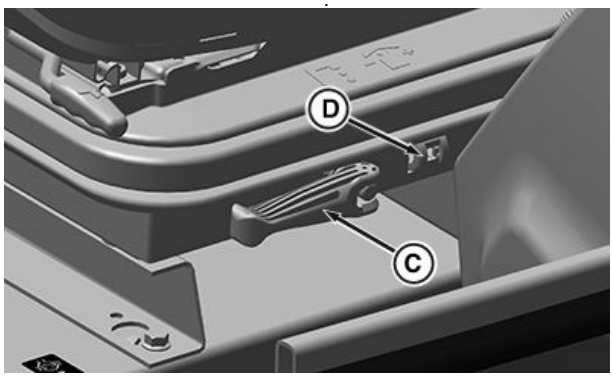

PY39628 —UN—27JAN17

VP27597,0000322 -19-31MAR17-1/1

Adjusting Steering Wheel

Tilt: Lift lever (B) and move steering column to the desired angle. Release lever to lock into position.

Wheel Height (Telescoping): Loosen ring (A) and raise or lower steering wheel to desired height. Tighten ring to lock into position.

A—Height Adjustment Ring
B—Angle Adjustment Lever

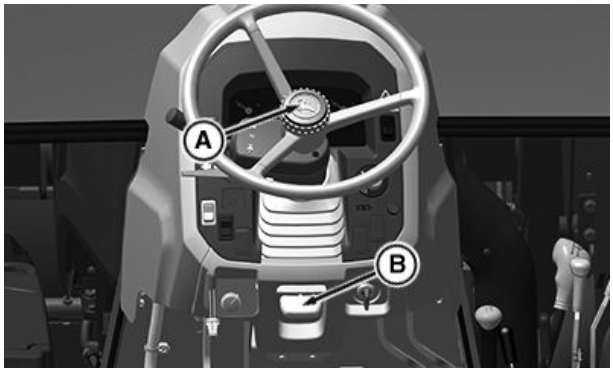

PY39616 —UN—27JAN17

Steering Column

VP27597,0000319 -19-31MAR17-1/1

Accessory Electrical Outlets

NOTE: Outlet is protected by 30 amp fuses.

A—12 Volt Power Outlet

PY40814 —UN—31MAR17

Right-Hand Panel

VP27597,000031A -19-31MAR17-1/1

Use Tool Box

IMPORTANT: The tool box is not intended to carry heavy objects or to be used as a seat.

The tractor is equipped with a portable tool box (A). It is fitted near the right side rail. Pull the latch upward to open the tool box.

For safety reasons, never drive the tractor with the tool box open. The content of the tool box should not exceed 10 kg (22 lb).

A—Tool Box

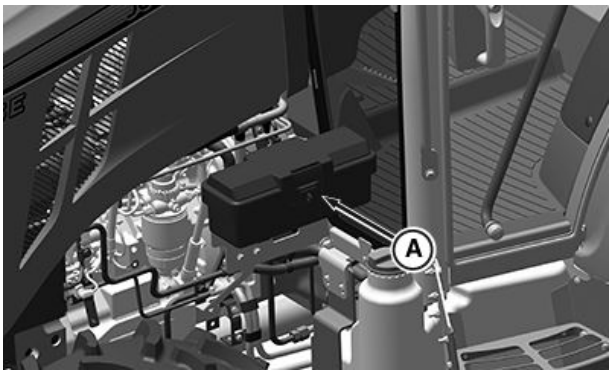

PY39617 —UN—27JAN17

Tool Box

VP27597,000031B -19-27JAN17-1/1

Opening Windows

Side and rear windows can be opened for better ventilation.

Side: Pull handle (A) toward rear and push to lock open.

Rear: Rotate handle (B) clockwise and push out.

NOTE: Rear window opening provides a large exit path if cab doors are blocked in case of an emergency.

A—Side window handle **B—Rear window handle**

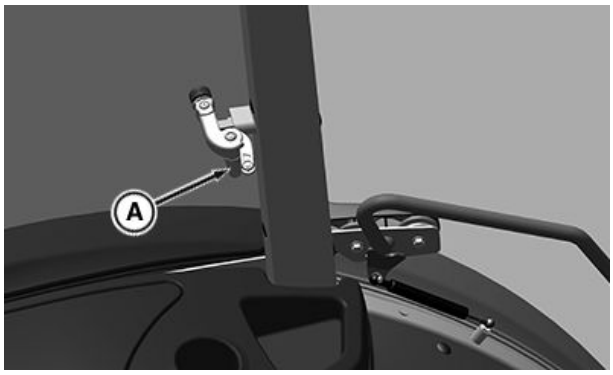

PY39620 —UN—27JAN17

Left-Side Window

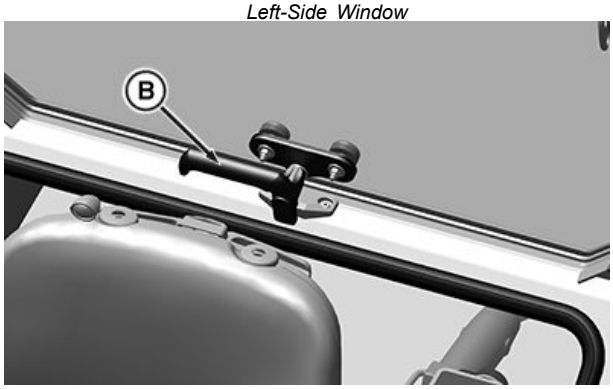

PY39621 —UN—27JAN17

Rear Window

VP27597,000031C -19-27JAN17-1/1

Opening Door

Pull handle (A) from inside of cab and push door.

Press knob (B) from outside of cab and pull door.

A—Handle **B—Knob**

PY39619 —UN—27JAN17

Inside Door Latch

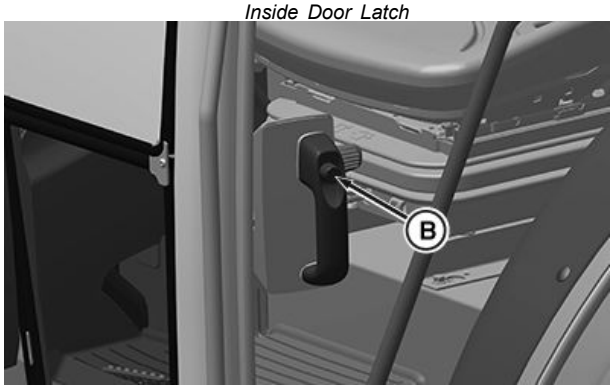

PY39618 —UN—27JAN17

Outside Door Handle

VP27597,000031D -19-27JAN17-1/1

Emergency Exit

CAUTION: Make sure no one is near the emergency exit. Panel falls out when retaining pin (A) is removed.

NOTE: Option not available in North America.

Remove retaining pin (A) and push the right-hand glass panel.

A—Retaining Pin

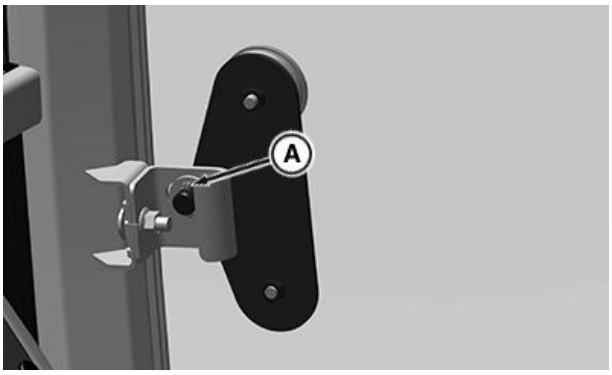

PY39622 —UN—27JAN17

Right-Hand Side Panel

VP27597,000031E -19-27JAN17-1/1

Inside Rear View Mirror and Sun Visor

A—Inside Rear View Mirror **B—Sun Visor**

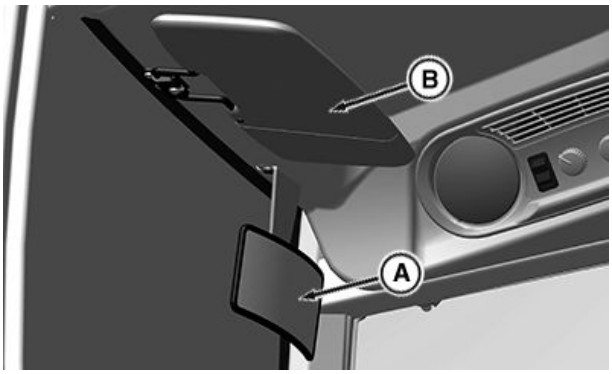

PY39623 —UN—27JAN17

Mirror and Sun Visor

VP27597,000031F -19-27JAN17-1/1

Adjusting Blower Speed

Turn control knob (A) to desired setting. For rapid cab cool down, use the purge setting (F).

A—Blower Speed Control Knob
B—Off
C—Low
D—Medium
E—High
F—Purge

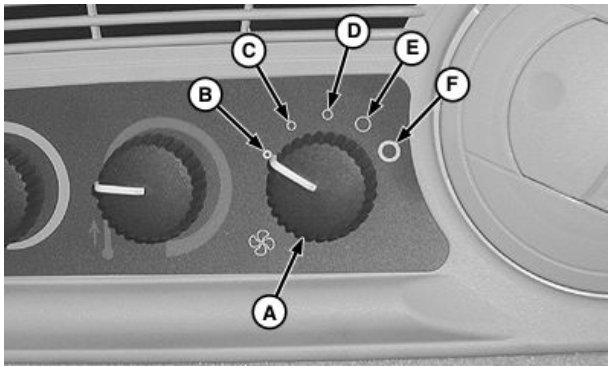

LV8414 —UN—14JUL03

SD74272,00001EB -19-22JUN12-1/1

Controlling Temperature

Push top half of switch (A) to turn air conditioning and deicing ON and push bottom half to turn it OFF.

Turn control knob (B) to adjust air conditioning temperature.

Turn control knob (C) to adjust heater temperature.

A—Air Conditioning and Deicing Switch
B—Air Conditioning Temperature Control Knob
C—Heater Temperature Control Knob
D—Blower Speed Control Knob

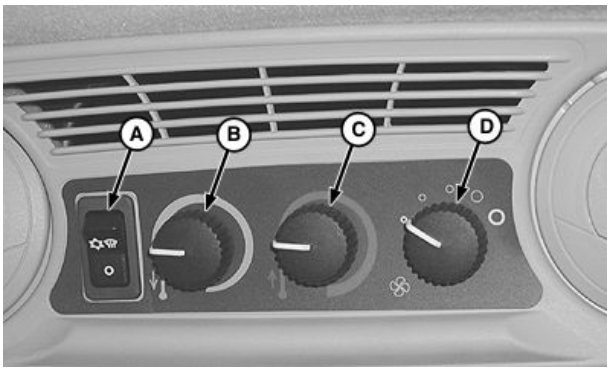

LV8415 —UN—14JUL03

VP27597,0000332 -19-02FEB17-1/1

Deicing, Demisting or Defrosting Windshield

1. Aim two front vents (A) toward windshield.

NOTE: Closing middle and rear vents will help clear windshield faster.

2. Press top half of deicing switch (B) and turn A/C temperature control knob (C) to full counterclockwise position.
3. Turn heater temperature control knob (D) clockwise to obtain desired temperature.

A—Front Vent
B—Deicing Switch
C—A/C Temperature Control Knob
D—Heater Temperature Control Knob

LV8596 —UN—14AUG03

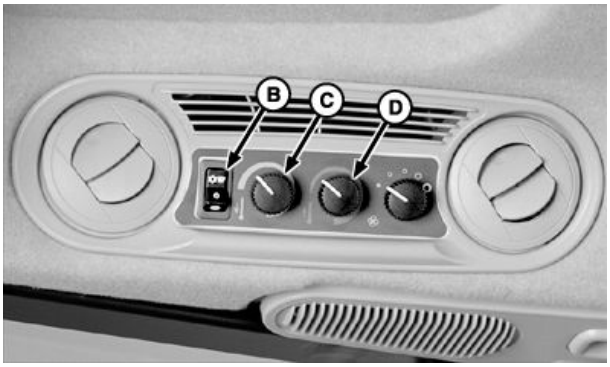

LV10324 —UN—21SEP04

SD74272,00001ED -19-22JUN12-1/1

Optimizing A/C and Heater Performance

Adjust individual vents to target heating or cooling:

- Position front vents (A) toward legs and mid-body.
- Position middle vents (B) toward your head.
- Position rear vents (C) toward your back.

NOTE: For maximum cooling effect, turn heater temperature control knob (D) to full counterclockwise position.

Position all vents (A, B, and C) down to heat the floor and feet.

A—Front Vent
B—Middle Vent
C—Rear Vent
D—Heater Temperature Control Knob

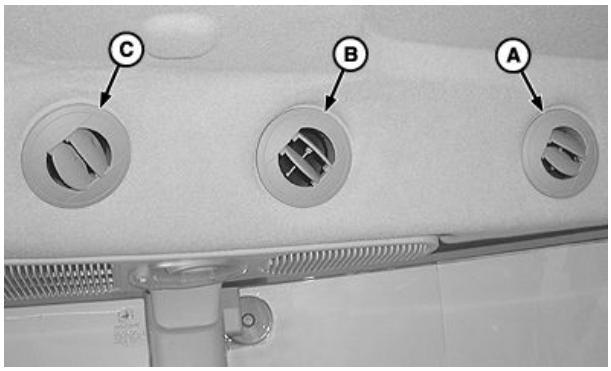

LV10325 —UN—21SEP04

LV10326 —UN—21SEP04

SD74272,00001EE -19-22JUN12-1/1

Operating Windshield Wiper and Washer

Rotate wiper switch (A) to move windshield wipers to OFF or ON position.

Push switch to activate windshield washer.

Fill reservoir (B) with non-freezing windshield washer fluid. Reservoir is located behind cab on inside of right rear fender.

A—Windshield Wiper/Washer Switch
B—Washer Fluid Reservoir

PY39629 —UN—30MAR17

Windshield Wiper Switch

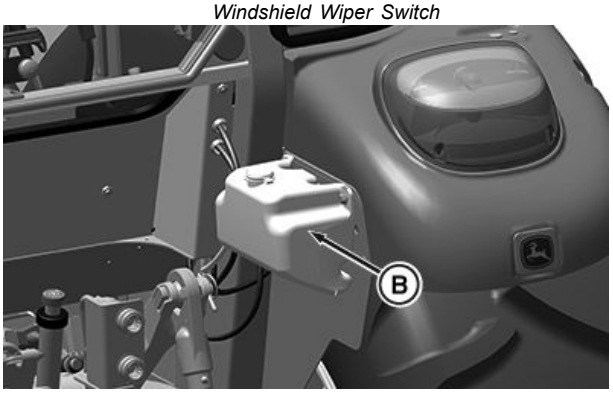

PY39630 —UN—27JAN17

Rear, Right-Hand Side

VP27597,0000313 -19-27JAN17-1/1

Routing Cables and Harnesses

Rear window frame of cab has two openings, allowing cables/harnesses to be routed. Open the window and remove rubber plugs (A). Cut rubber plugs at the incisions provided, to allow cables/harnesses to be routed through the plugs. Connect the cable/harness ends, insert rubber plugs and close the window.

A—Rubber Plugs

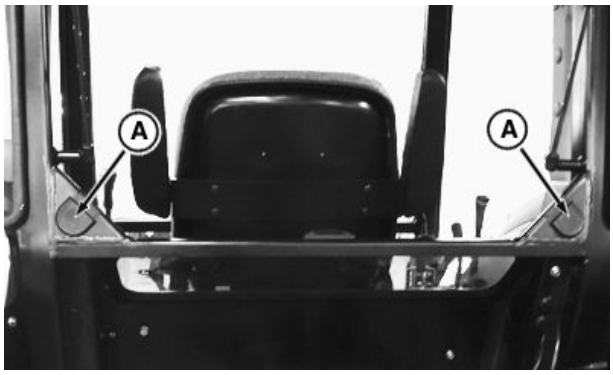

PY18011 —UN—22MAR13

Outside of Cab

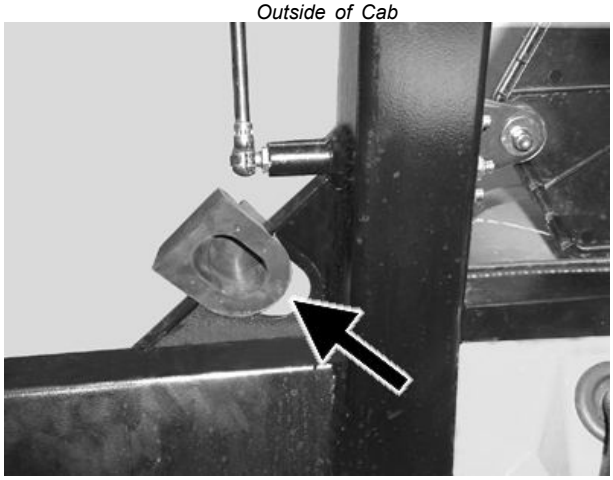

P12682 —UN—24NOV03

Inside of Cab

VP27597,0000314 -19-27JAN17-1/1

Operating Radio (If Equipped)

1. Press BAND (A) to select FM1, FM2, AM, SAT, or WX (Weather).
2. Press TUNE (F) once to turn to the next higher station. Press SEEK (G) once to turn to the next lower station.
3. Press and hold both TUNE (F) and BAND (A) to switch between manual tune mode and “seek” mode.
4. Holding SEEK longer than half a second begins the “seek” function. When a station with a strong enough signal is found, “seek” function will stop at that station.
5. Press SCAN (B) to scan all stations. When a strong enough signal is found, the station will play for 5 seconds then continue to scan until SCAN is pressed again.
6. Adjust volume, bass, treble, fade, and balance by pressing and releasing ON/AUDIO knob (I) repeatedly until desired function appears on display. Rotate ON/AUDIO knob for adjustment.
7. Adjust brightness of display by pressing (D) until “DIM” appears on display. Rotate ON/AUDIO knob to adjust.

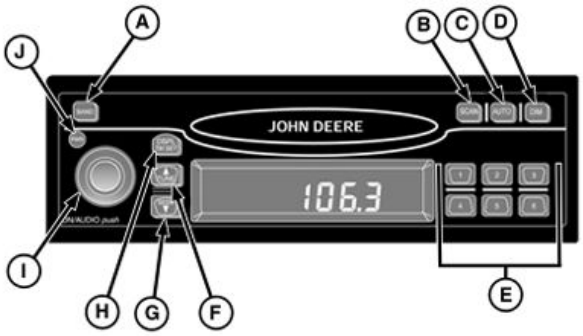

LV12461 —UN—12APR05

A—Band
B—Scan
C—Auto Preset
D—Dim
E—Preset Stations
F—Tune
G—Seek
H—Display/Time Set
I— On/Audio/Volume
J—Power

SD74272,0000448 -19-18DEC12-1/1

Setting Clock (If Equipped)

1. Switch ignition to ON position.
2. Press and hold DSPL/TM SET (A) button until the “hours” digits flash.
3. Press SEEK (B) or TUNE (C) to set the correct hour.
4. Press and hold DSPL/TM SET until the “minutes” digits flash.
5. Press SEEK or TUNE to set correct minute. The seconds are reset to zero when minute setting is changed.

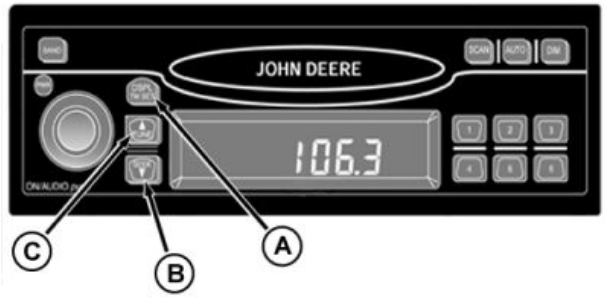

RW26907 —UN—05APR00

A—DSPL/TM SET
B—SEEK
C—TUNE

AI68620,0000206 -19-03SEP10-1/1

Operating Cassette Tape or Compact Disc Player—If Equipped

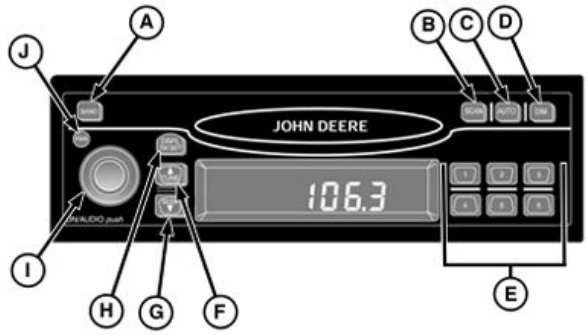

LV12461 —UN—12APR05

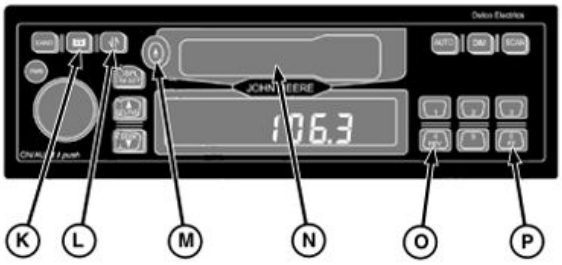

LV12462 —UN—12APR05

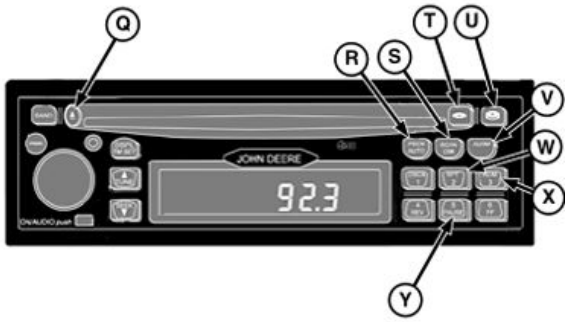

LV12463 —UN—12APR05

A—Band
B—Scan
C—Auto Preset
D—Dim
E—Preset Stations
F—Tune
G—Seek
H—Display/Time Set
I— On/Audio/Volume
J— Power
K—Tape
L—Tape Reverse
M—Eject Tape
N—Tape Slot
O—Rewind Tape
P—Fast Forward Tape
Q—Eject CD
R—Pre-Scan/Auto
S—Scan/Dim
T—CD Mode
U—CD Changer Mode
V—Alarm
W—CD Repeat
X—CD Random
Y—CD Pause

Operating cassette tape player

1. Turn receiver ON.
2. Insert cassette into slot (N). If radio is playing, press (K) to play the cassette.
3. Press (L) to play the opposite side of the tape.
4. Press (O) to rewind.
5. Press (P) to fast forward.
6. Press (M) to eject tape.
7. If receiver detects a defective cassette, “BAD TAPE” will appear on the display and the tape will be ejected.

Operating compact disc player

1. Turn ignition and receiver ON.
2. Insert compact disc into slot, label side up.
3. Press (F) to forward to the next track. Press (G) to reverse to the beginning of the track.
4. Press (W) to repeat the current track. Press (X) for random track selection.
5. Press and hold (O) to fast reverse. Release to play at normal speed.
6. Press (Y) to pause the CD. Press (Y) again to resume play.
7. Press and hold (P) to fast forward. Release button to play at normal speed.
8. Press (Q) to eject CD.
9. Press (S) to advance to the next track on the CD. The CD will play 10 seconds of that track and then play each successive track for 10 seconds. Press again to cancel.

AI68620,0000207 -19-03SEP10-1/1

Using Dome Light

Dome light switch (A) has three positions:

- ON turns the dome light on.
- Dome light comes on when left-hand door is opened and off when left-hand door is closed.
- OFF turns the dome light off.

IMPORTANT: Before exiting cab, turn dome light to OFF or DOOR position to avoid causing battery to lose its charge.

A—Dome Light Switch

LV8418 —UN—14JUL03

VP27597,0000315 -19-27JAN17-1/1

Using Courtesy Light

Courtesy light (A) is on when light switch is in the following positions:

- Triangle (Warning)
- Position 1 (Road Lights)
- Position 2 (Field Lights)

A—Courtesy Light

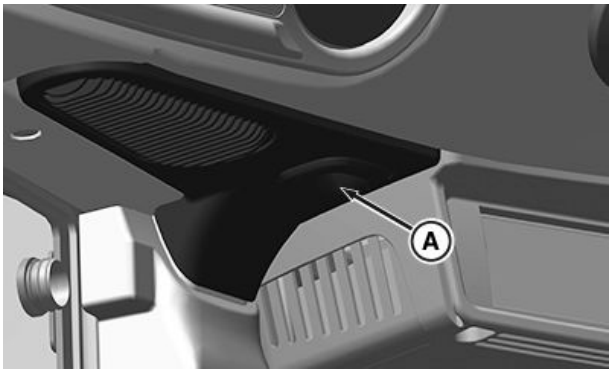

Light Right-Hand Control Panel

PY39627 —UN—27JAN17

VP27597,0000321 -19-27JAN17-1/1

Using Monitor Mounts

There is one location to attach monitors and controls in the cab:

- Right center post (remove plugs [B]).

A—Plugs (Mounting Locations)

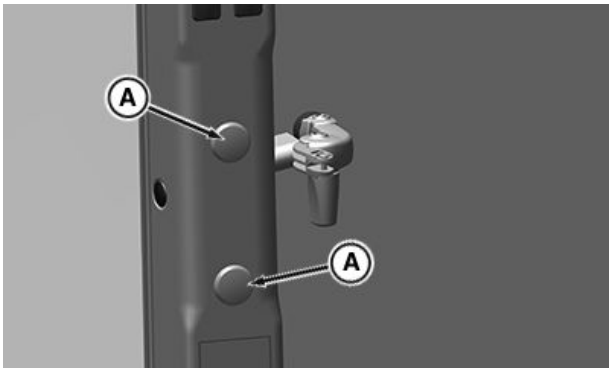

Right-Hand Side of Cab

PY39624 —UN—27JAN17

VP27597,0000320 -19-27JAN17-1/1

Engine Operation—*Break-In Check*

IMPORTANT: The engine is ready for normal operation. However, extra care during the initial break-in period results in more satisfactory long-term engine performance and life. During the initial operation of a new engine, change the oil and filter between a minimum of 100 hours and a maximum equal to the specified John Deere Plus-50 or John Deere Plus-50 II engine oil.

1. Warm up engine at slow rpm. Check coolant temperature gauge (A), engine information (B), and charging (C) warning indicators.
2. **Operate the engine at heavy loads with minimal idling during the break-in period.**
   During the first 20 hours, avoid prolonged periods of engine idling or sustained maximum load operation. If engine idles longer that 5 minutes, stop the engine.
3. Check engine oil, coolant, transmission/hydraulic, and mechanical front wheel drive (if equipped) fluid levels frequently. Watch for fluid leaks.

NOTE: Some increase in oil consumption is expected when low viscosity oils are used. Check oil levels more frequently.

If air temperature is below -10°C (14°F), use an engine block heater.

IMPORTANT: This engine is factory-filled with John Deere ENGINE Break-In Oil.

If the engine has significant operating time at idle, constant speeds, and/or light load usage, or makeup oil is required in the first 100 hour period, a longer break-in period is required. In these situations, an additional 100 hours break-in period is recommended, using a new change of John Deere Engine Break-In Oil and a new John Deere oil filter.

Check engine oil level more frequently during the engine break-in period.

Do not add make-up oil until the oil level is BELOW the ADD mark on dipstick. If make-up oil is required during the break-in period, John Deere Engine Break-In Plus oil is used whenever possible.

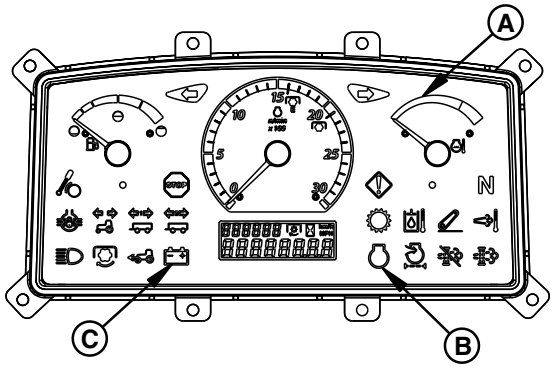

Instrument Display - OOS

A—Coolant Temperature Gauge
B—Engine Information Indicator
C—Charging Indicator

MD36154,00001C6 -19-06APR17-1/2

DO NOT fill above the crosshatch pattern (A) or the FULL mark, whichever is present. Oil levels anywhere within the crosshatch are considered in the acceptable operating range.

Break-In Plus can be changed any time between 100 and 500 hours. (See CHANGING ENGINE OIL AND REPLACING FILTER in Lubrication and Maintenance Section.)

A—Crosshatch Pattern

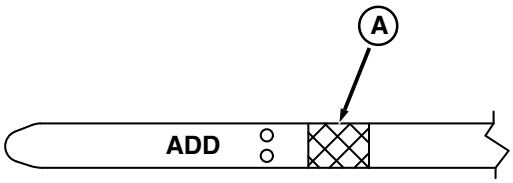

Dipstick Crosshatch Pattern

MD36154,00001C6 -19-06APR17-2/2

Break-In Service

IMPORTANT: Keep wheel hardware tight to avoid tractor damage. Check wheel hardware torque before operating, twice during first ten hours of operation, after fifty hours of operation, and periodically thereafter.

During the First 10 Hours of Operation:

Perform daily or 10 hours service. (See Maintenance and Service Intervals section.)

Tighten wheel hardware. (See Wheels, Tires, and Treads section.)

After the First 50 Hours of Operation:

Tighten wheel hardware. (See Wheels, Tires, and Treads section.)

Check alternator/fan belt tension and tighten air intake and cooling system hose clamps.

After the First 100 Hours of Operation:

Replace transmission-hydraulic filter element.

Change engine oil and filter[1].

[1] *See Engine Break-In Oil in Service section for additional information.*

SD74272,0000305 -19-25JUL12-1/1

Daily Service Before Starting Engine (OOS and Cab)

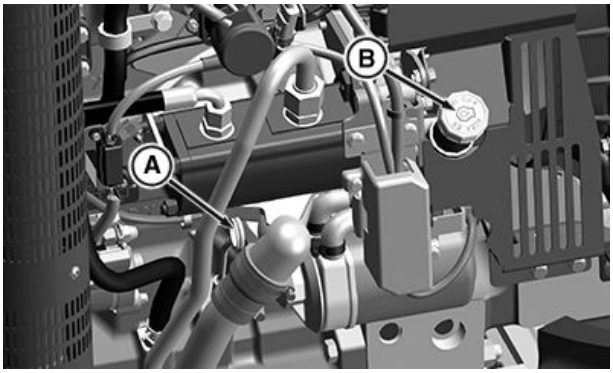

PY40220 —UN—14FEB17

For Cab Tractors

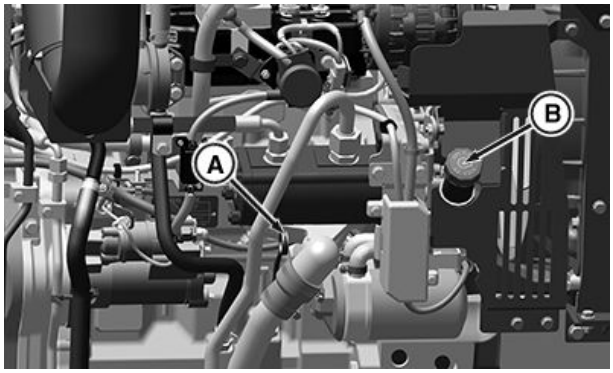

PY40219 —UN—28MAR17

For OOS Tractors

NOTE: Park tractor on level ground before executing checks.

1. Check engine oil level. Clean dipstick (A) and reinsert fully. Withdraw it again and check oil level. The window for safe operation of engine is when the oil level is between the upper and lower marks of the dipstick.

   Do not operate the engine if oil level is below the minimum mark. In this case, add recommended oil. (See “Fuels, Lubricants, Coolant” section.)

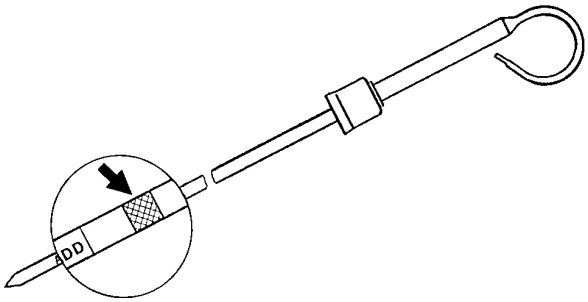

PY6494 —UN—09MAY07

A—Dipstick **B—Oil Filler Port**

VP27597,000035A -19-12JUL17-1/4

2. Check coolant level of the radiator expansion tank (C). If the engine is cold and coolant level is below LOW, add coolant to the expansion tank until level reaches LOW mark.

NOTE: With engine cold, coolant level must be at the LOW mark. At operating temperature coolant level of a tractor must be at the FULL mark.

3. Lubricate the following points every 10 hours if operating the tractor in wet or excessively muddy conditions.
   - Front axle pivot pins.
   - Rear axle bearings.
4. Lubricate the following items after pressure washing, if necessary:
   - Hood latch
   - Operator seat slide rails

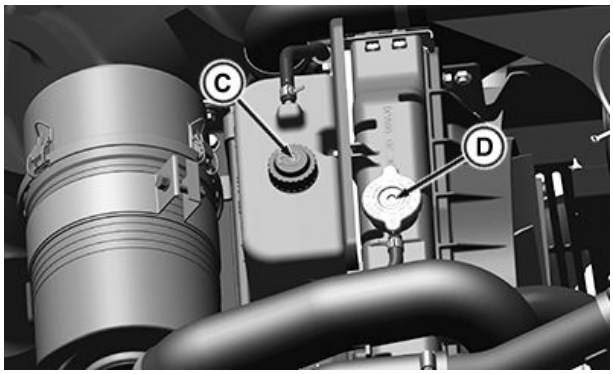

PY40214 —UN—14FEB17

C—Radiator Expansion Tank **D—Radiator Cap**

Continued on next page

VP27597,000035A -19-12JUL17-2/4

IMPORTANT: Never run the engine when the dust unloading valve is removed!

5. Remove deposits by squeezing the valve.

   During harvesting, grass and chaff may adversely affect the performance of the dust unloading valve. Remove and clean the dust unloading valve as necessary. Replace damaged valve immediately.

E—Dust Unloading Valve

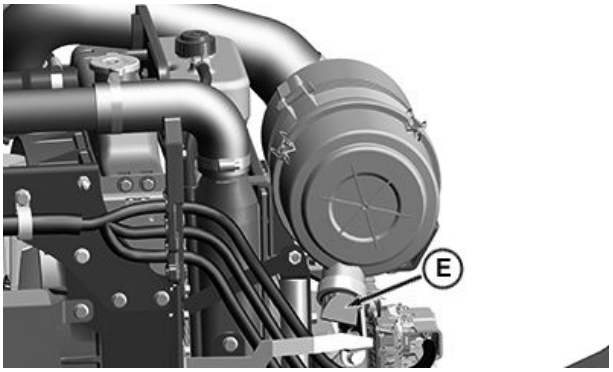

PY40216 —UN—14FEB17

VP27597,000035A -19-12JUL17-3/4

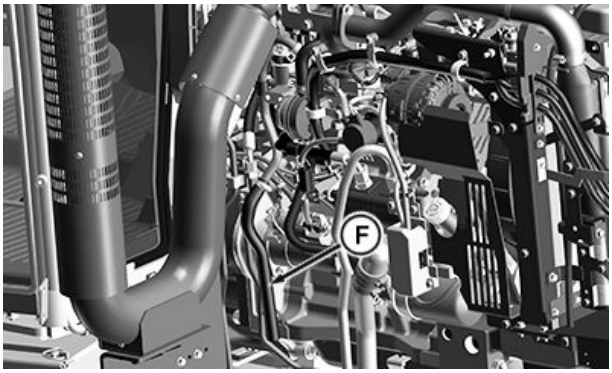

PY40217 —UN—14FEB17

Rocker Arm Cover Ventilation - For Cab Tractors

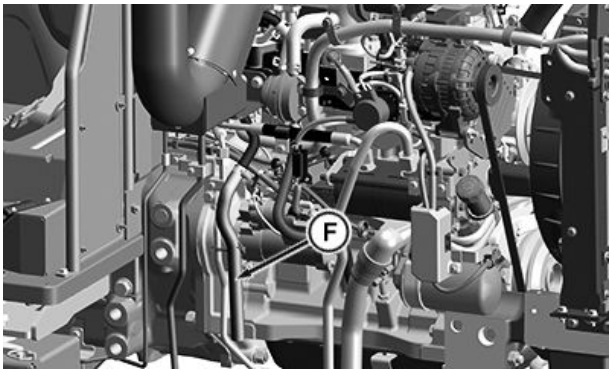

PY40218 —UN—14FEB17

Rocker Arm Cover Ventilation - For OOS Tractors

F—Vent hose

6. Make sure the hose (F) of the rocker arm cover ventilation is not pinched.

   Remove any dirt from the hose end.

VP27597,000035A -19-12JUL17-4/4

Operate Key Switch

NOTE: If temperature is below 5°C (41°F), refer to Cold Weather Starting procedure in this section.

Accessory Position (A): Push in and turn key to ACCESSORY position to power electrical functions.

Stop Position (B): Turn key to STOP position to turn off electrical accessories and to shut down engine.

Run Position (C): Turn key to RUN position and check gauges and indicator light before advancing to START position.

Start Position (D): Turn key to START position to crank and start engine. Key returns to RUN position when released.

A—Accessory Position
B—Stop Position
C—Run Position
D—Start Position

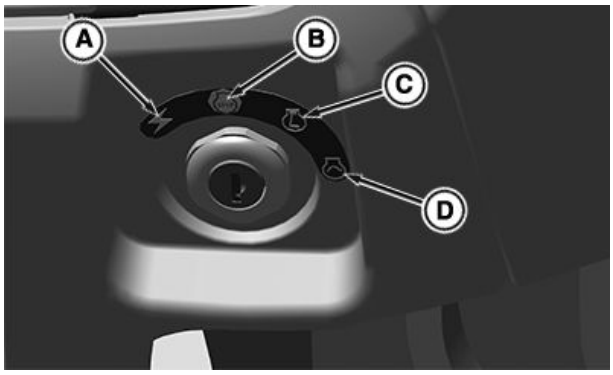

PY41783 —UN—20JUL17

Cab Tractors

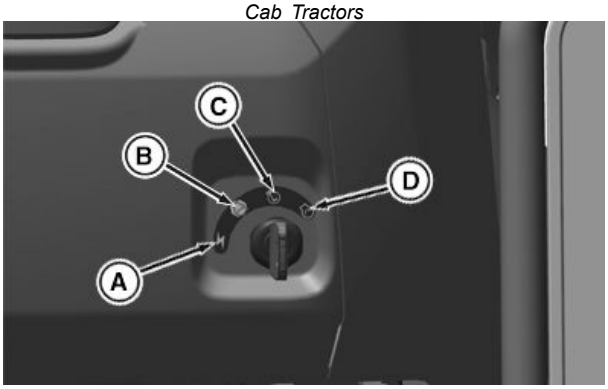

PY43067 —UN—12JUL17

OOS Tractors

NM61126,0000516 -19-18SEP17-1/1

Before Starting the Engine — (PowrReverser™)

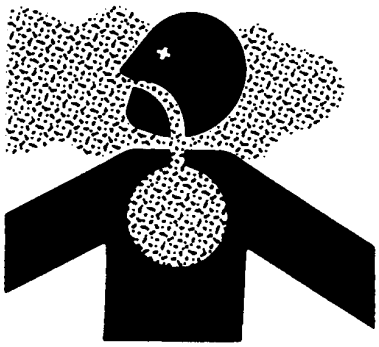

TS220 —UN—15APR13

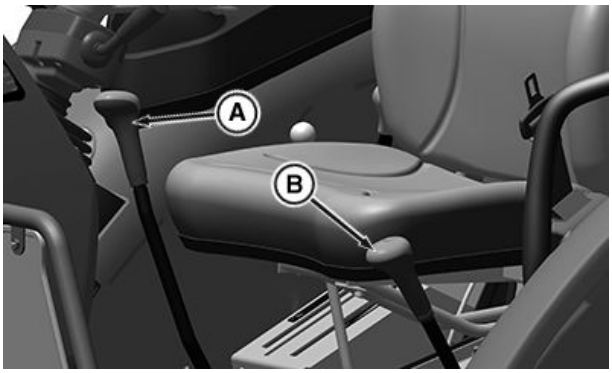

PY39640 —UN—01FEB17

OOS

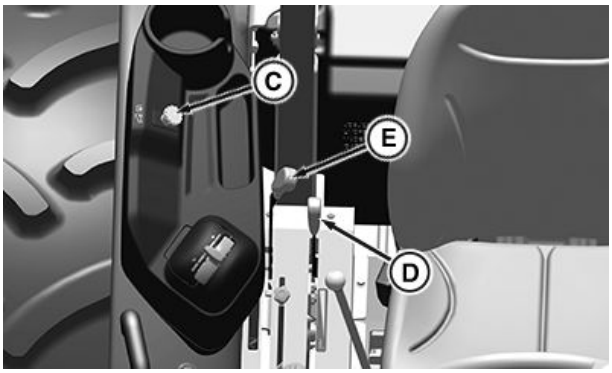

PY39644 —UN—01FEB17

OOS

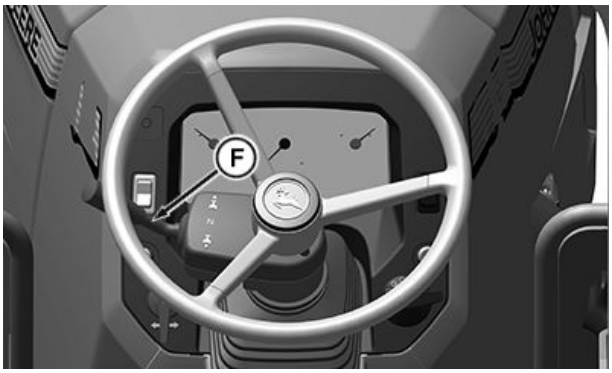

PY39643 —UN—01FEB17

OOS

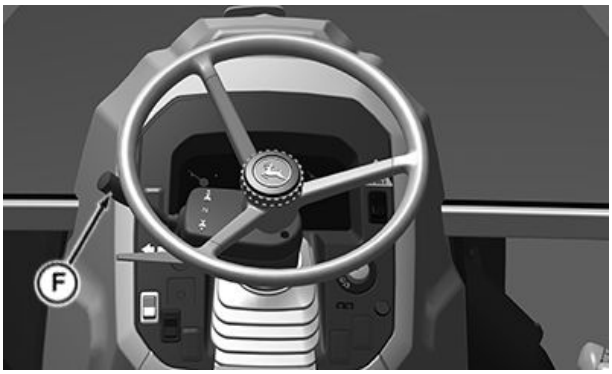

PY39642 —UN—30MAR17

Cab

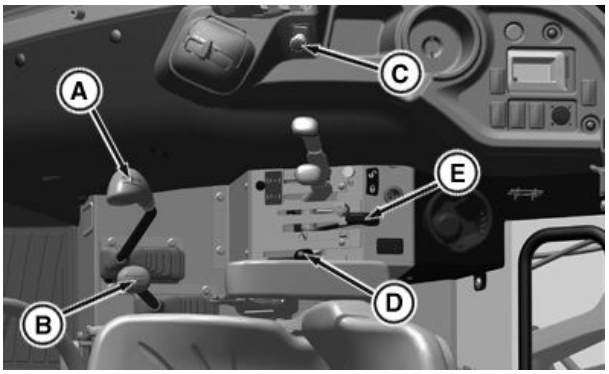

PY43075 —UN—18JUL17

Cab

A—Gear Shift Lever
B—Range Shift Lever
C—PTO Switch
D—Rockshaft Draft Control Lever
E—Rockshaft Position Control Lever
F—FNR Lever

CAUTION: Prevent asphyxiation. Engine exhaust fumes can cause sickness or death to you or someone else.

If you must operate engine in a building, be positive there is adequate ventilation. Either use an exhaust pipe extension to remove the exhaust fumes or open doors and windows to bring enough outside air into the area.

1. Check fuel gauge to be sure that tractor has plenty of fuel.
2. Place gearshift lever (A) in park position (P) and range shift lever (B) in NEUTRAL (N) and PTO Switch (C) in OFF position.

NOTE: Do not use starter if gearshift lever and PTO Switch are not in these positions.

3. Place rockshaft control levers (D and E) in lowered position.
4. Place FNR lever (F) in NEUTRAL (N)

Continued on next page

VP27597,000032A -19-18JUL17-1/2

5. Check indicator lights. Indicators illuminate when the key switch is turned to the ON position.

If any indicator does not function properly, see your John Deere dealer.

VP27597,000032A -19-18JUL17-2/2

Before Starting the Engine — (SyncShuttle)

TS220 —UN—15APR13

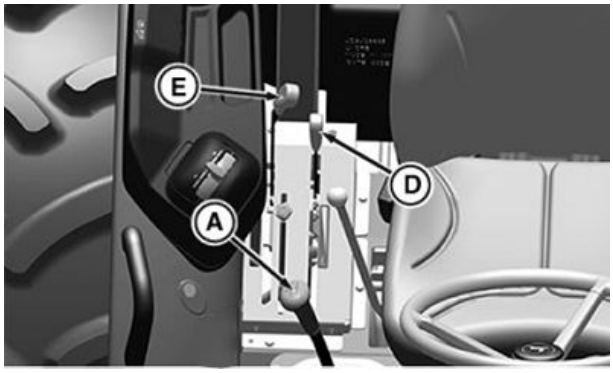

PY39645 —UN—20JUL17

OOS

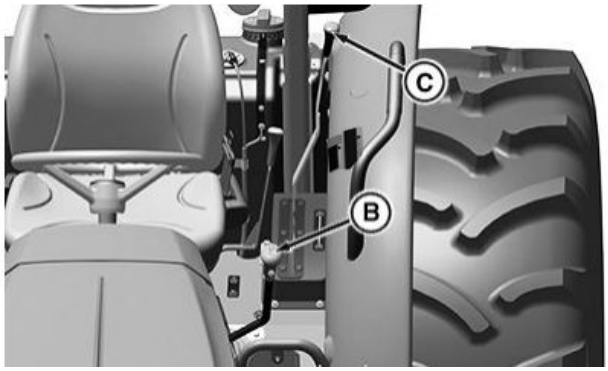

PY39646 —UN—20JUL17

OOS

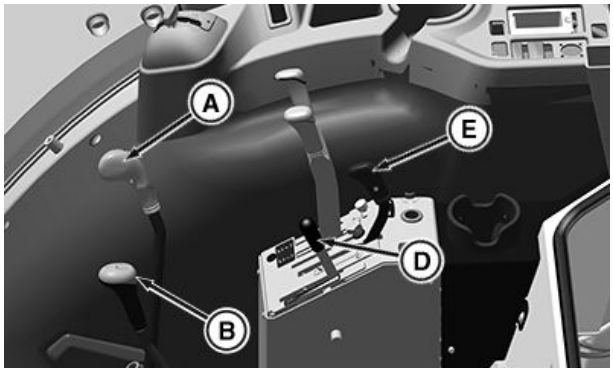

PY39647 —UN—01FEB17

Cab

CAUTION: Prevent asphyxiation. Engine exhaust fumes can cause sickness or death to you or someone else.

If you must operate engine in a building, be positive there is adequate ventilation. Either use an exhaust pipe extension to remove the exhaust fumes or open doors and windows to bring enough outside air into the area.

1. Check fuel gauge to be sure that tractor has plenty of fuel.
2. Place gearshift lever (A) in park position (P) and range shift lever (B) in NEUTRAL (N) and PTO lever (C) in OFF position. Do not use starter if gearshift lever and PTO lever are not in these positions.
3. Place rockshaft control levers (D and E) in lowered position.
4. Check indicator lights. Indicators illuminate when the key switch is turned to the ON position.

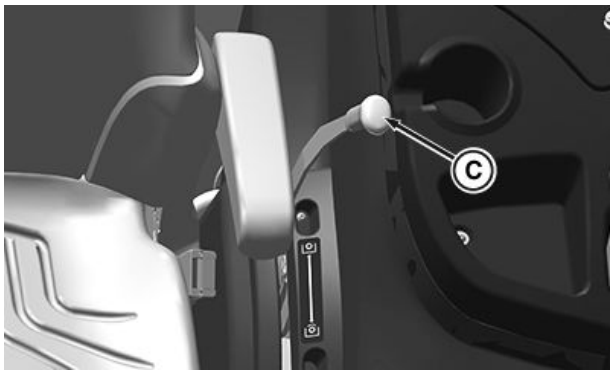

PY40813 —UN—31MAR17

Cab

A—Gear Shift Lever
B—Range Shift Lever
C—PTO Lever
D—Rockshaft Draft Control Lever
E—Rockshaft Position Control Lever

If any indicator does not function properly, see your John Deere dealer.

VP27597,000032B -19-31MAR17-1/1

Start the Engine

NOTE: If the tractor equipped with creeper, start the engine with the range lever in neutral position and gear lever in park position.

1. Push hand throttle (A) forward off idle position (1/3 of full throttle). Pull down throttle else engine not get start.

A—Hand Throttle

TS177 —UN—11JAN89

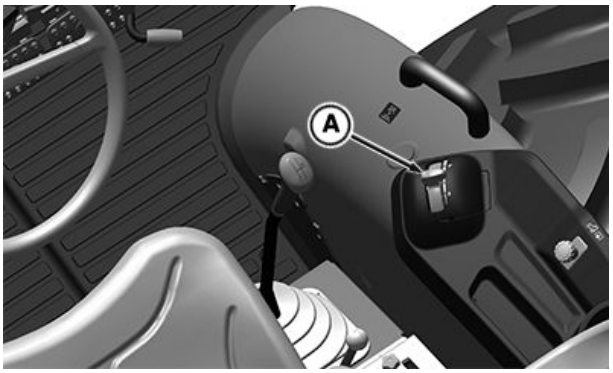

PY39650 —UN—20JUL17

OOS

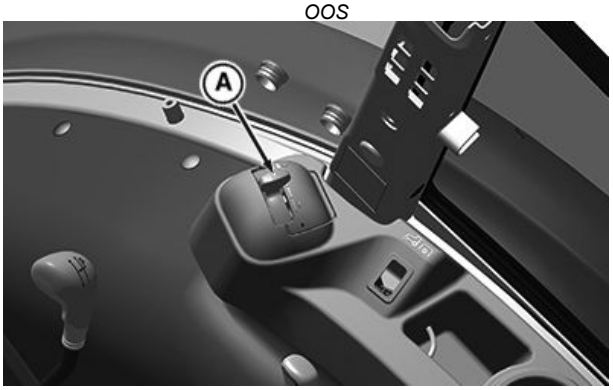

PY39651 —UN—14FEB17

CAB

Continued on next page

VP27597,000032C -19-12JUL17-1/2

2. Depress clutch pedal and turn the key switch fully clockwise (B) to engage the starter. Release key when engine starts. If key is released before engine starts, wait until starter and engine stop turning before trying again.

CAUTION: Avoid possible injury or death from a machine runaway.

Do not start engine by shorting across starter terminals. Machine starts in gear and move if the normal circuitry is bypassed.

Start engine only from the operator's seat with transmission in NEUTRAL.

NEVER start engine while standing on ground.

IMPORTANT: DO NOT run a cold engine at full throttle.

IMPORTANT: DO NOT operate starter more than 20 seconds at a time. If engine does not start, wait at least two minutes for the starter motor to cool before trying again. If engine does not start in four attempts, refer to "Troubleshooting" section.

B—Key Switch On

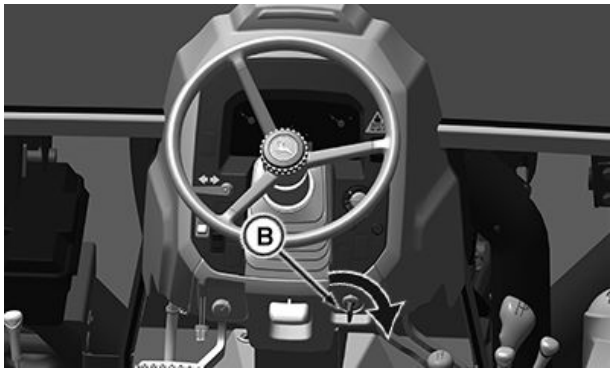

PY39657 —UN—01FEB17

Cab

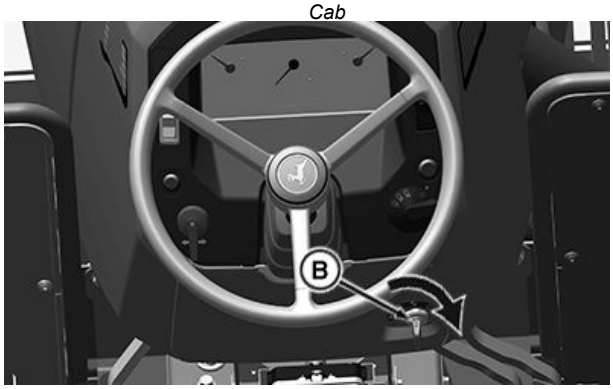

PY39656 —UN—01FEB17

OOS

VP27597,000032C -19-12JUL17-2/2

Cold-Weather Start Aid

CAUTION: Do Not use starting fluid on engines equipped with glow plugs or air intake heaters. Ether injector starting fluid is highly flammable and would explode, causing serious injury.

Tractors are equipped with pre-heaters as a standard equipment starting aid.

1. To activate cold weather starting device, turn key to ignition ON position (C).
   - Allow the engine ECU to complete the cycle of determining the ambient temperature and energize cold start aid relay for activating the heater, if necessary.
   - Once the cold start relay is active, count down timer (E) is displayed in the instrument cluster indicating the time required for heating the grid.

IMPORTANT: Do Not start the engine until the count down timer (E) is completed to zero.

2. Depress clutch pedal and turn key to start position (D).
3. If engine runs rough, turn the key to stop/OFF position (B) and then to ignition ON position (C) to reactivate cold weather starting device until engine runs smoothly.

NOTE: Anytime the engine is cranked and does not start, the ignition must be cycled from OFF to ON to reset the preheating cycle of the air heater.

4. Idle engine until it warms to operating temperature.

A—Accessory ON Position
B—Stop/OFF Position
C—Ignition ON Position
D—Start Position
E—Count Down Timer

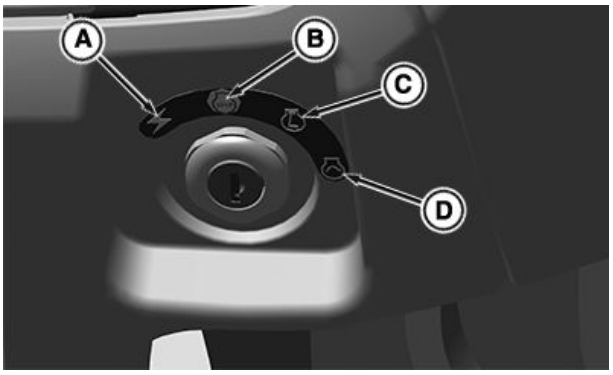

PY41783 —UN—20JUL17

Cab

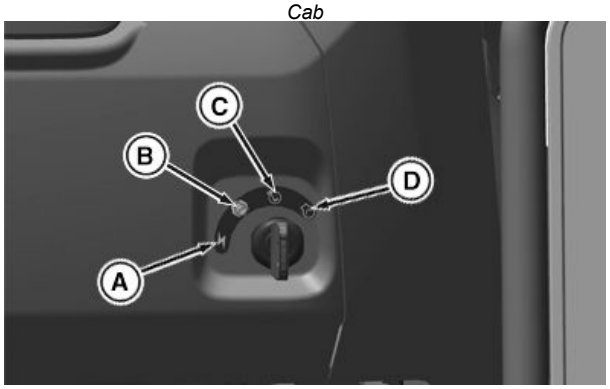

PY43067 —UN—12JUL17

OOS

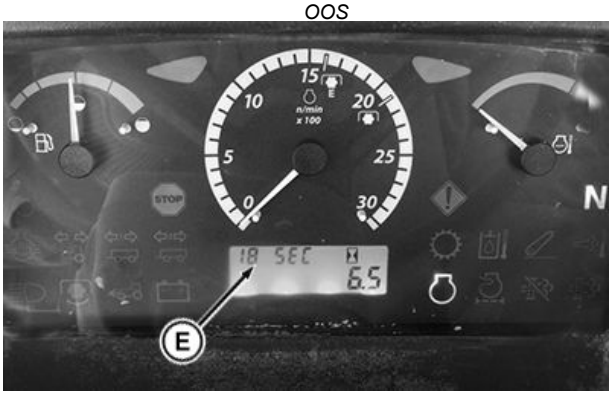

APY19585 —UN—13MAR20

Instrument Cluster

RP32883,0000B21 -19-20FEB20-1/1

Using Engine Coolant Heater (If Equipped)

CAUTION: To avoid shock or hazardous operation, always use a three-wire heavy-duty electrical cord (minimum gauge 10 AWG and no longer than 7.6 m [25 ft]) equipped with three connectors. If a two-to-three contact adapter is used at the wall receptacle, connect green wire to a good ground.

Immerse element in coolant before connecting heater to power source. NEVER energize heater in air.

TS210 —UN—23AUG88

Located on side of the engine, the 110-volt coolant heater warms the engine coolant, reduces oil drag, eases starting, and shortens warm-up time.

Connect heater plug to a ground fault protected 110-volt electrical outlet.

SD74272,000022A -19-05JUL12-1/1

Check Engine Indicators and Gauges

IMPORTANT: If temperature gauge (A) indicates hot, charging system (C) or engine information indicator (B) fail to go out, stop engine, and determine the cause.

Coolant Temperature Gauge (A)

The needle on the temperature gauge rises as engine warms up. If the needle reaches red zone, stop engine and determine the cause.

Check coolant level in the recovery tank and radiator when engine cools. Also check grille, radiator, and radiator screen for plugging. Check fan belt tension. If the problem is not corrected, see your John Deere dealer.

Engine Information Indicator (B)

If engine information indicator remains illuminated after starting engine, stop engine immediately. Check engine oil level, engine oil cooler, and engine oil filter.

IMPORTANT: NEVER operate engine without sufficient oil pressure. If indicator stays lit for longer than five seconds under the normal operating conditions, stop engine and check for cause.

If low oil level is not the problem, see your John Deere dealer.

Charging System Indicator (C)

Charging system indicator will light when alternator output is low. Indicator should light when key is turned to RUN position, and go out when engine starts.

If indicator stays lit for longer than five seconds in normal operation, stop engine and check for cause. If loose or broken fan belt is not the cause, see your John Deere dealer.

Engine Air Cleaner Restriction Indicator (D)

Air restriction indicator will light if air cleaner becomes plugged. Service air cleaner as soon as possible. Indicator should light momentarily when key is turned to START position and go off when engine starts.

Fuel Level Gauge (E)

Stop to refuel before fuel gauge reaches empty mark.

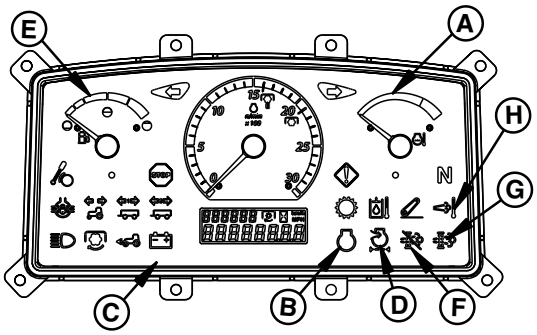

PY40223 —UN—16FEB17

A—Coolant Temperature Gauge
B—Engine Information Indicator
C—Charging System Indicator
D—Engine Air Cleaner Restriction Indicator
E—Fuel Level Gauge
F—Exhaust Filter Inhibit Indicator
G—Exhaust Filter Restriction Indicator
H—Exhaust Filter Cleaning Indicator

IMPORTANT: Use diesel fuel only. See Fuel, Lubricants, and Coolant section for fuel specifications.

Should tractor run out of fuel and not start in several tries, air must be bled from the fuel system. (See Bleed Fuel System in Maintenance—Fuel System section.)

Exhaust Filter Inhibit Indicator (F)

If indicator remains illuminated, the exhaust filter cleaning switch has been disabled.

Exhaust Filter Restriction Indicator (G)

If indicator remains illuminated, the exhaust filter needs cleaning.

Exhaust Filter Cleaning Indicator (H)

If indicator remains illuminated, the presence of high temperatures inside the exhaust filter exist, which allow active filter cleaning to occur.

VP27597,0000333 -19-30MAR17-1/1

Stop/Operator Alert Indicator

ENGINE STOP Indicator (A): Light illuminates and audible alarm beeps to alert operator that a serious malfunction has occurred, which requires immediate attention or the tractor will be damaged.

Immediately stop operations, reduce engine speed to idle, then shut down engine. Correct problem before restarting.

Malfunctions that will cause STOP indicator light to come on include:

- Low engine oil pressure
- High hydraulic oil temperature (PowrReverser/Wet Clutch Tractors)
- High coolant temperature
- Water in fuel
- High manifold air temperature

Service ALERT Indicator (B): Light illuminates and audible alarm beeps to inform operator that a performance or operational problem has been detected, which needs to be resolved as soon as possible. Continued operations can cause a Operator Alert to escalate into a STOP indicator. If appropriate corrective action is not taken soon (serviced, repaired, operated in a different manner), a significant reduction in performance will occur, resulting in machine damage.

Malfunctions that will cause Service indicator light to come on include:

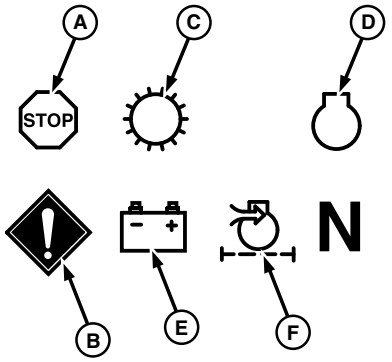

P15313 —UN—26MAR08

STOP Indicator

A—STOP Indicator
B—Operator Alert Indicator
C—Transmission Information Indicator (PowrReverser/Wet Clutch Tractors)
D—Engine Information Indicator
E—Charging System Indicator
F—Engine Air cleaner Restriction indicator

- Low engine oil pressure
- High hydraulic oil temperature (PowrReverser/Wet Clutch Tractors)
- High coolant temperature
- Rear PTO switch on and operator out of seat
- Water in fuel
- High manifold air temperature

SD74272,00004B9 -19-19MAR14-1/1

Changing Engine Speed

To increase or decrease engine speed, use hand throttle (B). Engine maintains set speed until hand throttle is moved again. Maximum speed is attained with lever all the way up, and minimum speed with lever all the way down, as indicated by the fast/slow indicator (A) on the instrument panel.

To temporarily increase engine speed, use foot throttle (C). Engine speed returns to prior speed as soon as the foot throttle lever is released.

A—Fast/Slow Indicator
B—Hand Throttle
C—Foot Throttle

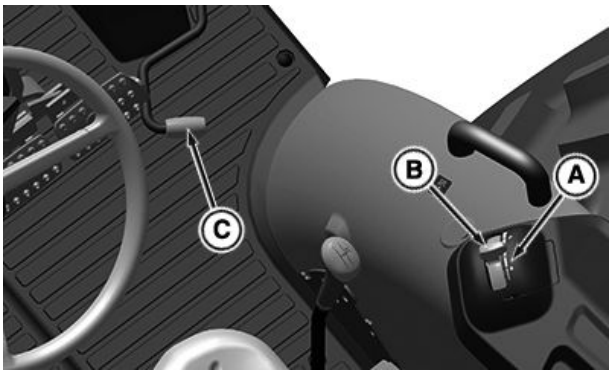

PY41784 —UN—20JUL17

OOS

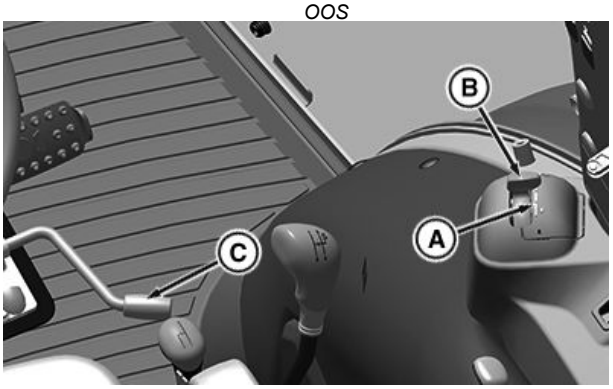

PY39659 —UN—16FEB17

Cab

VP27597,000032D -19-20JUL17-1/1

Recommended Engine Speeds and Operating Procedures

Tachometer (A) shows engine rpm, read in hundreds.

Warming up Engine

Do not place the tractor under full load until it is properly warmed up.

1. Idle engine at 1200—1500 rpm for several minutes.
2. Run engine at about 1900 rpm and under light load until engine reaches normal operation condition.

Avoid Idling Engine

Allowing engine to idle at low rpm uses fuel inefficiently, and can cause a buildup of carbon in the engine.

If the tractor must be left with the engine running more than three or four minutes, minimum engine speed should be 1200 rpm.

Observe Engine Work and Idle Speeds

Slow idle speed should be 890—910 rpm. At light or no load, full throttle speed increases to 2190—2210 rpm.

Normal working speed is 1700—2100 rpm rated speed. Within this limits engine can be put under full load.

For correct PTO speed, run engine at:

- 2083 rpm for standard 540 rpm operation.
- 1588 rpm for economical 540 rpm operation.

Restarting Stalled Engine

The engine stall when operating under load, depress clutch and restart it immediately to prevent abnormal heat buildup and continue with normal operation, or operate at low idle for one or two minutes before stopping.

NOTE: Economic PTO option is only available for PowrReverser™ transmission.

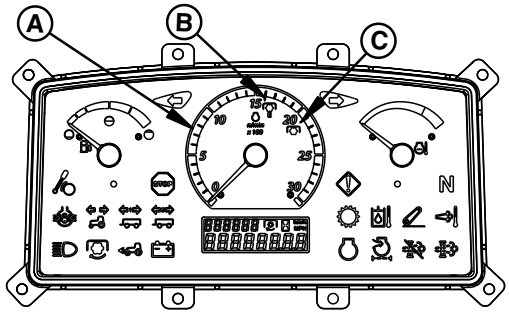

PY39664 —UN—11MAY17

Instrument Cluster

A—Tachometer
B—1588 rpm Mark (540E PTO rpm)
C—2083 rpm Mark (Standard PTO rpm)

VP27597,0000334 -19-11MAY17-1/1

Working with Speed/Hour Meters

Tachometer (A) shows engine revolutions per minute, read in hundreds.

For standard 540 rpm PTO speed, increase engine speed until tachometer needle is aligned with 2083 rpm mark (B).

Hour meter (C) shows hours of operation in full hours and tenths.

NOTE: **For 12x12 PR Transmission:** *Hour Meter/Ground Speed (LCD Digital) (C) displays hours when tractor is not moving. When the tractor is moving, display switches to ground speed. When the tractor is stopped, display changes back to hours.*

For 9x3 SyncShuttle Transmission : *Hour Meter/Ground Speed (LCD Digital) (C) displays only engine hours irrespective of tractor is moving or at stationary.*

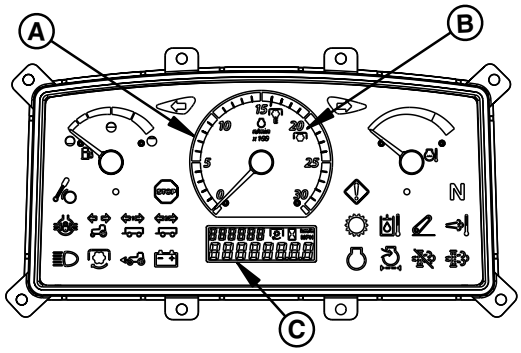

PY39662 —UN—16FEB17

A—Tachometer
B—2083 rpm Mark
C—Hour Meter

VP27597,0000335 -19-11MAY17-1/1

Engines with Turbocharger

IMPORTANT: If the engine “stalls” when in operation, restart it IMMEDIATELY. This will prevent the turbocharger from overheating.

Most damage to the turbocharger is caused by not following the correct procedure when starting and shutting off the engine. After starting and before shutting off, idle the engine without load for at least 30 seconds.

LX,OMMOT 013413 -19-01SEP97-1/1

Stopping the Engine — (PowrReverser™)

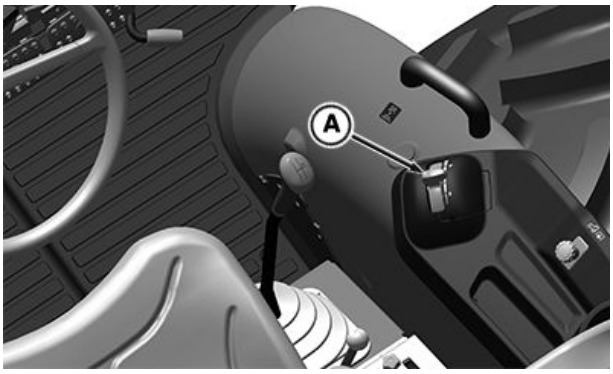

PY41790 —UN—20JUL17

OOS

PY39651 —UN—14FEB17

Cab

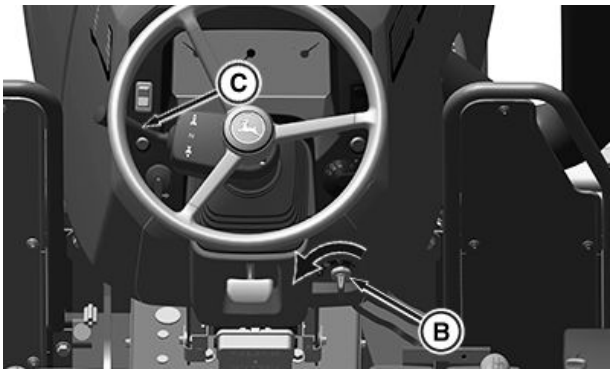

PY39655 —UN—01FEB17

OOS

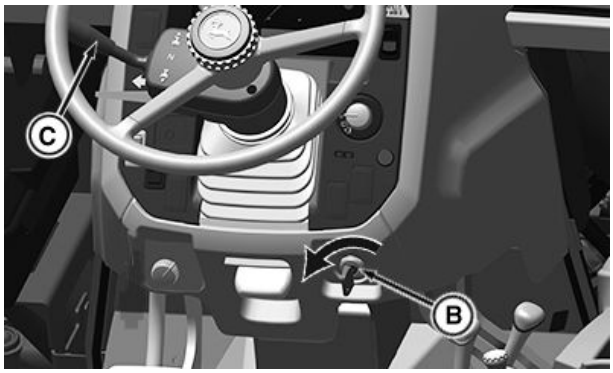

PY39648 —UN—01FEB17

Cab

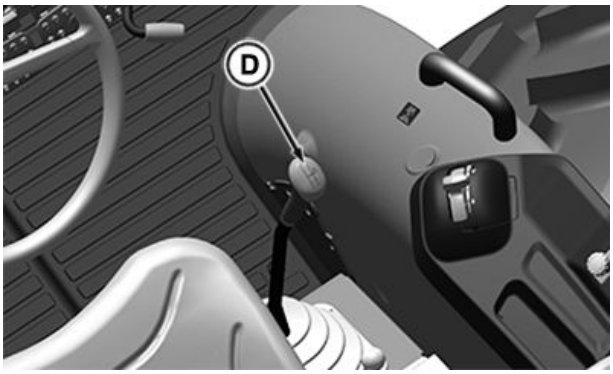

PY41791 —UN—20JUL17

OOS

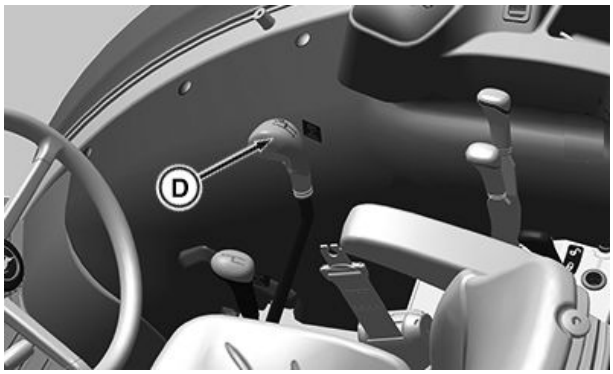

PY40812 —UN—31MAR17

Cab

A—Hand Throttle **B—Key Switch OFF** **C— Lever** **D—Gear Shift Lever**

1. Pull hand throttle (A) back to too low idle position.
2. Put gearshift lever (D) or PowrReverser™ lever (C) in NEUTRAL.
3. Push gearshift lever (D) to Park position (P).
4. Lower all equipment to the ground, put all SCV levers in NEUTRAL and disengage PTO.
5. Allow engine to idle for one to two minutes.

IMPORTANT: Cooling of the certain engine parts is provided by engine oil. Stopping a hot engine suddenly could cause damage to these parts by overheating or lack of lubrication.

6. Turn key switch to the OFF position (B).

CAUTION: Remove key from the tractor ignition switch to prevent operation by untrained personnel.

Continued on next page

VP27597,000032E -19-27JUL17-1/2

VP27597,000032E -19-27JUL17-2/2

Stopping the Engine — (SyncShuttle)

PY41787 —UN—20JUL17

OOS

PY39651 —UN—14FEB17

Cab

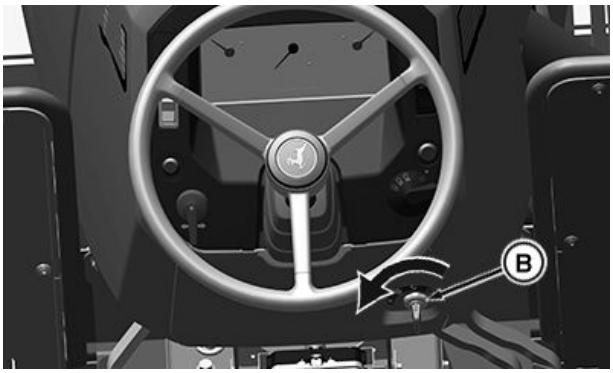

PY39649 —UN—01FEB17

OOS

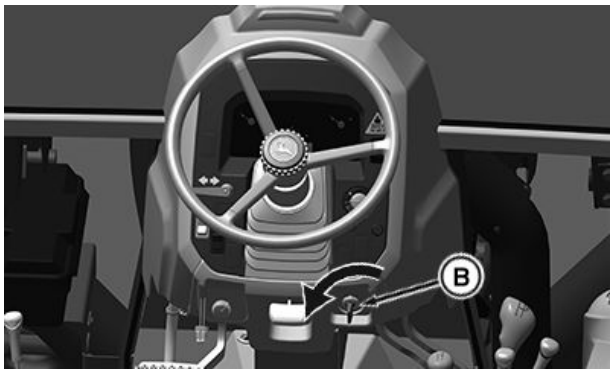

PY39654 —UN—01FEB17

Cab

PY41788 —UN—20JUL17

OOS

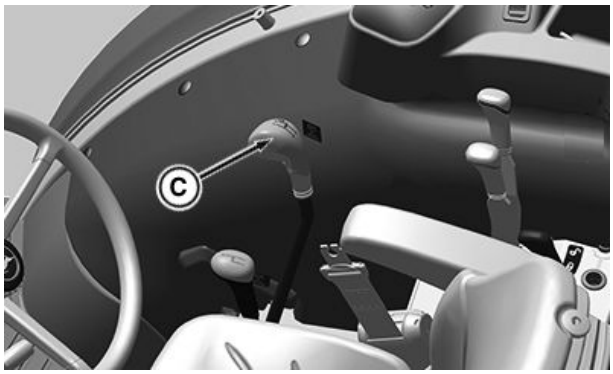

PY39653 —UN—01FEB17

Cab

A—Hand Throttle **B—Key Switch OFF** **C—Gear Shift Lever**

1. Pull hand throttle (A) back to low idle position. Allow engine to idle for one to two minutes.
2. Put gearshift lever (C) in NEUTRAL position.
3. Place the gearshift lever (C) in Park (P).
4. Lower all equipment to the ground, put all SCV levers in NEUTRAL and disengage PTO.
5. Allow engine to idle for one to two minutes.

IMPORTANT: Cooling of the certain engine parts is provided by engine oil. Stopping a hot engine suddenly could cause damage to these parts by overheating or lack of lubrication.

6. Turn key switch to the OFF position (B).

CAUTION: Remove key from the tractor ignition switch to prevent operation by untrained personnel.

VP27597,000032F -19-27JUL17-1/1

Use a Booster Battery or Charger

CAUTION: Battery gas is explosive. Keep sparks and flames away from battery. Make the last connection and first disconnection at a point away from the booster battery.

IMPORTANT: Be sure that polarity is correct before making connections. Reversed polarity can damage electrical system or possibly cause battery to explode.

When using two or more booster batteries, batteries must be connected in PARALLEL. Do NOT connect batteries in SERIES.

TS204 —UN—15APR13

SD74272,000022D -19-25MAR20-1/2

Booster Battery

1. Access battery. (See procedure in “Maintenance—Electrical System” section.)
2. Connect red positive (+) booster cable to a booster battery positive (+) post (D).
3. Connect other end of positive (+) booster cable to a tractor battery positive (+) post (A).
4. Connect black negative (—) booster cable to a booster battery negative (—) post (C).
5. Connect other end of negative (—) booster cable to engine ground (B), away from battery and starter.
6. Turn key to START position.
7. When engine starts, remove negative (—) cable first, then positive (+) cable.

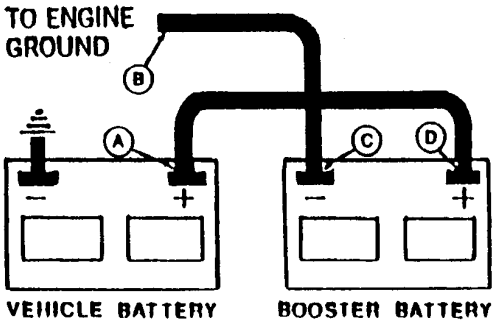

M71044 —19—24JUL90

A—Tractor Battery Positive (+) Post
B—Engine Ground
C—Booster Battery Negative (—) Post
D—Booster Battery Positive (+) Post

Battery Charger

1. With charger OFF, attach red positive lead to positive (+) battery terminal and negative charger lead to a good ground on the engine block, away from battery.

IMPORTANT: Do NOT set battery charger to higher than 12 Volts.

2. Switch charger ON and charge battery according to charger manufacturer instructions.
3. Switch charger OFF. Disconnect negative charger lead first, then positive lead.

SD74272,000022D -19-25MAR20-2/2

Exhaust Filter System Overview

Your machine is equipped with an emission-compliant engine, which cleans and filters the engine exhaust. Under normal machine operation and with the system in Automatic (AUTO) mode, the system requires minimal operator interaction. Read the Exhaust Filter Cleaning sections to understand when and where operator interaction may be required.

To avoid the unnecessary buildup of diesel particulates or soot in the exhaust filter system:

- Utilize AUTO exhaust filter cleaning mode.
- Avoid unnecessary idling.
- Use proper engine oil. (See Fuels, Lubricants, and Coolants section for recommendations.)
- Use only ultra low sulfur fuel. (See Fuels, Lubricants, and Coolants section for recommendations.)

Use three position exhaust filter cleaning mode switch (A) to select exhaust filter cleaning modes; Parked (B), AUTO (C), and Disable (D).

IMPORTANT: When vehicle use is not suited for higher temperatures created by exhaust filter cleaning, use the Disable mode (D). Be sure to re-enable Automatic mode (C) as soon as possible to avoid unnecessary soot built up in the exhaust filter.

Remember to select Disable mode (D) when temporarily connected to an indoor ducted exhaust system during the vehicle diagnostic and repair activities.

PY40222 —UN—14FEB17

Exhaust Filter Cleaning Mode Switch—Location

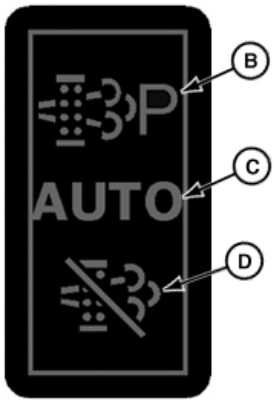

LV14473 —UN—27JUL11

Exhaust Filter Cleaning Mode Switch

A—Exhaust Filter Cleaning Mode Switch
B—Parked
C—Automatic (AUTO)
D—Disable

VP27597,0000336 -19-14FEB17-1/6

Exhaust Filter Indicators

Exhaust Filter Indicator (restriction) (A) - Indicates that buildup in the exhaust filter requires cleaning.

High Exhaust Temperature Indicator (B) - Indicates temperature in the exhaust filter high enough to conduct cleaning.

Exhaust Filter Disabled Indicator (C) - Indicates that exhaust filter cleaning system is disabled.

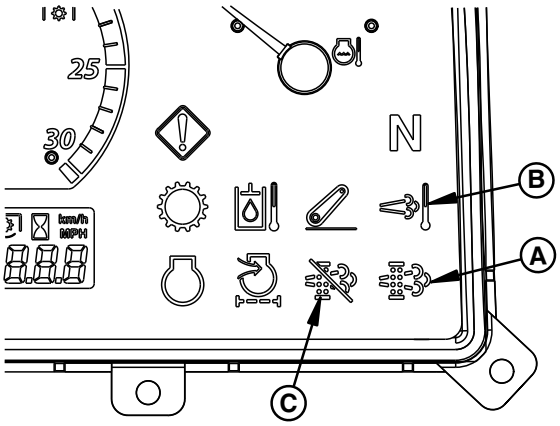

PY39661 —UN—03FEB17

Exhaust Filter Indicators

Continued on next page

VP27597,0000336 -19-14FEB17-2/6

Operator Information

1. Exhaust Filter Indicator

Description	Recommended Procedure
High level of soot at the exhaust filter, the exhaust filter requires cleaning. *NOTE: Engine power is reduced if no cleaning is carried out.*	Activate automatic filter cleaning; see **Automatic Exhaust Filter Cleaning**. Alternatively, exhaust filter cleaning with tractor parked may be carried out; see **Parked Exhaust Filter Cleaning**.

H94828 —UN—13OCT09

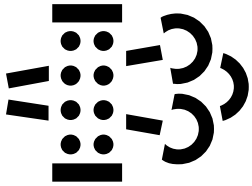

VP27597,0000336 -19-14FEB17-3/6

2. High Exhaust Temperature Indicator

Description	Recommended Procedure
Exhaust filter cleaning is taking place. Exhaust temperature may be high.	Do not interrupt automatic exhaust filter cleaning unless necessary; see **Automatic Exhaust Filter Cleaning**.

LX1049779 —UN—22JUL10

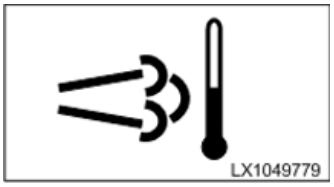

VP27597,0000336 -19-14FEB17-4/6

3. Parked Exhaust Filter Cleaning Required

Description	Recommended Procedure
High level of soot at the exhaust filter, the exhaust filter requires cleaning. Note: Engine power is reduced.	Perform **Parked Exhaust Filter Cleaning**.

LX1049777 —UN—22JUL10

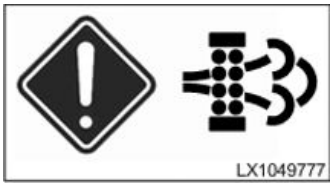

VP27597,0000336 -19-14FEB17-5/6

4. Service Exhaust Filter Cleaning Required

Description	Recommended Procedure
Extreme level of soot in the exhaust filter. When this level of contamination is reached, service cleaning must be performed. Note: Engine power is reduced.	Contact your John Deere dealer and get the dealer to service-clean the exhaust filter. See **Service Exhaust Filter Cleaning**.

LX1049776 —UN—22JUL10

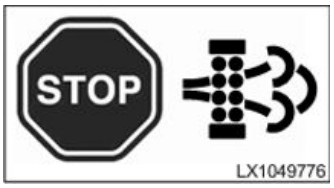

VP27597,0000336 -19-14FEB17-6/6

Automatic (AUTO) Exhaust Filter Cleaning

Automatic exhaust filter cleaning is started when soot in the exhaust filter reaches a certain level. This occurs less frequently if the engine is operated for long periods under conditions where passive exhaust filter cleaning takes place. Automatic exhaust filter cleaning is initiated and performed without any intervention on the part of the operator. Automatic exhaust filter cleaning is performed only if the relevant function is activated on the exhaust filter cleaning mode switch.Select center detent of Exhaust Filter Cleaning Switch (A) to enable Automatic (AUTO) Exhaust Filter Cleaning mode.

If the system determines that soot buildup in the exhaust filter requires cleaning, an automatic cleaning is initiated and performed without any intervention on the part of the operator. High Exhaust Temperature Indicator (B) remains illuminated during the exhaust filter cleaning.

Do not disable automatic exhaust filter cleaning unless it is absolutely necessary.

CAUTION: To prevent fires, be sure to routinely clear any combustible materials (crop debris, animal nests, etc.) from the area of the engine and exhaust filter. Exhaust filter cleaning uses extremely high temperature.

IMPORTANT: See also *Clean Exhaust Filter Safely* in Section 05.

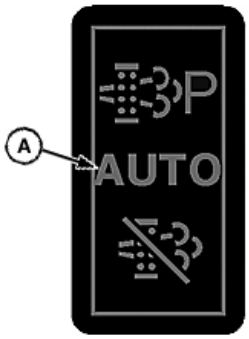

LV14382 —UN—25MAY11

Exhaust Filter Cleaning Mode Switch

LV14384 —UN—25MAY11

A—AUTO mode switch position **B—High Exhaust Temperature Indicator**

SD74272,00004BD -19-12MAR13-1/1

Disabled Exhaust Filter Cleaning

IMPORTANT: It is recommended to operate vehicle with the exhaust filter cleaning mode switch in the AUTO position (D).

If your vehicle must be used in a situation not suited for higher temperatures created during exhaust filter cleaning, the system can be temporarily disabled. Be sure to enable automatic (AUTO) mode as soon as possible to avoid soot buildup in the exhaust filter.Select bottom detent of Exhaust Filter Cleaning Switch (A) to engage Disable Exhaust Filter Cleaning mode. Exhaust Filter Disabled Indicator (B) is on.

While in disabled mode, if the system determines that soot buildup in the exhaust filter requires cleaning, Exhaust Filter Indicator - Restriction (C) comes on. Move Exhaust Filter Cleaning Switch (D) to engage Automatic (AUTO) Exhaust Filter Cleaning mode. High Exhaust Temperature Indicator (B) remains illuminated during the exhaust filter cleaning.

Do not disable automatic exhaust filter cleaning unless it is absolutely necessary. If disabled mode use frequently, the system will eventually activate a parked exhaust filter cleaning. Meaning the vehicle will run a longer cleaning process and can not be unloaded.

A—Exhaust Filter Cleaning Switch - Disable selected
B—Exhaust Filter Disabled Indicator
C—Exhaust Filter Indicator - Restriction
D—Exhaust Filter Cleaning Switch - AUTO selected
E—High Exhaust Temperature Indicator

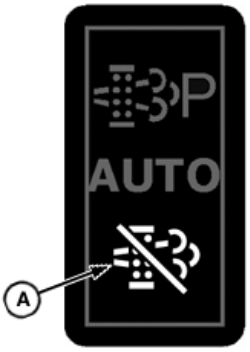

Exhaust Filter Cleaning Switch - Disable selected

LV14390 —UN—25MAY11

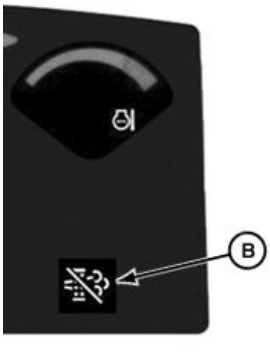

Exhaust Filter Cleaning Disable Indicator

LV14476 —UN—27JUL11

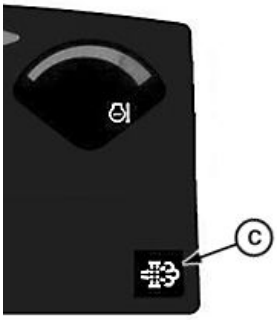

LV14385 —UN—27JUL11

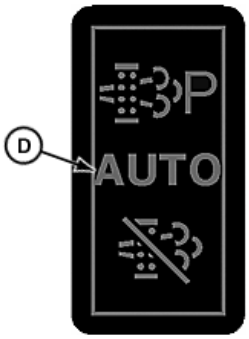

LV14391 —UN—27JUL11

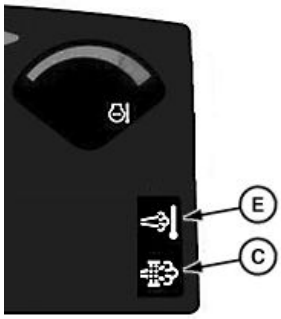

LV14392 —UN—27JUL11

SD74272,00004BE -19-12MAR13-1/1

Parked Exhaust Filter Cleaning

IMPORTANT: If operator disregards indicators and continues to operate vehicle without allowing an automatic cleaning, engine performance will be reduced. A parked exhaust filter cleaning procedure must be performed.

When Service Alert and Exhaust Filter Cleaning Indicator (on dash) are illuminated, Exhaust Filter Cleaning Indicator on switch (top position) is blinking, and engine power is reduced, exhaust filter is restricted, and the system requires a parked cleaning. Operator will hear five consecutive tones.

H94831 —UN—13OCT09

Service Alert Indicator

H94828 —UN—13OCT09

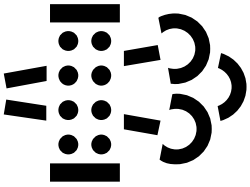

Exhaust Filter Cleaning Indicator (IP) - Restriction

LV14837 —UN—03OCT11

Exhaust Filter Cleaning Switch - Parked mode

Continued on next page

SD74272,00004BF -19-12MAR13-1/2

CAUTION: Comply with *Clean Exhaust Filter Safely* in Section 05.

IMPORTANT: Select a suitable space to park the vehicle and lower any implements all the way down to the ground.

No other vehicle functions may be used while exhaust filter cleaning is taking place with the vehicle parked. Excluded from this are functions that may be required for an emergency shutdown of the vehicle.

Do not start exhaust filter cleaning if the fuel gauge has been showing a low fuel level for a long time.

1. Stop tractor, place transmission in park position, disengage PTO, and set engine idle to low 900 RPM.
2. Position and hold the exhaust filter cleaning switch in the parked cleaning position (A) for 3 seconds then release.

IMPORTANT: If necessary, a parked exhaust filter cleaning process can be canceled by manually advancing throttle, or engaging transmission, or stopping engine.

3. The engine speed will ramp up to 1800 RPM and the park cleaning symbol on the switch will blink.
4. During the parked cleaning process the high exhaust temperature indicator (B) and park cleaning symbol on the switch will illuminate.

NOTE: The parked exhaust filter cleaning process will take 30 to 45 minutes to complete.

5. A percent numeric value of the parked cleaning process is shown in information display (C). First a preparation stage value increases from 1 to 100. During the preparation stage, the exhaust filter cleaning system increases engine speed to increase exhaust temperature. Second an exhaust filter cleaning value increases from 1 to 100. During the cleaning stage, diesel particulates or soot is cleaned from exhaust filter.
6. When the parked cleaning process is complete the park cleaning symbol on the switch turns off and the high exhaust system temperature indicator (B) remains on for 30 seconds after completion.
7. After high exhaust temperature indicator (B) turns off, continue vehicle operations as normal

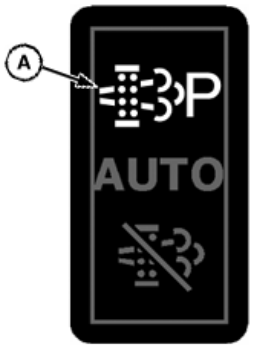

LV14393 —UN—25MAY11

Exhaust Filter Cleaning Switch - Parked mode

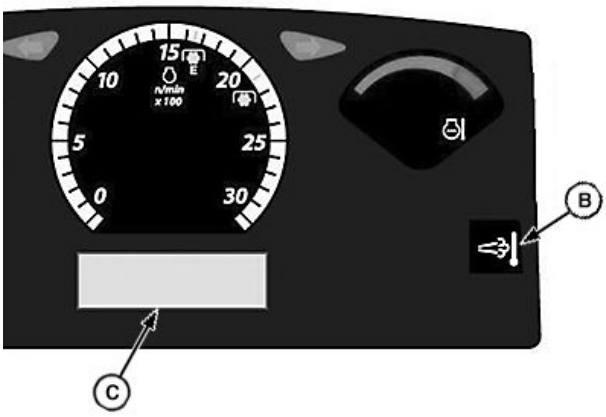

LV14394 —UN—25MAY11

Parked Cleaning In Process

A—Parked Cleaning Position
B—Exhaust Filter Indicator
C—Information Display

NOTE: The system defaults to Automatic (AUTO) exhaust filter cleaning mode.

If not returning vehicle to operation, allow engine time to return to normal operating temperature before stopping engine.

IMPORTANT: If operator disregards indicators and continues to operate vehicle without allowing a parked cleaning, engine performance will be reduced. A service exhaust cleaning procedure must be performed by John Deere dealer.

SD74272,00004BF -19-12MAR13-2/2

Service Exhaust Filter Cleaning

IMPORTANT: Repeated cancellation or ignoring indicators to perform a parked exhaust filter cleaning procedure will cause additional engine power limitations which eventually lead to a dealer require service.

When STOP indicator (B) and exhaust filter cleaning indicator - restriction (C) are illuminated at the same time; contact your John Deere dealer.

If level of soot at exhaust filter is extreme, the icon shown opposite appears and engine power is reduced. In this case, contact your John Deere dealer and get the dealer to service-clean the exhaust filter.

Automatic exhaust filter cleaning and filter cleaning with tractor parked are no longer possible at this time.

NOTE: If the tractor is switched off after this icon appears, it will not reappear immediately if the engine is restarted, and the tractor is **briefly** *capable of operating, albeit with reduced power. This is intentional, the intention being to allow the dealer to perform service-cleaning.*

Tips for avoiding service-cleaning:

- Do not de-activate exhaust filter cleaning unless it is absolutely necessary.
- Avoid unnecessary idling.
- Do not interrupt cleaning process unless it is absolutely necessary.

LX1049776 —UN—22JUL10

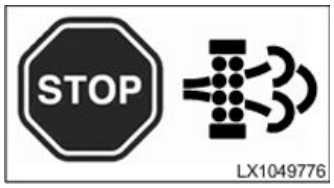

LV14387 —UN—25MAY11

B—Stop Indicator

C—Exhaust Filter Cleaning Indicator - Restriction

- If possible, do not shut off the engine while the indicator light for exhaust filter cleaning is on.
- Take note of information displayed for the operator, and act accordingly.

SD74272,00004C0 -19-12MAR13-1/1

Operator Training Required

- Study the Operation section of this manual before operating tractor.
- Operate tractor in an open, unobstructed area under direction of an experienced operator.
- Learn use of all controls.
- Operator experience is required to learn moving, stopping, turning and other operating characteristics of tractor.

MX,DTIP,AA -19-18MAR92-1/1

Avoid Contact with Agricultural Chemicals

CAUTION: This enclosed cab does not protect against inhaling vapor, aerosol or dust.

1. When operating in an environment where pesticides are present, wear a long-sleeved shirt, long-legged pants, shoes, and socks.
2. If pesticide use instructions require respiratory protection, wear an appropriate respirator inside the cab.
3. Wear personal protective equipment as required by the pesticide use instructions when leaving the enclosed cab:
   - into a treated area
   - to work with contaminated application equipment such as nozzles which must be cleaned, changed or redirected
   - to become involved with mixing and loading activities
4. Before re-entering the cab, remove protective equipment and store either outside the cab in a closed box or some other type of sealable container or inside the cab in a pesticide resistant container, such as a plastic bag.
5. Clean your shoes or boots to remove soil or other contaminated particles prior to entering the cab.

TS220 —UN—15APR13

TS272 —UN—23AUG88

SD74272,0000233 -19-09JUL12-1/1

Cleaning Tractor of Hazardous Pesticides

CAUTION: Avoid personal injury. Clean inside of cab and outside of tractor after application of hazardous pesticides. Pesticide residue can build up.

Clean exterior and interior of tractor daily to prevent contamination:

1. Sweep or vacuum the floor of cab.
2. Clean headliners and inside cowlings of cab.
3. Wash entire exterior of tractor.
4. Dispose of any wash water with hazardous concentrations of active or non-active ingredients according to published regulations or directives.

SD74272,0000234 -19-09JUL12-1/1

Driving on Public Roads

Driving on Public Roads — OOS

CAUTION: When transporting on a public road or highway, use accessory lights and devices for the adequate warning to operators of other vehicles. Check local governmental regulations. Various safety devices are available from your John Deere dealer. Keep safety items in good condition. Replace missing or damaged items.

Observe the following precautions when operating the tractor on the road:

1. Ballast tractor correctly.
2. Use foot throttle instead of the hand throttle.

CAUTION: Before operating tractor on a road, lock brake pedals together. Use brake lightly and cautiously at transport speeds.

3. Couple brake pedals together using brake locking bar (A). Avoid hard applications of brakes. Reduce speed if towed load weighs more than the tractor and is not equipped with brakes.

   Use additional caution when transporting towed loads under adverse surface conditions and when turning or braking on inclines. Be sure that wheel tread is adjusted wide to provide maximum stability.

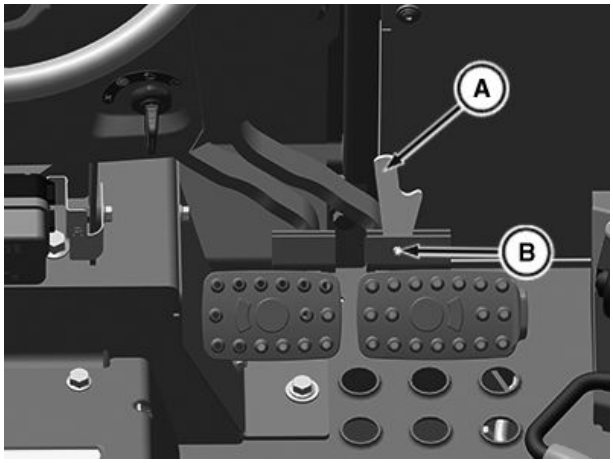

PY44282 —UN—09AUG17

A—Brake Pedal Locking Bar B—Locking Pin

IMPORTANT: To prevent unnecessary wear, never ride the brakes by resting a foot on the pedals.

Continued on next page

RP32883,000032F -19-18JUN19-1/4

4. Check local laws and regulations for lighting requirements. Be sure Slow Moving Vehicle (SMV) emblem (F) and warning lamps are clean and visible. If towed or rear-mounted equipment obstructs these safety devices, install SMV emblem and warning lamps on equipment. (See your John Deere dealer)

   A seven-terminal outlet at rear of tractor supplies power to warning lights on towed or rear-mounted equipment. (See description of the outlet in Lights section.)

5. **MFWD (if equipped):** To reduce tire wear, disengage front wheel drive.

6. **Loader Cylinders (if equipped):** Engage transport lock to eliminate possibility of loader movement during transport by inadvertently bumping the multi-function control lever.

7. **Rear Hitch:** Lock hitch in transport position to eliminate the possibility of lowering an implement during transport by inadvertently bumping the raise/lower lever.

8. Turn light switch to position (D).

   Always turn the light switch to dim lights position (D) when meeting another vehicle. Never use any other lights which could blind or confuse other drivers.

9. Use turn signal when turning. Be sure to return lever (E) to center position after turning.

10. Drive slowly enough to maintain safe control at all times. Before descending a hill, shift to a gear low enough to control speed without using brakes. Slow down for rough ground, and sharp turns, especially when transporting heavy, rear mounted equipment.

A—Reflex Reflector
B—Low Beam Headlights
C—High Beam Headlights
D—Work Light
E—Turn Signal Lever
F—SMV Emblem

PY40225 —UN—22FEB17

OOS

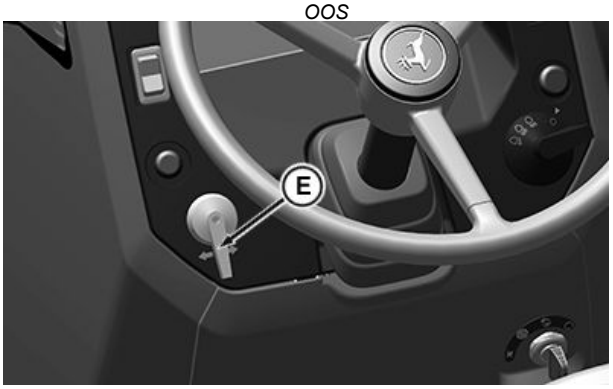

PY40226 —UN—22FEB17

Turn signal lever (OOS)

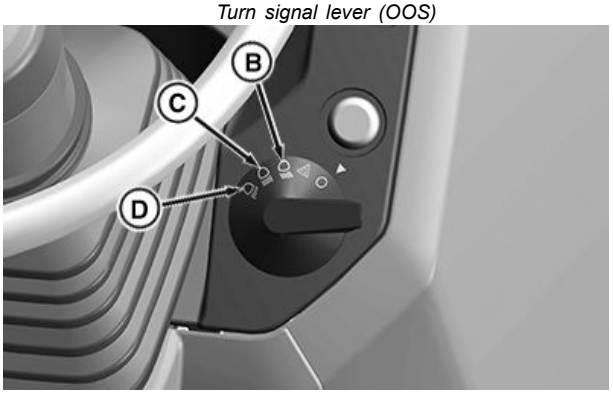

PY39670 —UN—07FEB17

Light switch positions

Continued on next page

RP32883,000032F -19-18JUN19-2/4

Driving on Public Roads — Cab

CAUTION: When transporting on a public road or highway, use accessory lights and devices for the adequate warning to operators of other vehicles. Check local governmental regulations. Various safety devices are available from your John Deere dealer. Keep safety items in good condition. Replace missing or damaged items.

Observe the following precautions when driving tractor on roads:

1. Ballast tractor correctly.
2. **Cab:** Clean windows and adjust rear-view mirrors.
3. Use foot throttle instead of the hand throttle.

CAUTION: Before operating tractor on a road, lock brake pedals together. Use brakes lightly and cautiously at transport speeds.

IMPORTANT: To prevent unnecessary wear, never "ride" the brakes by resting a foot on the pedals.

4. Couple brake pedals together using brake pedal locking bar (A). Avoid hard application of brakes. Reduce speed if towed load weighs more than the tractor and is not equipped with brakes. (Consult implement operator's manual for recommended transport speeds.)

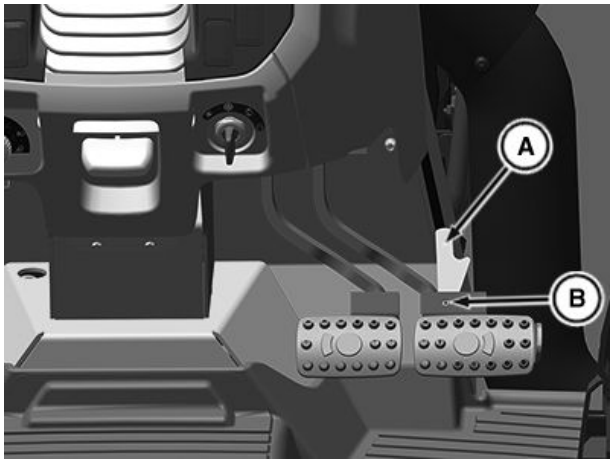

PY40230 —UN—09AUG17

A—Brake Pedal Locking Bar **B—Locking Pin**

Use additional caution when transporting towed loads under adverse surface conditions and when turning or braking on inclines. Be sure that wheel tread is adjusted wide to provide maximum stability.

Continued on next page

RP32883,000032F -19-18JUN19-3/4

5. Check local laws and regulations for lighting requirements. Clean Slow Moving Vehicle (SMV) emblem (A), warning lights (B), and tail/warning lights (C). If towed or rear-mounted equipment obstructs view of safety devices, install SMV emblem and warning lights on equipment. (See your John Deere dealer.)

   A seven-terminal outlet at rear of tractor supplies power to warning lights on towed or rear-mounted equipment. (See description of the outlet in Lights section.)

6. **MFWD (if equipped):** To reduce tire wear, disengage front wheel drive.

7. **Loader Cylinders (if equipped):** Engage transport lock to eliminate possibility of loader movement during transport by inadvertently bumping the multi-function control lever.

8. Rear Hitch: Lock hitch in transport position to eliminate the possibility of lowering an implement during transport by inadvertently bumping the raise/lower lever.

9. Use turn signal lever (D) when turning. Return lever to center position after turning.

10. Turn light switch to position (E).

11. Move switch (F) to low beam position (down) when meeting another vehicle. Never use floodlights or any lights which could blind or confuse other drivers.

12. Drive slowly to maintain safe control. Before descending a hill, shift to a gear low enough to control speed without using brakes. Slow down for rough ground and sharp turns, especially when transporting heavy, rear-mounted equipment.

A—SMV Emblem
B—Warning Lights
C—Tail/Warning Lights
D—Turn Signal Lever
E—Road Lights
F—High/Low Beam Switch

PY17964 —UN—22MAR13

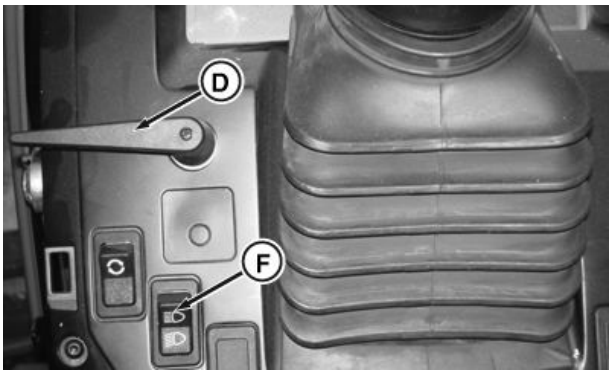

PY15186 —UN—01JUN12

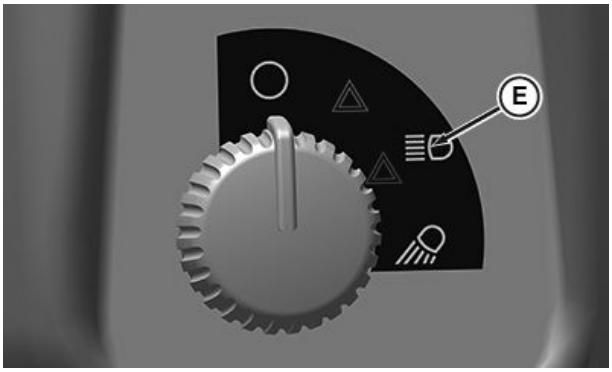

PY40803 —UN—31MAR17

RP32883,000032F -19-18JUN19-4/4

Using Emergency Exit (Cab)

Rear window opening provides a large exit path if, the cab doors or sides of cab are blocked in an emergency situation.

PY40233 —UN—22FEB17

Emergency Exit

VP27597,000035C -19-22FEB17-1/1

Use Caution on Hillsides

OOS: Operate only with the Roll-Over Protective Structure (ROPS) in the UP or extended position whenever possible. Always use your seat belt when the ROPS is in the UP or extended position to minimize chance of injury from an overturn accident.

Avoid holes, ditches, and obstructions which may cause the tractor to tip, especially on hillsides. Avoid sharp, uphill turns.

Never drive near the edge of a gully or steep embankment—it might cave in.

Driving forward out of a ditch or mired condition or up a steep slope could cause tractor to tip over rearward. Back out of these situations if possible.

MFWD (if equipped): While mechanical front wheel drive greatly increases traction, it does not increase the stability of the tractor. With MFWD engaged, the tractor can climb steeper slopes, but does NOT become more stable. When this option is used, extra caution is needed on slopes. Compared to 2-wheel drive, a front-wheel drive tractor maintains traction on steeper slopes, increasing the possibility of a tip-over.

Danger of overturn increases greatly with narrow tread setting, at high speed.

Hitch towed loads only to drawbar. When using a chain, take up the slack slowly.

SD74272,000020C -19-23JUN12-1/1

Operating PowrReverser™ Transmission (If Equipped)

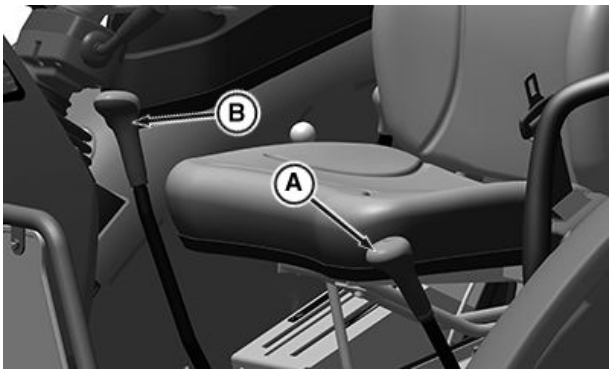

PY40244 —UN—22FEB17

Range and Gear Lever - OOS

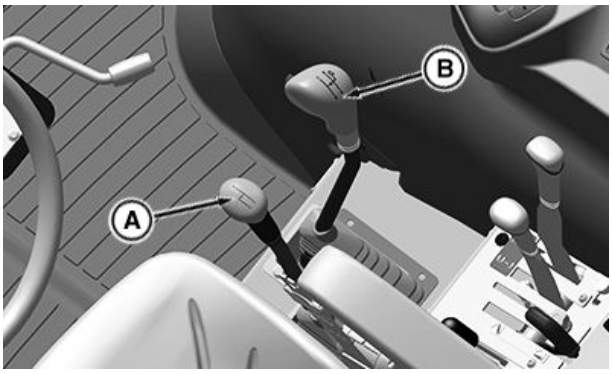

PY40245 —UN—22FEB17

Range and Gear Lever - Cab

PY40242 —UN—22FEB17

Power Reverser Lever - OOS

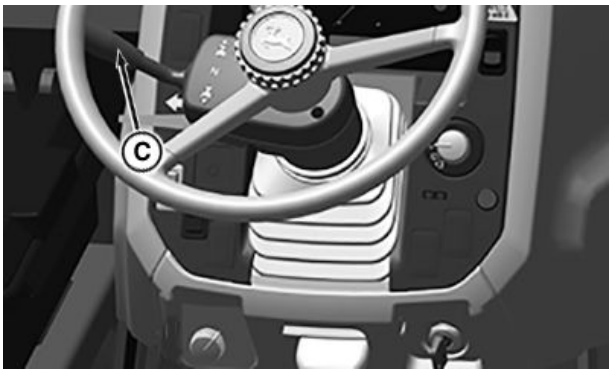

PY40243 —UN—22FEB17

Power Reverser Lever - Cab

A—Range Shift Lever **B—Gear Shift Lever** **C—FNR Lever**

Range shift lever (A) provides three speed ranges: A, B, and C.

Gear shift lever (B) provides four forward and four reverse travel speeds (1, 2, 3, 4).

FNR lever (C) provides travel direction (forward or reverse).

NOTE: The clutch pedal must be fully depressed one time after engine is started.

This is normally done when engaging a speed gear from neutral. When the tractor is started with speed gear engaged (FNR is in neutral), the tractor will not move when the FNR lever is set to F or R, until the clutch pedal has been fully depressed one time.

- Twelve forward and the 12 reverse speeds are available when using range and gearshift levers

IMPORTANT: Top shaft synchronizer works only on speed gears. To prevent transmission damage, do not attempt to change range while in motion. To shift into a different range; stop tractor, depress clutch pedal fully and decrease engine speed.

The clutch pedal must be FULLY depressed in order to make a gear (speed) shift. If the clutch pedal is not fully depressed, the shift lever cannot be moved beyond neutral. Should this occur, depress the clutch pedal further. If the clutch pedal free travel is out of specification, see your John Deere dealer to readjust clutch pedal linkage.

To prevent unnecessary clutch wear, never "ride" the clutch by resting foot on the pedal.

FNR lever: With tractor stopped, select desired travel direction (forward or reverse). Travel direction change can be done without depressing the clutch pedal.

Range Shift: Tractor must come to a **complete stop** when shifting into any speed range.

1. After the tractor has stopped, lower engine rpm to idle speed.
2. Depress clutch pedal FULLY.
3. Select desired speed range (A, B, C).
4. Slowly release the clutch pedal to gradually take up load.
5. Increase engine speed once shift is completed.

Gear (speed) Shift: Changing gears can be made **on-the-go**, without stopping.

1. With the tractor in motion, depress the clutch pedal (C) FULLY.

Continued on next page

VP27597,000035D -19-23FEB17-1/2

2. Select desired speed (1, 2, 3, 4).
3. Slowly release the clutch pedal to gradually take up load.

VP27597,000035D -19-23FEB17-2/2

Operating SyncShuttle Transmission

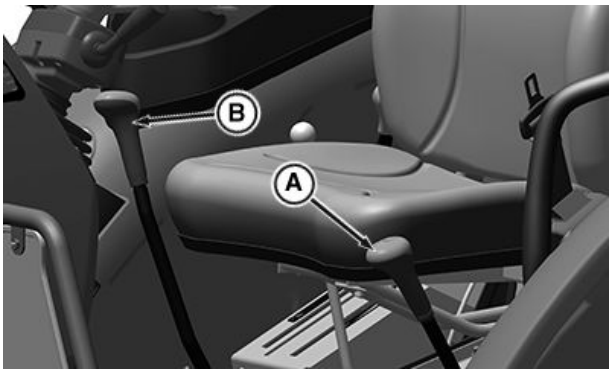

PY40244 —UN—22FEB17

Range and Gear Lever - OOS

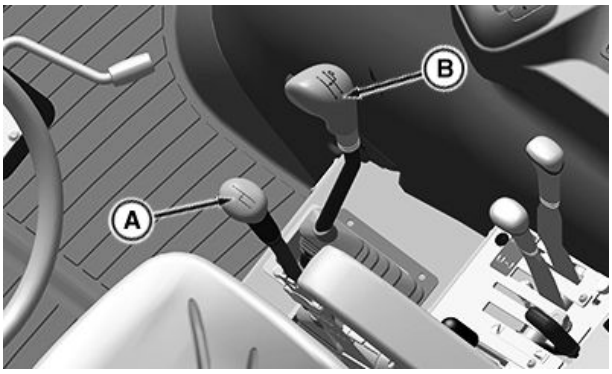

PY40245 —UN—22FEB17

Range and Gear Lever - Cab

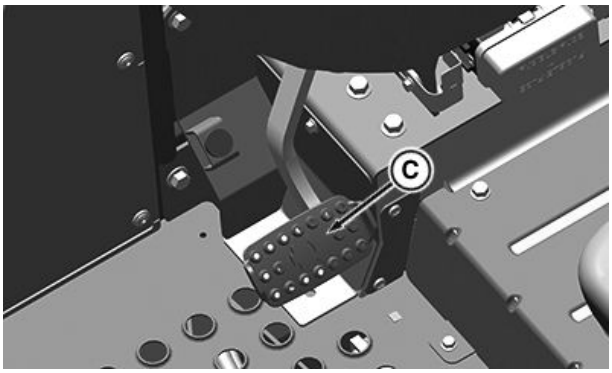

PY40247 —UN—22FEB17

Clutch - OOS

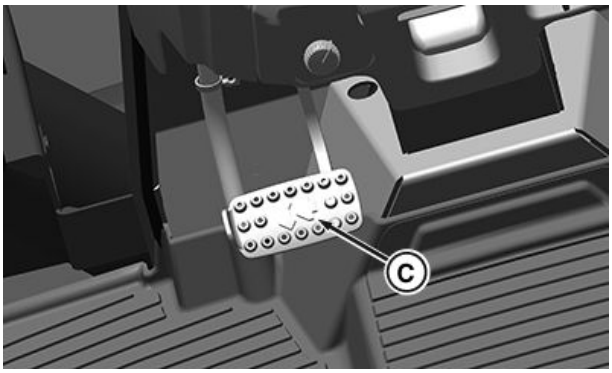

PY40246 —UN—22FEB17

Clutch - Cab

A—Range Shift Lever **B—Gear Shift Lever** **C—Clutch Pedal**

Range shift lever (A) provides three speed ranges: A, B, and C.

Gear shift lever (B) provides three forward and one reverse travel speed (1, 2, 3, R).

- Nine forward speeds are available when using range and gearshift levers
- Three reverse speeds are available when using range shift lever

IMPORTANT: Top shaft synchronizer works only on speed gears. To prevent transmission damage, do not attempt to change range while in motion. To shift into a different range; stop tractor, depress clutch pedal fully and decrease engine speed.

The clutch pedal must be FULLY depressed in order to make a gear (speed) shift. If the clutch pedal is not fully depressed, the shift lever cannot be moved beyond neutral. Should this occur, depress the clutch pedal further. If the clutch pedal free travel is out of specification, see your John Deere dealer to readjust clutch pedal linkage.

To prevent unnecessary clutch wear, never "ride" the clutch by resting foot on the pedal.

Range Shift: Tractor must come to a **complete stop** when shifting into any speed range.

1. After the tractor has stopped, lower engine rpm to idle speed.
2. Depress clutch pedal FULLY.
3. Select desired speed range (A, B, C).
4. Slowly release the clutch pedal to gradually take up load.
5. Increase engine speed once shift is completed.

Gear (speed) Shift: Changing gears can be made **on-the-go**, without stopping.

1. With the tractor in motion, depress the clutch pedal (C) FULLY.
2. Select desired speed (1, 2, 3, R).
3. Slowly release the clutch pedal to gradually take up load.

VP27597,000035E -19-23FEB17-1/1

Using Infinitely Variable Shuttle (If Equipped)

Infinitely variable shuttle (A) adjusts load take-up and acceleration when making directional changes with PowrReverser™ lever during repetitive cycle work (loader operation).

In full left (counterclockwise) position (shown) load take-up and acceleration ramp-up are slow to respond.

When operating with high load and ballast, turn control knob clockwise to speed-up acceleration and load take-up response.

IMPORTANT: When operating in full right (clockwise) position on concrete or paved surfaces, premature tire wear can occur.

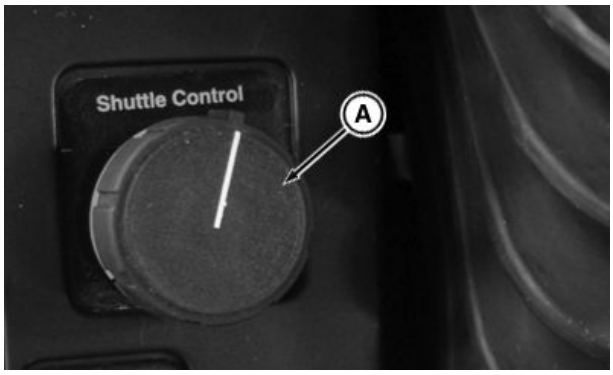

PY16343 —UN—11SEP12

A—Variable Shuttle

SD74272,0000235 -19-11SEP12-1/1

Selecting a Gear

IMPORTANT: To extend drivetrain life and avoid excessive soil compaction and rolling resistance when using ballast, operate one gear lower than normal.

The tractor may be operated in any gear with engine speeds between 1588 rpm and 2083 rated engine rpm.

Within these limits, the engine can be put under full load. For light load operation, use a higher gear and lower engine speed. This saves fuel and reduces wear.

Ground Speed Estimates for the different tire sizes are located in Specifications section.

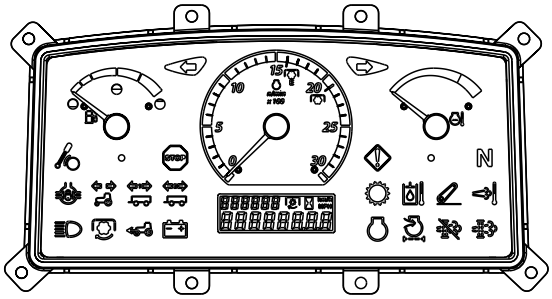

PY40232 —UN—22FEB17

VP27597,0000360 -19-28MAR17-1/1

Using Brakes

CAUTION: Before operating the tractor on a road, lock the pedals together. Use brake lightly and cautiously at transport speeds.

Use individual brakes to assist in making sharp turns. remove the locking pin (B) and disengage brake pedal locking bar (A) and depress only one brake pedal.

To stop the tractor, depress both brake pedals.

IMPORTANT: To prevent unnecessary wear, never ride the brakes by resting a foot on the pedals.

Reduce speed if towed load is not equipped with brakes and weighs more than the tractor. Avoid hard braking applications. Consult implement operator's manual for recommended transport speeds.

Use additional caution when transporting towed loads under adverse conditions, when turning or stopping on inclines.

A—Brake Pedal Locking Bar **B— Locking Pin**

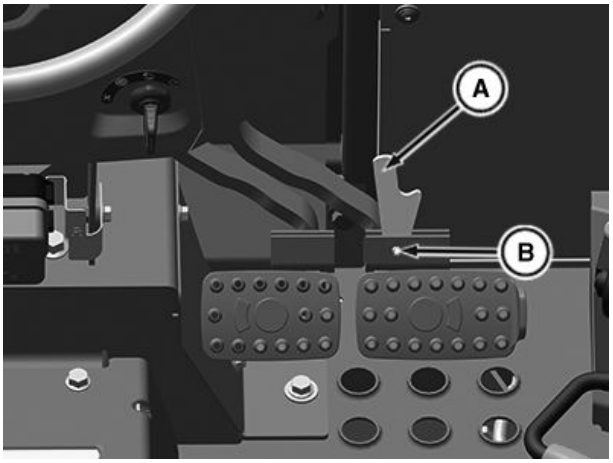

PY44282 —UN—09AUG17

OOS

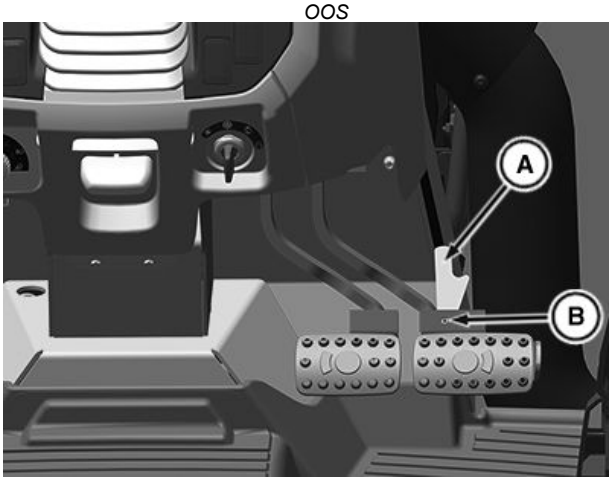

PY40230 —UN—09AUG17

Cab

VP27597,0000361 -19-12JUL17-1/1

Use Differential Lock

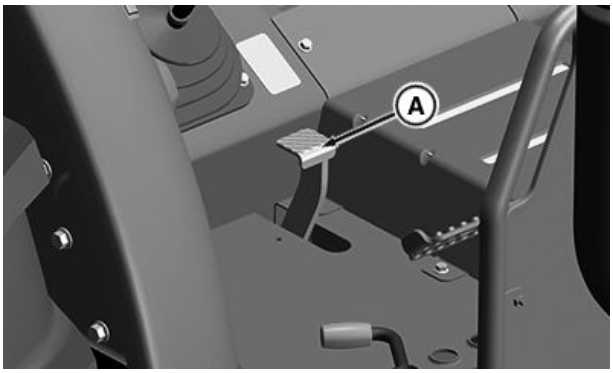

PY40250 —UN—23FEB17

Differential Lock - OOS

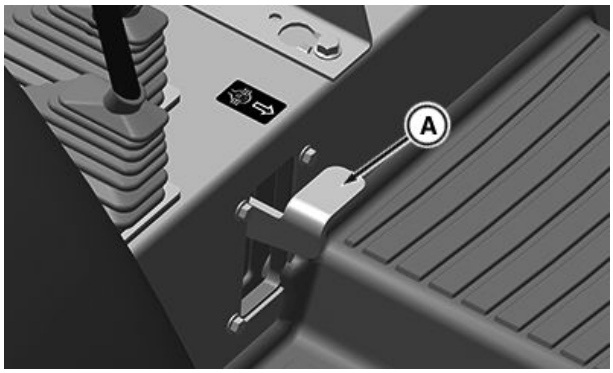

PY40251 —UN—23FEB17

Differential Lock - Cab

A—Differential Lock Pedal

CAUTION: Do not operate the tractor at high speed or attempt to turn with the differential lock engaged.

IMPORTANT: To prevent damage to drivetrain, do not engage differential lock when one wheel is spinning and the other is stopped.

When one wheel starts to lose traction, engage differential lock by depressing pedal (A) down. Tractor wheels must be turning before engaging differential lock. If possible, engage differential lock before entering conditions where tires may slip.

Unequal traction keeps the lock engaged. When traction equalizes, lock disengage itself by spring action. If lock does not disengage, depress one brake pedal and then the other.

If tires repeatedly slip, then get traction, and then slip again, hold pedal in the engaged position.

VP27597,0000362 -19-23FEB17-1/1

Operating Mechanical Front Wheel Drive (If Equipped)

Use mechanical front wheel drive (MFWD) as required for better traction.

CAUTION: Mechanical front wheel drive greatly increase traction. When this option is used, extra caution is needed on slopes. Compared to 2-Wheel drive, a mechanical front wheel drive tractor maintains traction on steeper slopes. Increase the possibility of a tip over.

When driving on icy, wet, or graveled surfaces, reduce speed and be sure that the tractor is properly ballasted to avoid skidding and loss of steering controls, engage mechanical front wheel drive.

IMPORTANT: To extend tire life engage mechanical front heel drive when needed . DO NOT engage when driving on hard surfaces.

DO NOT install tire chains on the tractor front wheels, chains strike, and damage the tractor.

To prevent transmission damage, DO NOT engage or disengage mechanical front wheel drive on the go.

While towing down an implement and pushing MFWD lever to disengage, lever may resist to disengage MFWD. When this occurs, the load must be relieved first from the power train. See step 3.

Front-wheel drive may be engaged and disengaged while in motion

1. To engage, pull up on MFWD lever (A).
2. To disengage, push lever back down.
3. If the lever not goes down easily, that means the load must first be relieved from the power train. Operator may push down on lever while doing one of the following in order to relieve load:

- Reduce speed and drive tractor straight ahead at for a few feet.
- Stop tractor, then operate in reverse direction for a short distance, if changing from a forward direction.

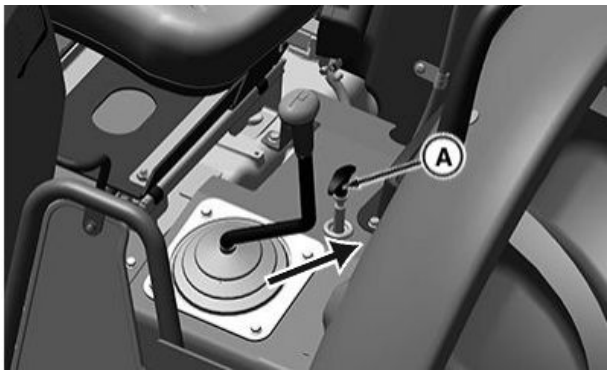

OOS

PY41983 —UN—18SEP17

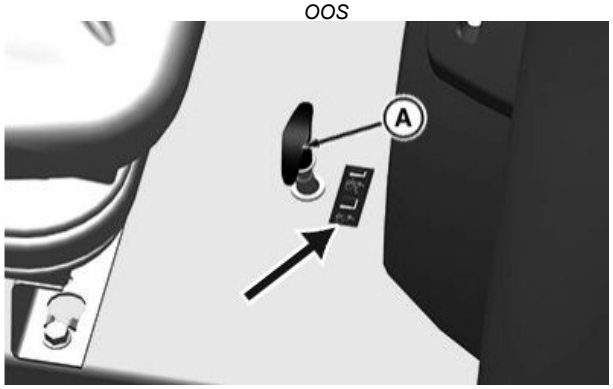

Cab

PY41984 —UN—18SEP17

MFWD Label

PY41985 —UN—18SEP17

A—MFWD Lever

VP27597,0000363 -19-18SEP17-1/1

Stopping Tractor (PowrReverser)

PY40234 —UN—20JUL17

Hand Throttle - OOS

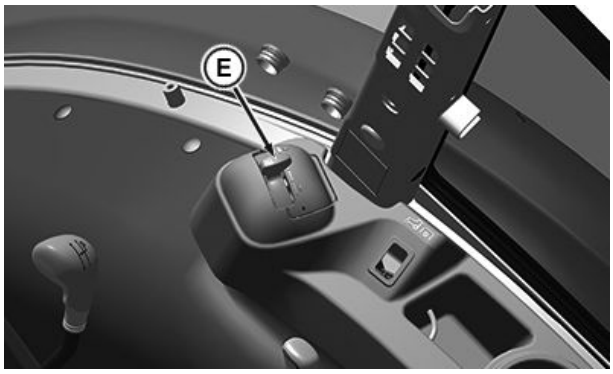

PY40235 —UN—22FEB17

Hand Throttle - Cab

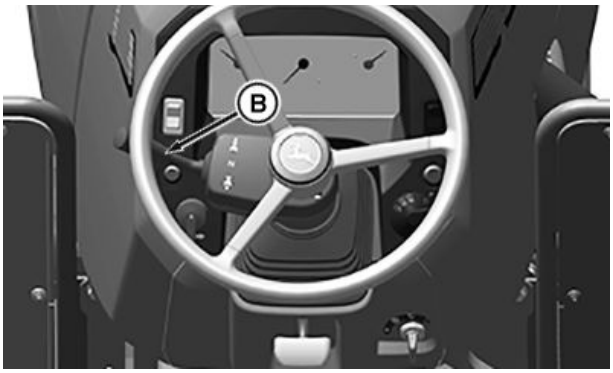

PY40240 —UN—22FEB17

Power Reverser Lever - OOS

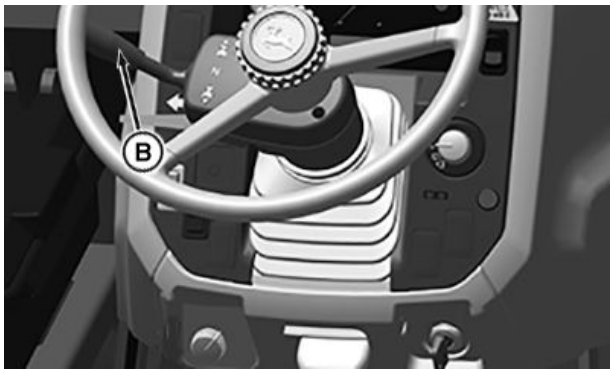

PY40241 —UN—22FEB17

Power Reverser Lever - Cab

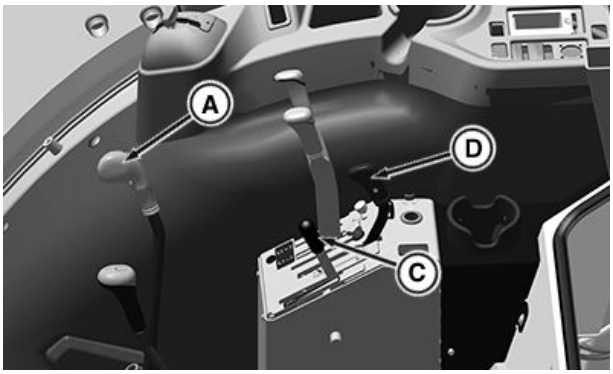

PY40236 —UN—22FEB17

Lever - Cab

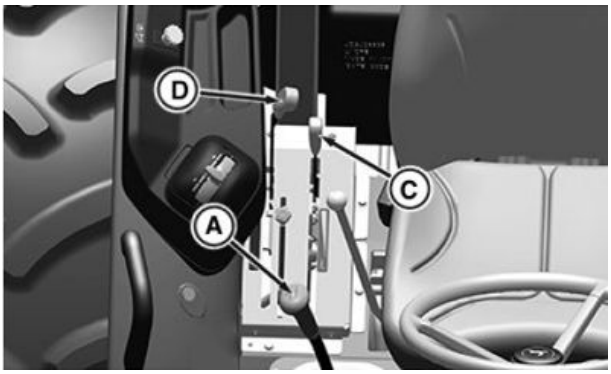

PY41789 —UN—20JUL17

Lever - OOS

A—Gear Shift Lever
B—PowrReverser™ Lever
C—Draft Control Lever
D—Position Control Lever
E—Hand Throttle

1. Stop tractor travel by depressing on clutch pedal first or while using the brakes.
2. Put gearshift lever (A) or PowrReverser lever (B) (if equipped) in NEUTRAL before or while using the brakes.

IMPORTANT: Cooling of the certain engine parts is provided by engine oil. Stopping a hot engine suddenly could cause damage to these parts by overheating or lack of lubrication.

3. Pull hand throttle (E) down to low idle position. Allow engine to idle for 1—2 minutes.
4. Lower all equipment to ground using position control lever (C and D).
5. Put all SCV levers in NEUTRAL.
6. Disengage PTO.

CAUTION: To prevent the operation of tractor by untrained person, remove the key from the ignition switch.

Continued on next page

VP27597,0000364 -19-20JUL17-1/2

7. Turn key to STOP position and remove from switch.

VP27597,0000364 -19-20JUL17-2/2

Stopping Tractor (SyncShuttle)

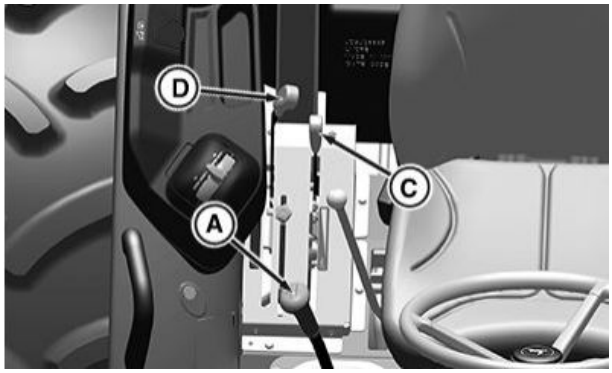

PY40568 —UN—20JUL17

Power Reverser Lever - OOS

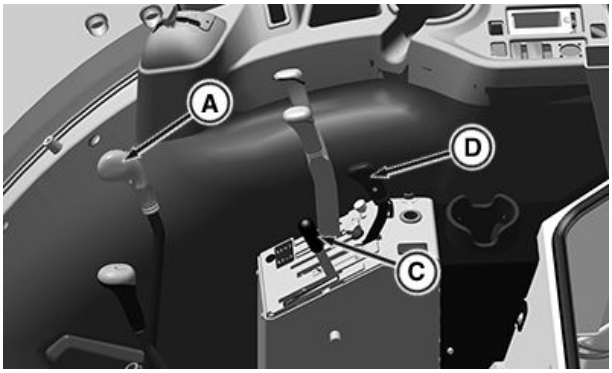

PY40236 —UN—22FEB17

Power Reverser Lever - CAB

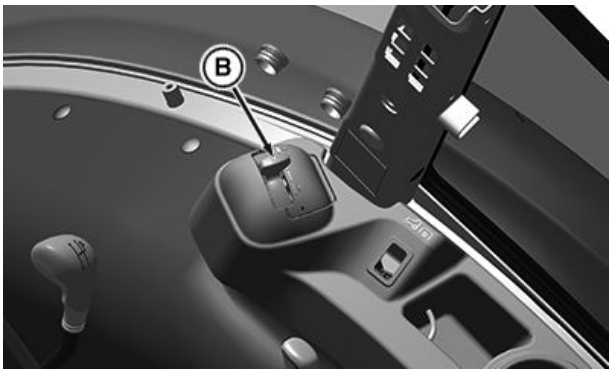

PY40239 —UN—22FEB17

Hand Throttle - Cab

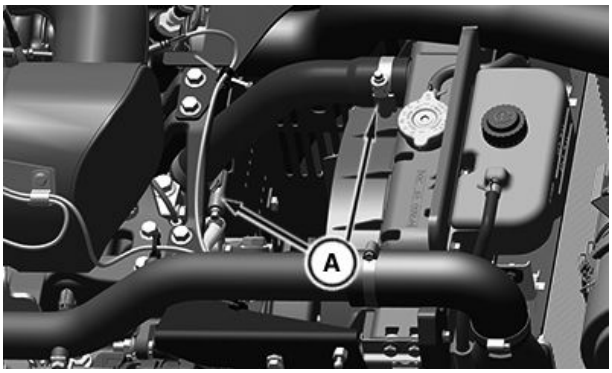

PY40569 —UN—02AUG17

Hand Throttle - OOS

A—Gear Shift Lever
B—Hand Throttle
C—Draft Control Lever
D—Position Control Lever

1. Stop tractor travel by depressing on clutch pedal first or while using the brakes.
2. Put gearshift lever (A) in NEUTRAL before or while using the brakes.

IMPORTANT: Cooling of the certain engine parts is provided by engine oil. Stopping a hot engine suddenly could cause damage to these parts by overheating or lack of lubrication.

3. Pull hand throttle (B) down to low idle position. Allow engine to idle for 1—2 minutes.
4. Lower all equipment to ground using position control lever (C and D).
5. Put all SCV levers in NEUTRAL.
6. Disengage PTO.

CAUTION: To prevent the operation of tractor by untrained person, remove the key from the ignition switch.

7. Turn key to STOP position and remove from switch.

VP27597,0000365 -19-20JUL17-1/1

Come-Home Mode

CAUTION: When driving tractor in come-home mode, do not exceed tractor limited capability.

Come-home mode may be used if tractor becomes inoperable due to failures and must be moved. While in come-home mode, engine speed is limited to 1500 rpm.

1. Turn key switch to START position.
2. Press and hold roll mode switch (A) for 5 seconds to display first control unit screen.
3. Stored diagnostic trouble codes (DTC) appear on instrument cluster control (ICC) LCD display (C). If codes appear, record the code information.
4. Move turn signal switch (B) to right-hand side to scroll and select PTR.
5. Press and release the roll mode switch (A) to enter PTR address space.
6. Use repeated cycles of the turn signal switch (B) to right-hand side to scroll the address 100 (diagnostic address).
7. Press and release roll mode switch to enable the data entry.
8. Press and release roll mode switch (A) repeatedly to select correct digit on LCD display (C).
9. Move turn signal switch (B) to right-hand side to change 0 to 1.
10. Press and release roll mode switch (A) to save the data entry.
11. Stand up off the seat and then sit back down. There must be an active code for PTR523966.31 – come home mode detected. The throttle must be limited to 1500 rpm.
12. Step on brake pedal momentarily.

CAUTION: Before operating tractor verify correct operation of steering and brakes. In some situations braking may require additional force due to lower hydraulic pressure.

13. Move range shift lever in A range and gearshift lever in first gear, depress clutch pedal and put the Forward, Neutral, Reverse lever in FORWARD.
14. Release clutch pedal, there must be a 3-4 seconds delay and clutch must slowly engage.

NOTE: Come home mode deactivate, if the ignition off. Perform the same procedure for activation of come home mode.

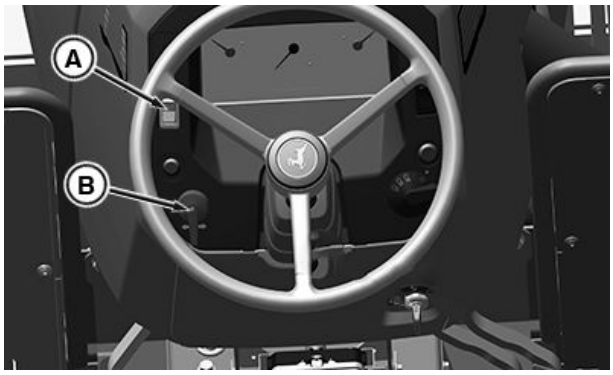

APY33269 —UN—01APR20

OOS Shown

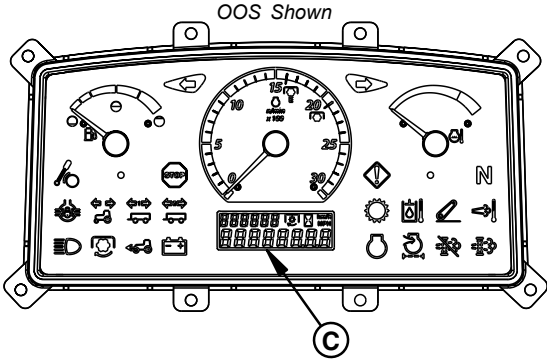

APY35461 —UN—18APR20

A—Roll Mode Switch
B—Turn Signal Switch
C—LCD Display

VP52664,0000676 -19-18APR20-1/1

Match Tractor Power to Implement

IMPORTANT: Tractor power must match the size of certain implements. Excessive power can damage an implement, and too large an implement can damage the tractor. (Refer to implement operator's manual for minimum and maximum power requirements before attaching an implement.)

PY00013,0000003 -19-17MAR20-1/1

3-Point Hitch Components

A—Lift Arms
B—Lift Links
C—Sway Chains/Sway Bars
D—Draft Links
E—Center Link

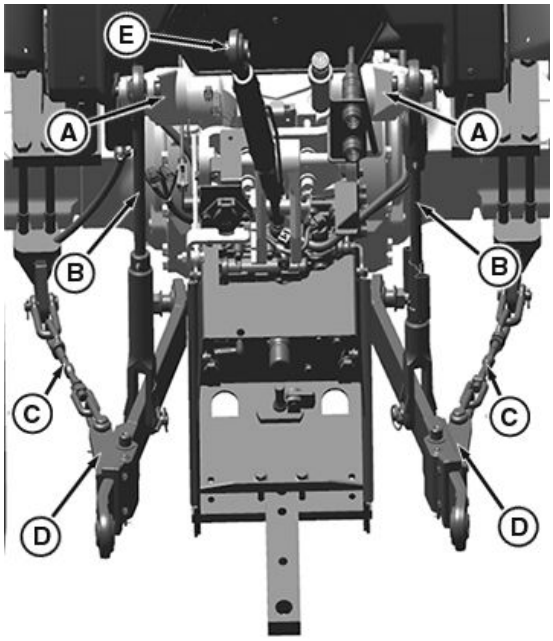

PY37350 —UN—16FEB17

3 - Point Hitch with Sway Chains

MD36154,00001C7 -19-06APR17-1/1

Rockshaft Control Levers

The rockshaft position is controlled by two levers, the position control lever (A) and the draft control lever (B).

The rockshaft position control lever (A) raises the hitch when pulled rearward, and lowers the hitch when moved forward. (See Use Position Control in this section for more information.)

The draft control lever (B), controls hitch position relative to draft loads. (See Use Draft Control in this section for more information.)

A—Position Control Lever **B—Draft Control Lever**

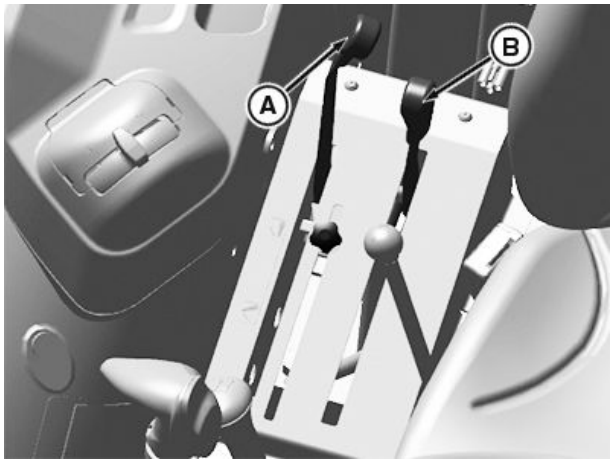

PY37340 —UN—16FEB17

Control levers for OOS

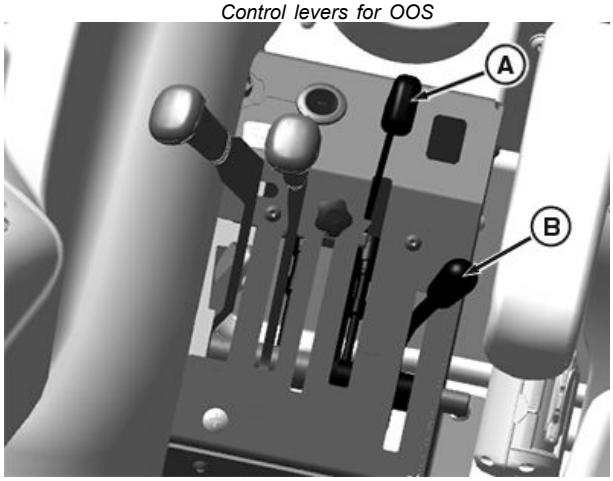

PY37341 —UN—16FEB17

Control levers for Cab

MM12389,0000037 -19-15FEB17-1/1

Setting Position Control Lever Stop

NOTE: Position control lever stop is used when operating depth or height needs to be repeated often.

1. Operate implement for a few minutes to determine proper depth or height.
2. Loosen lever stop (A), and slide against position control lever. Lock stop in position by turning in a clockwise direction. Rockshaft will now lower to same position each time control lever is pushed forward to the stop.

A—Lever Stop

PY37342 —UN—16FEB17

OOS

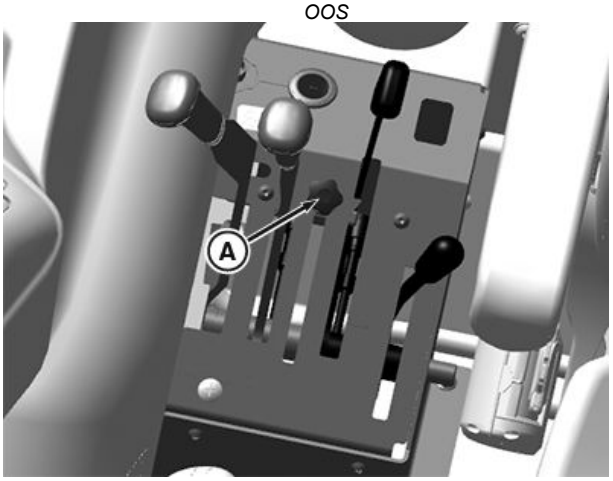

PY37343 —UN—16FEB17

Cab

MM12389,0000038 -19-15FEB17-1/1

Using Rockshaft Position Control

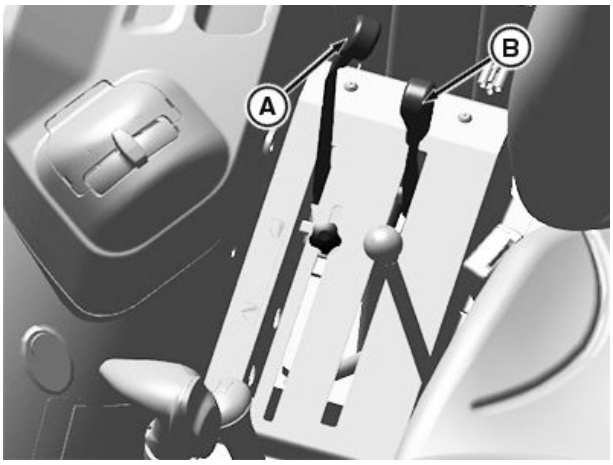

PY37340 —UN—16FEB17

Control Levers of OOS

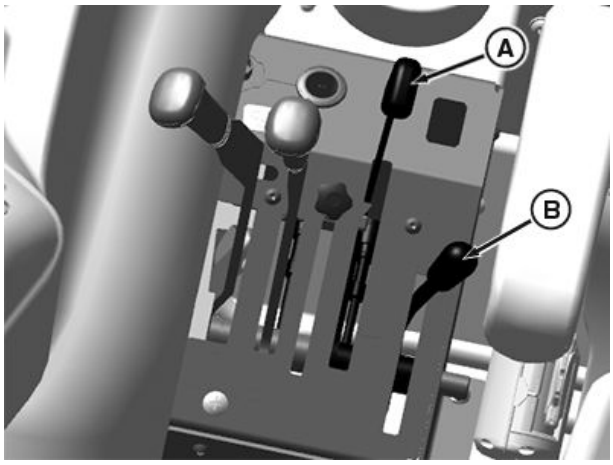

PY37341 —UN—16FEB17

Control Levers of Cab

CAUTION: To prevent unexpected movement of rockshaft, place draft control lever (B), in a full forward position before attaching an implement.

Put draft control lever (B), forward when you DO NOT want rockshaft to adjust automatically to draft load, such as attaching implement to tractor.

Use position control lever (A) to control hitch movement and depth. Position control should be used for the following applications:

TRANSPORT of implements and end of field turn-around. Position control lever should be moved fully rearward (C) for transport for both load and non-load sensing usage.

CONSTANT DEPTH of implements on level terrain and for non- ground engaging implements such as spreaders or sprayers. Place position control lever at depth desired (D).

FLOAT operation for implements with skids or depth gauge wheels designed to carry full implement weight. Push both levers all the way forward (E) so implement can follow the ground contour.

NOTE: Lift links can be adjusted for implement float. (See ADJUSTING IMPLEMENT FLOAT in this section.)

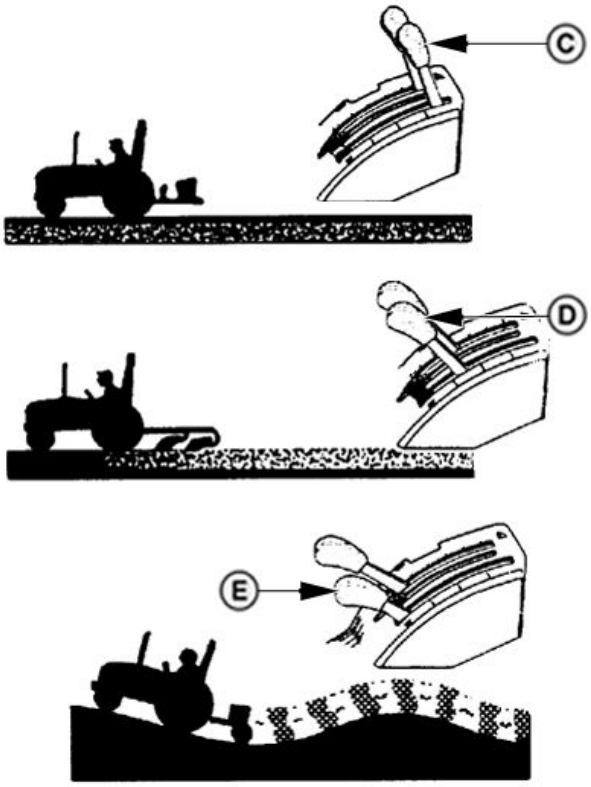

PY18781 —UN—17SEP13

A—Position Control Lever
B—Draft Control Lever
C—Position Control Lever In Rearward Position
D—Position Control Lever In Desired Depth Position
E—Position Control Lever And Draft Control Lever In Float Position

MM12389,0000039 -19-15FEB17-1/1

Using Draft Control

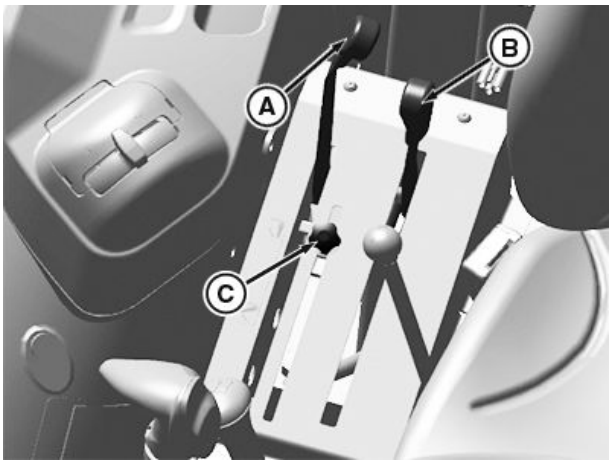

PY37344 —UN—16FEB17

Control Levers of OOS

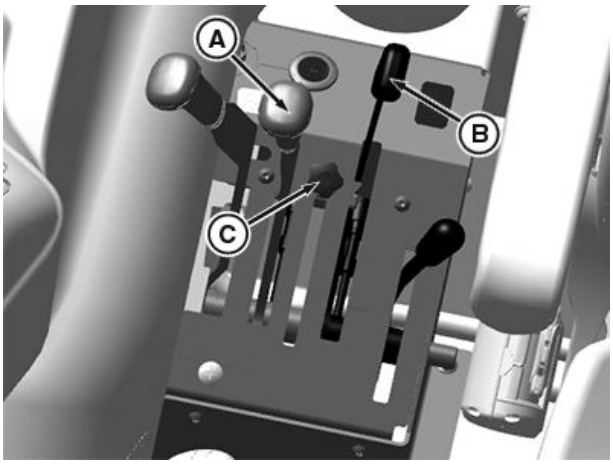

PY37345 —UN—16FEB17

Control Levers of Cab

A—Position Control Lever **B—Draft Control Lever** **C—Position Control Lever Stop**

The rockshaft is equipped with variable draft control system.

Use draft load sensing when:

- Operating with a fully mounted implement in hill and swale terrain. The implement will rise and lower to follow the ground contours while maintaining a nearly constant depth.
- Operating in varying soil conditions. The implement is raised slightly to get through tough spots so you do not have to shift to a lower gear.

Draft control lever (B) controls amount of load required before hitch responds. With lever placed fully forward to the position marked “OFF” (C), there is no draft sensing. Placing the lever toward the rear position reduces the amount of draft load required to override the position setting set by the position control lever (A) and raise the rockshaft.

Draft sensitivity ranges can be changed by repositioning the center link. (See Position Center Link in this section for additional information.)

For draft load sensing operation:

- Initially place position control lever (A) in its fully rearward position and the draft control lever (B) in the fully forward (least draft) position.
- With tractor moving, push position control lever (A) forward to set implement operating depth. Set position control lever stop (D) so control lever can be brought back to the same position. The operating depth set-up will prevent the rockshaft from lowering all the way when the tractor begins to slip. Then pull draft sensing lever (B) rearward until desired draft sensing sensitivity is obtained.
- The position control lever (A) can also be raised slightly to override the draft control setting to help get through slippery spots without getting stuck.
- The position control lever (A) can be moved fully rearward to raise the hitch at the end of the field.

MM12389,000003A -19-15FEB17-1/1

Adjusting Rockshaft Rate-of-Drop/ Implement/ Transportation Lock

CAUTION: Excessive rate-of-drop may cause damage or injury. Fully lowering implement should require at least two seconds.

Rockshaft drops faster when a heavy implement is attached. Adjust rate-of-drop knob so that it is slow enough to be safe and prevent implement damage.

Turn rate-of-drop knob (A), located under the seat, clockwise to slow rockshaft drop.

Turn knob counterclockwise to increase rate-of-drop.

Rate-of-drop knob is also called implement lock. When knob is fully screw in, implement will not lower down even if position control lever is fully down. Use implement lock while transporting implement.

A—Rate-Of-Drop Knob/ Implement Lock

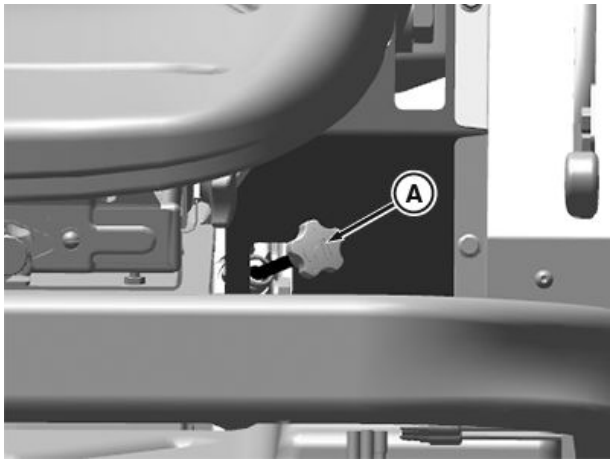

PY37346 —UN—16FEB17

OOS

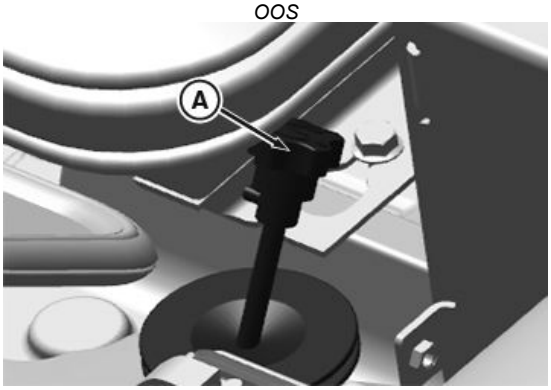

PY37347 —UN—16FEB17

Cab

MM12389,000003B -19-15FEB17-1/1

Prepare Implement

IMPORTANT: When attaching Category I implements to the tractor , sway chains/ stabilizer bar need lengthening to prevent binding and limiting full raise of the hitch. (See Adjust Hitch Side Sway in this section.)

Category I three Point Hitch is narrower and is used on smaller implements than Category II implements. Refer to the following chart to identify implement category.

Category II implements have the top hole of the implement mast located 610 mm (24 in) above the lower pins. Drill another hole in top mast or extend top mast if necessary.

Category	Mast Height	Width Between Lower Pins	Pin Size (Diameter)	
			Lower	Upper
I	457 mm (18 in)	682.6 mm (26-7/8 in.)	22 mm (7/8 in)	19 mm (3/4 in)
II	610+/-1.5 mm (24 in)	824 mm (32-7/16 in.)	28.7+0.3 mm (1-1/8 in.)	25.5 mm (1 in)

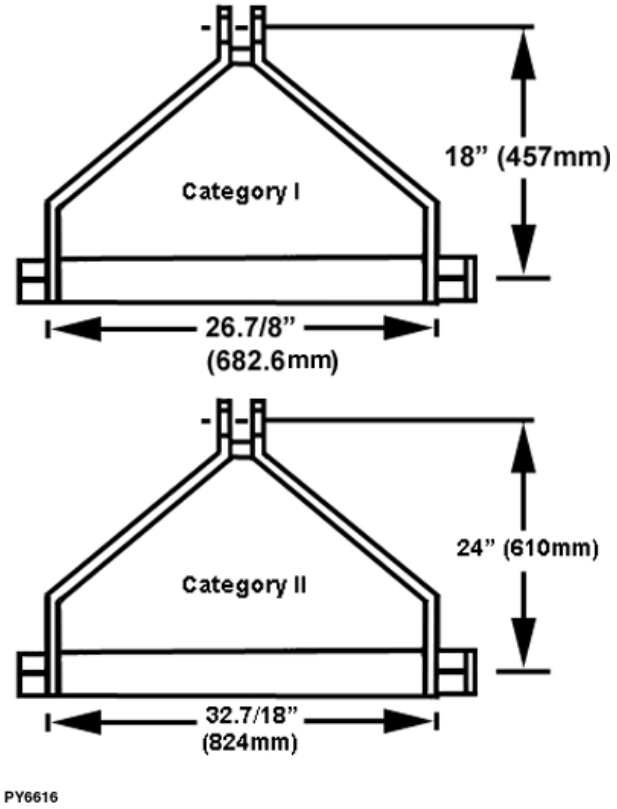

SA61034,0000209 -19-18MAR20-1/1

Convert Category II Hitch to a Category I (If Equipped)

Center link end is sized for Category II implement attaching pin.

If Category I implements are to be used, the Category II hitch can be converted as follows:

1. Insert draft link bushing (B), to the center link end. Smaller implement mast pin (A) is also needed while installing center link bushing.
2. Rotate draft link ball (C) in draft link ends to fit over implement pins.

NOTE: The image representation is given only for draft link same bushing required to install in the center link.

See nearest John Deere dealer for parts.

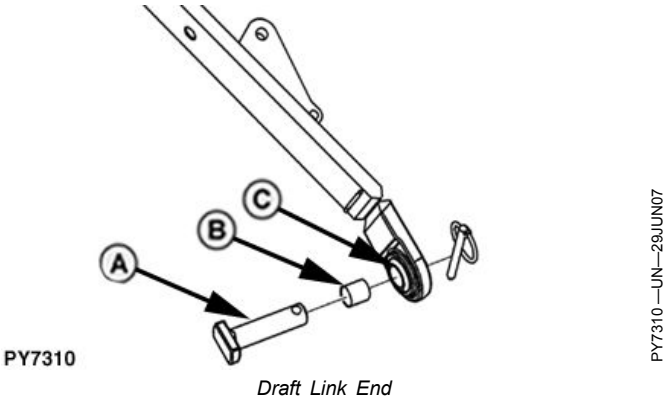

Draft Link End

A—Mast Pin
B—Draft Link Bushing
C—Draft Link Ball

SA61034,000020A -19-18MAR20-1/1

Position Center Link

The draft sensing center link attaching bracket has holes which allow three different positions for attaching the center link. The position affects the draft sensing sensitivity.

Standard position is (C).

Move the center link attachment to holes (B) if:

- Excessive hitch activity or hunting occurs in draft control operation.
- The rear of the implement raises too much when lifted. The implement weight which can be lifted is reduced slightly with the center link attachment in the lower holes.
- The draft control lever range is too small.

Move the center link attachment to holes (C) if:

- The hitch seems unresponsive in draft control operation and allows the engine speed to drop too far before raising the rockshaft.
- The rear of the implement droops and drags the ground as the implement is lifted.

Upper hole (A) eliminates nearly all draft sensing.

NOTE: Implements with Category I mast height 457 mm (18 in) is normally used for upper two attaching holes.

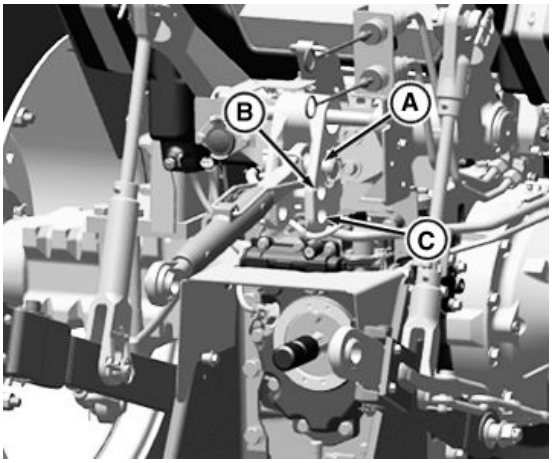

PY41506 —UN—06APR17

A—Upper Hole
B—Middle Hole
C—Lower Hole

Implements with Category II mast height 610 mm (24 in) is normally used for upper two attaching holes.

MD36154,00001C8 -19-06APR17-1/1

Attach Implements to 3-Point Hitch

Fixed Draft Links

1. Be sure drawbar will not interfere. If necessary, move drawbar ahead, or remove it. Check for any other potential interference.

CAUTION: Prevent unexpected movement of rockshaft by placing draft sensing lever in the forward or OFF position before attaching implement to hitch.

2. Back tractor up to implement (A) so that hitch points align. Engage parking brake and stop the engine Before leaving the tractor seat.
3. Slip draft links over implement hitch pins (B), and retain with quick-lock pins.

NOTE: Locking pins can be stored on draft links (through holes in sway chain ears) when not in use.

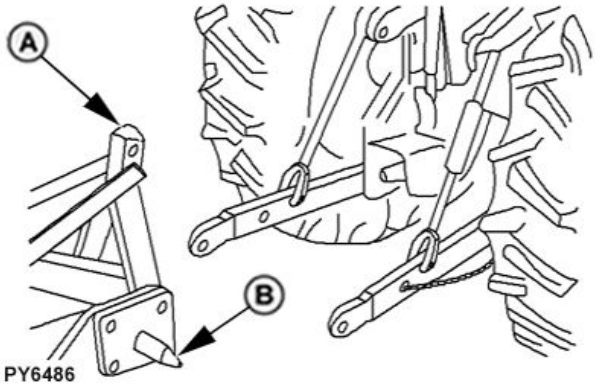

PY6486 —UN—13MAR07

A—Implement
B—Implement Hitch Pins

Continued on next page

MM12389,000003D -19-17FEB17-1/4

4. To remove center-link from transport hook, lift center link locking clip (A) and rotate tab (B) to rear of center link clip.
5. Attach center link to implement top mast.
6. Adjust center link and lift links as necessary. (See Level the Hitch in this section.)

A—Center Link Locking Clip **B—Tab**

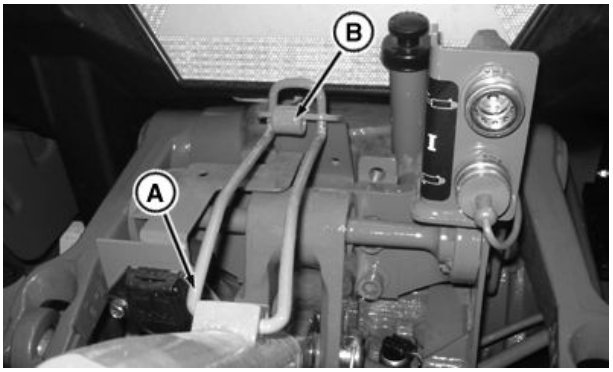

PY17662 —UN—21DEC12

MM12389,000003D -19-17FEB17-2/4

CAUTION: To avoid bodily injury or machine damage whenever an implement, implement quick coupler, or other attachment is connected to the tractor 3-Point Hitch, check full range of operation for interference, binding or PTO separation.

7. Using position control lever (A), lower and raise implement slowly and check for any point of interference.

A—Position Control Lever

PY37348 —UN—16FEB17

OOS Only

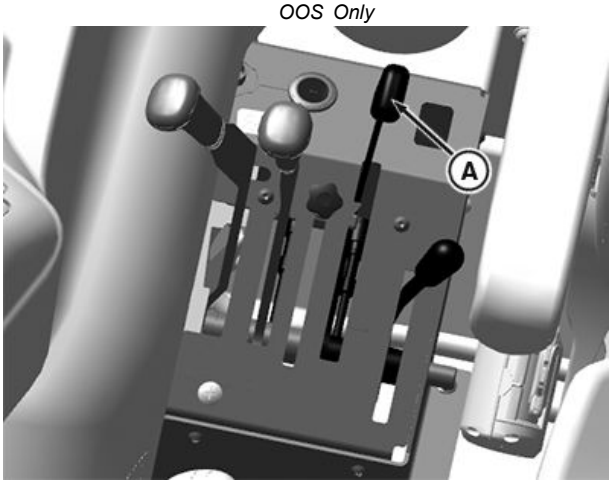

PY37349 —UN—16FEB17

Cab Only

Continued on next page

MM12389,000003D -19-17FEB17-3/4

Attaching Implement with Telescoping Draft Links

1. Position tractor in line with hitch points. Back tractor up close to implement. Place transmission in PARK and stop engine.
2. Move button (A) toward center of tractor and pull out draft link end (B). Slip draft link end over the implement hitch pin. Retain with quick-lock pin. Repeat on the other side.
3. Raise or lower draft arms (C) to align ends (B) with arms, then slowly back up tractor to lock ends in place.
4. Perform steps 4—7 from previous procedure (fixed draft links).

A—Button
B—Draft Link End
C—Draft Arms

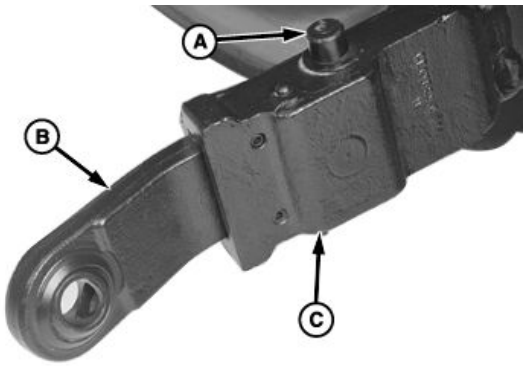

LV9643 —UN—11AUG04

Link End—Full In

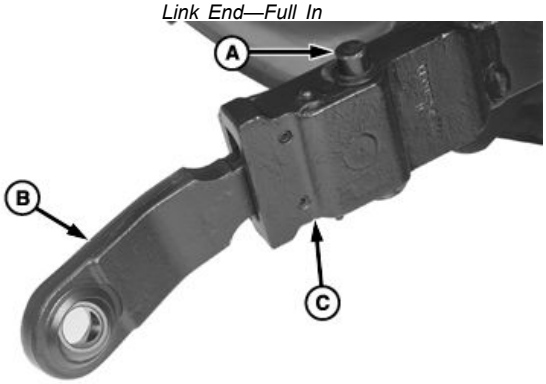

LV9644 —UN—11AUG04

Link End—Mid-Point

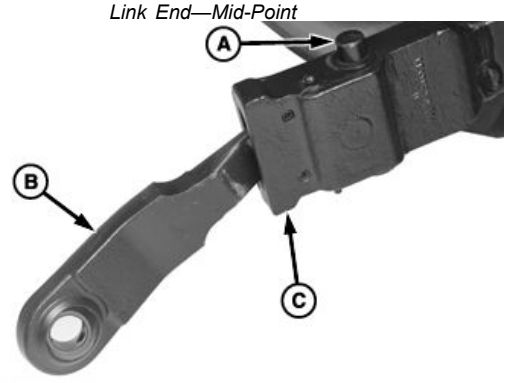

LV9645 —UN—11AUG04

Link End—Full Out

MM12389,000003D -19-17FEB17-4/4

Adjust Hitch Side Sway

NOTE: Check implement operator's manual for instruction on whether to allow side sway.

IMPORTANT: DO NOT shorten chains so short that they do not allow hitch to be raised completely. If chain prevents hitch from raising, hydraulic relief valve will open, causing excessive oil heating, pump damage or equipment damage.

NOTE: Use spring or rubber strap to keep draft links out of rear tires when draft links are not attached to implement.

Implement side sway should be adjusted when the rockshaft is raised for transport by loosening the jam nut on the threaded link (B) and turning the center rod to increase or decrease the length of chain. Tighten jam nut again when adjusted.

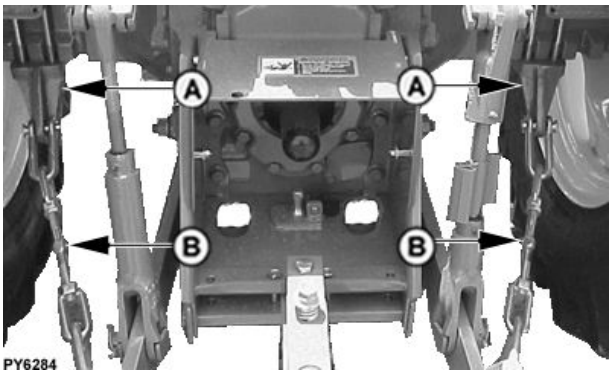

PY6284 —UN—10OCT06

A—Stabilizer Bracket **B—Threaded link**

SD74272,0000306 -19-11SEP12-1/1

Adjust Hitch Side Sway Bar (If Equipped)

NOTE: Check implement operator's manual for instruction on whether to allow side sway.

1. If sway is desired, install pin (A) in any of desired fixed position hole (F), ensuring it goes through sway position inner slot (C).
2. If sway is not desired, move draft link (E) to desired position. Install pin (A) in fixed position hole (F) that lines up with one of the inner fixed position holes (B) (not slot) of the inner sliding member (D).
3. Adjust opposite side sway bar to same position.

A—Pin
B—Inner Fixed Position Holes
C—Sway Position Inner Slot
D—Inner Sliding Member
E—Draft Link
F—Fixed Position Holes
G—Stabilizer

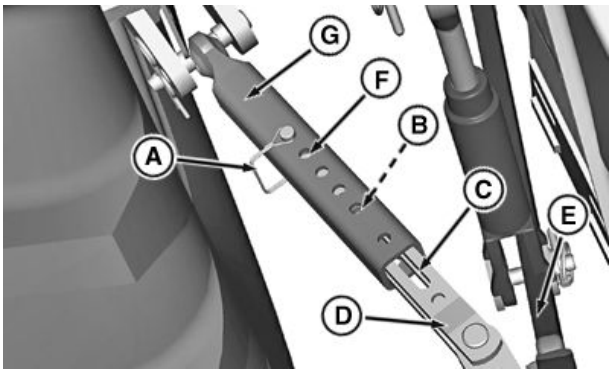

PY18421 —UN—10JUN14

Sway Bar Pin in Sway Position

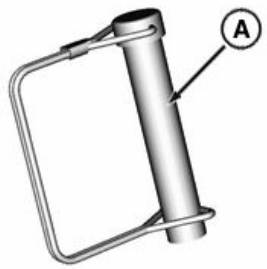

PY18422 —UN—17JUN14

Pin

SD74272,0000016 -19-10JUN14-1/1

Leveling Hitch

1. Lower implement to take weight off hitch.

IMPORTANT: DO NOT attempt to overextend center link beyond limits of locking clip or lift links past the stops. Link body threads could be damaged.

NOTE: Maximum adjustment range of the center link can only be obtained if the ends are positioned equally within the body when attached to an implement.

2. Adjust center link to level implement front-to-rear. Unlatch locking clip (A). Rotate center link body (B) clockwise to lengthen center link or counterclockwise to shorten it. Be sure to latch the locking clip.
3. Adjust right-hand link to level implement side-to-side. Lift locking handle (C) and turn 1/4 turn to engage slot (D) onto roll-pin in the center portion of the lift link.

   Turn crank handle (C) clockwise to raise draft link.

   Turn crank handle (C) counterclockwise to lower draft link.

   After adjustment, lift handle (C) and turn to engage slot (D) onto the lower body to prevent change of adjustment during operation.
4. The left-hand lift link is also adjustable in length to accommodate different tire sizes.

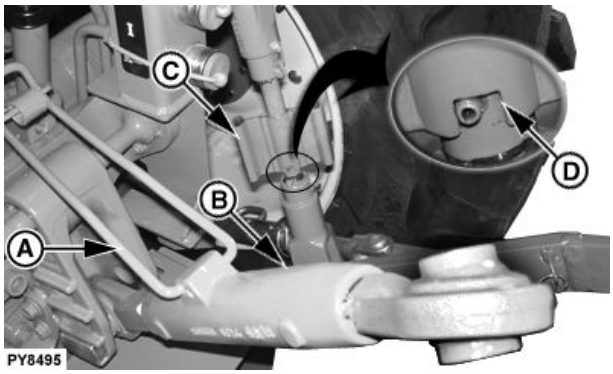

PY8495 —UN—31AUG09

A—Locking Clip
B—Center Link Body
C—Locking Handle
D—Slot

To change the left-hand lift link length, remove the upper lift link pin and rotate the upper end assembly clockwise to shorten or counterclockwise to lengthen, and then reinstall the upper pin and locking pin.

Adjust left and right lift links to accommodate various tire sizes. Set the lift links to have fully-lowered draft link balls approximately 17 cm (7 in.) off the ground for greatest range of usable hitch motion.

SA61034,0000715 -19-16DEC08-1/1

Adjust Lateral Float

To allow the draft link to raise slightly as implement follows the ground contour, place head of float pin and the rectangular washer on the inside end of the pin in a vertical position (A).

To hold implement rigid, place head of float pin and the rectangular washer in the horizontal position (B).

Use lift link pins in the float position for hitch-mounted implements such as a cultivator or mower, which have ground gauging skids or wheels which cause the implement to twist relative to the tractor.

Use the rigid position for implements such as plows and ground engaging implements that should not twist relative to the tractor.

A—Pin In Vertical Position **B—Pin In Horizontal Position**

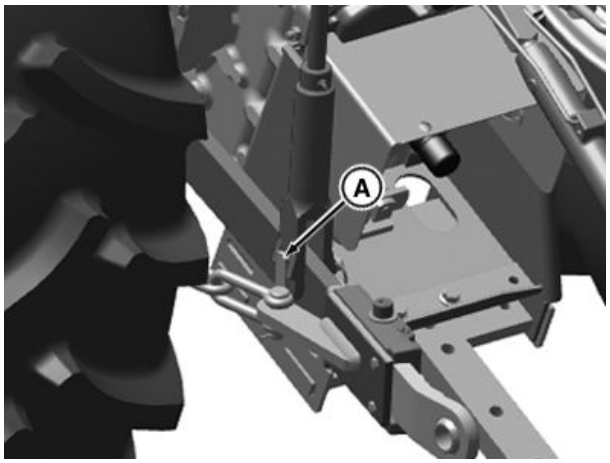

PY41508 —UN—06APR17

Vertical Position

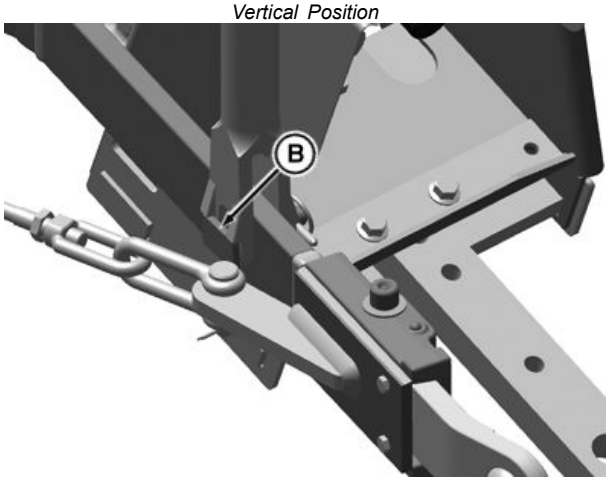

PY41507 —UN—06APR17

Horizontal Position

MD36154,00001C9 -19-06APR17-1/1

Warm Hydraulic System Oil

Hydraulic system may be slow to function when tractor is started in cold weather. This is because cold oil will not flow easily through the filter screen or hydraulic system filter (A).

Steering will slow until system warms up.

Hydraulic system will function normally when oil warms up.

IMPORTANT: To prevent damaging hydraulic pump or relief valve, DO NOT exceed two to three minutes warm up time.

1. Depress clutch pedal, start engine and idle at about 1000 rpm.
2. Turn and hold steering wheel in full left or right turn.

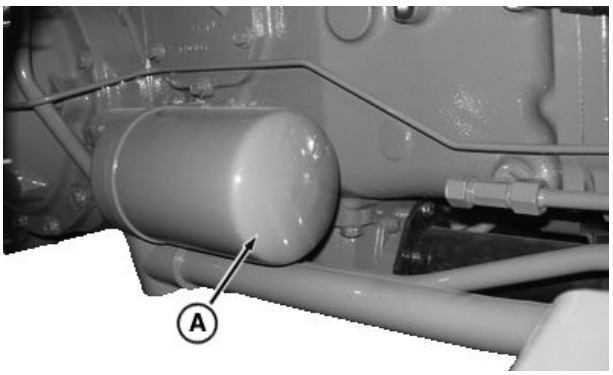

PY16176 —UN—26JUN12

A—Hydraulic Oil Filter

SD74272,0000217 -19-26JUN12-1/1

Open Center Hydraulic System

IMPORTANT: The hydraulic system design used on this tractor is known as an open center system. In general, it is not recommended to use continuous flow hydraulic motors with this type of system. Some hydraulic motors designed for open centered systems (high flow at low pressure) can be used, where a pressure compensated flow control valve is used to control speed. If the tractor is equipped with a dual function SCV, it must control motor speed with an independent pressure compensated flow control valve. Using a non-compensated flow control valve such as a needle valve can cause overheating of the hydraulic system. Consult your nearest John Deere dealer or service facility for more information regarding this type of application.

If the hydraulic motors are not correctly sized for an open center system, then hydraulic motor applications such as those used in the vacuum blower motors, centrifugal sprayer pumps, hydraulically driven rakes, or other similar applications can cause overheating of the hydraulic system. In such cases, the use of a PTO-driven hydraulic pump is recommended.

Open center systems cannot be used for implements requiring "active" downforce such as no-till, folding, air disk, and no-till air drills as well as used to maintain optimum press wheel downforce on air hoe-drills.

Anytime one of mentioned applications is considered, consult nearest John Deere dealer or service facility for information on how to open center system in these applications.

Failure to observe this application information damages hydraulic system of tractor.

SD74272,000023B -19-17MAR20-1/1

Warming Transmission-Hydraulic System Oil

CAUTION: Overheated hydraulic oil can cause personal injury and component malfunctions. To prevent hydraulic oil from overheating, DO NOT hold SCV or multifunction control lever (if equipped) in operating position for an extended period of time.

Hydraulic system may be slow to function when tractor is started in cold weather. Cold oil will not flow easily through the hydraulic system filter (A).

Steering may be slow until system warms up.

Hydraulic system will function normally when oil warms up.

1. Depress clutch pedal, start engine and idle at about 1000 rpm.

IMPORTANT: To prevent damaging hydraulic pump or relief valve, DO NOT exceed 2—3 minutes warm-up time with steering wheel held in full left or full right turn position.

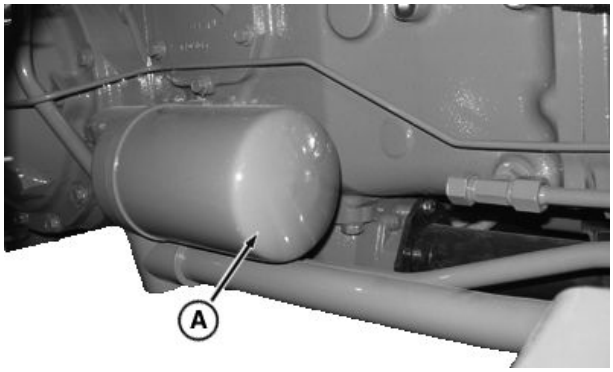

PY16176 —UN—26JUN12

A—Hydraulic Oil Filter

2. Turn and hold steering wheel in full left or full right turn, for no more than 3 minutes.

SD74272,000023C -19-10JUL12-1/1

Use Correct Hose Tips

If your tractor is equipped with a selective control valve (SCV), the couplers receptacles accept a standard hose tip as recommended by ISO[1] and SAE[2]. Adapters are available to allow connecting the older John Deere hose tips to the ISO couplers on your tractor.

[1] *International Standards Organization*
[2] *Society of Automotive Engineers*

MX,RHIP,AA -19-18MAR92-1/1

Control Lever and Coupler Identification — OOS

Movement of SCV I lever (A) fore/aft operates coupler (No. 1) receptacles (B).

Coupler I has a détented float position when lever (A) is moved in the fully forward direction.

NOTE: SCV II is optional and operation of SCV II is same as SCV I.

A—SCV I Lever
B—SCV I Receptacles
C—Label SCV I
D—Label SCV II (If Equipped)
E—SCV II Lever
F—Position Control Label
G—Draft Sense Control Label

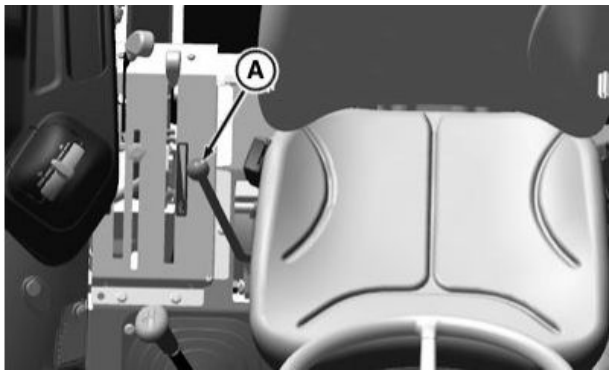

PY39872 —UN—20JUL17

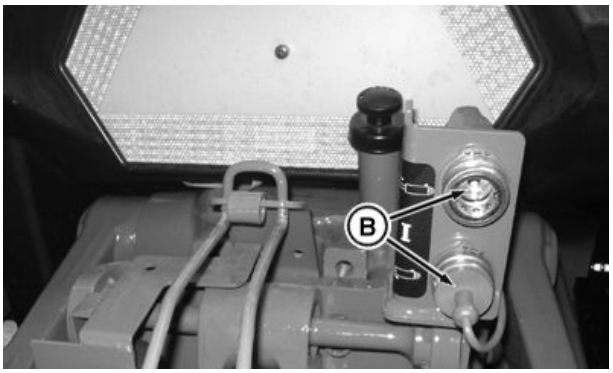

PY18358 —UN—01APR14

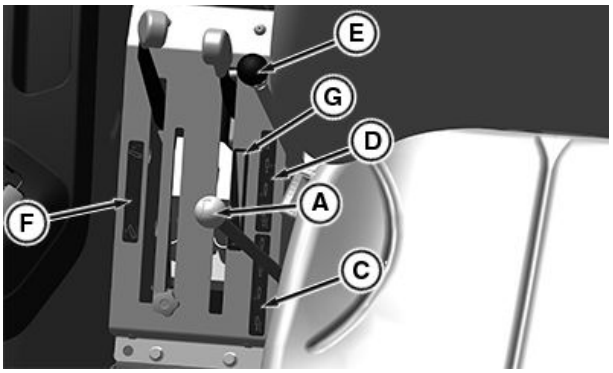

PY41991 —UN—18SEP17

HY01057,0000123 -19-18SEP17-1/1

Control Lever and Coupler Identification — CAB

Fore/aft movement of SCV levers (A and B) to operate SCV couplers (C, D, E, and F).

The SCV has a detented float position when the lever (A and B) is moved in the fully forward direction.

NOTE: SCV II is optional and operation of SCV II is same as SCV I.

A—SCV I Lever
B—SCV II Lever (If Equipped)
C— SCV I Coupler (Cylinder in Extract Position)
D— SCV I Coupler (Cylinder in Retract Position)
E— SCV II Coupler (Cylinder in Extract Position)
F— SCV II Coupler (Cylinder in Retract Position)
G— Label SCV I and SCV II
H— SCV Lock Label
I— Position Control Label
J— Draft Sense Control Label

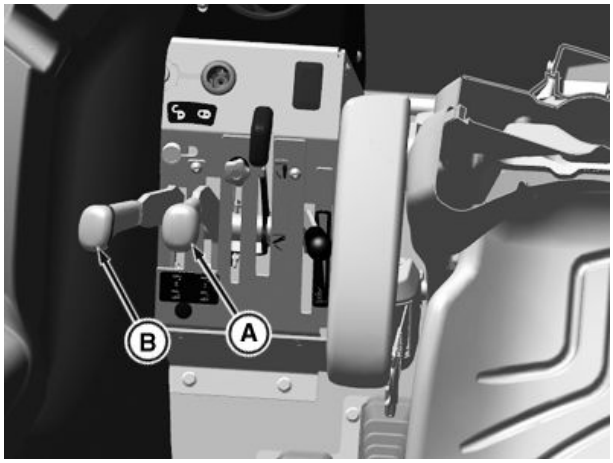

PY39874 —UN—20MAR17

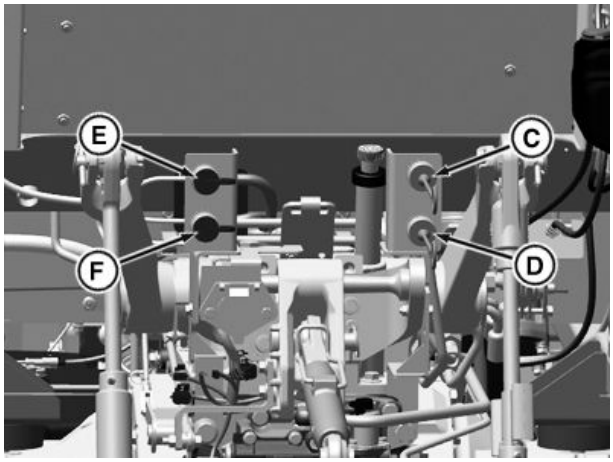

PY39875 —UN—20MAR17

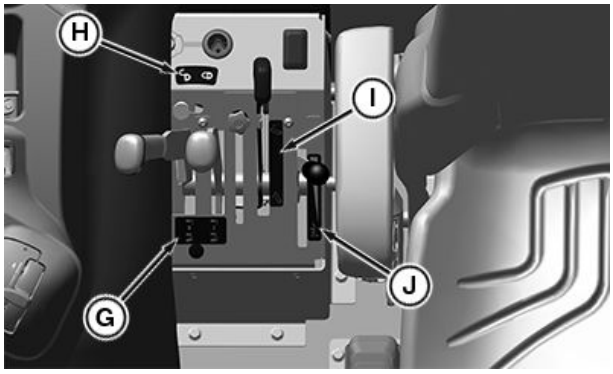

PY41990 —UN—18SEP17

NM61126,00004E0 -19-18SEP17-1/1

Mid-Mount Valve Coupler Identification (If Equipped)

NOTE: Refer loader Operator's Manual for hose and color identification.

A—Bucket Cylinder—Rod End
B—Bucket Cylinder—Head End
C—Boom Cylinder—Head End
D—Boom Cylinder—Rod End

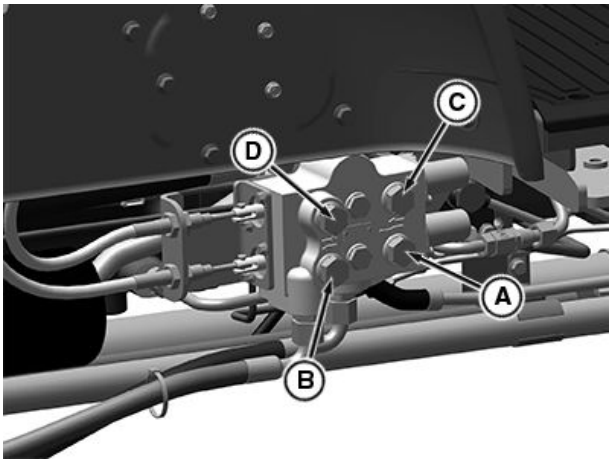

PY41755 —UN—13JUL17

NM61126,00004DF -19-14JUL17-1/1

Rear SCV Dust Plug Identification

SCV I - Colored in Green.

SCV II - Colored in Blue.

A—Red Dust Plug
B—Blue Dust Plug
C—Black Dust Plug (If Equipped)
D—Yellow Dust Plug (If Equipped)

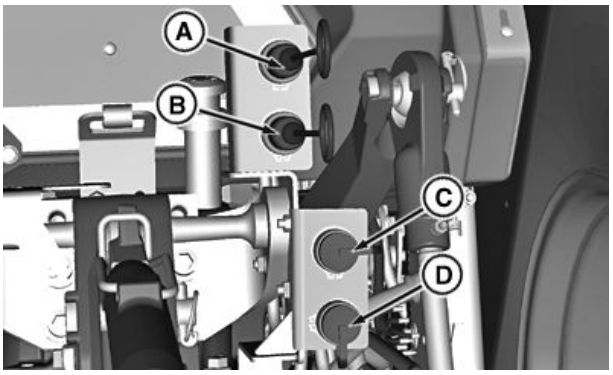

PY18424 —UN—17JUN14

OOS shown

NM61126,00004CC -19-04JUL17-1/1

SCV Numbers and Corresponding Colors

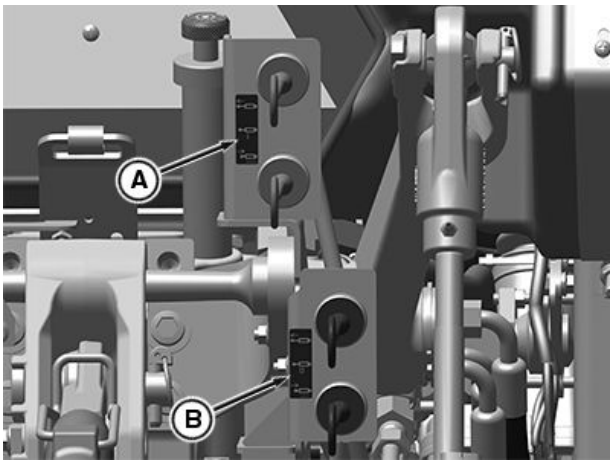

PY41981 —UN—18SEP17

For OOS Tractors

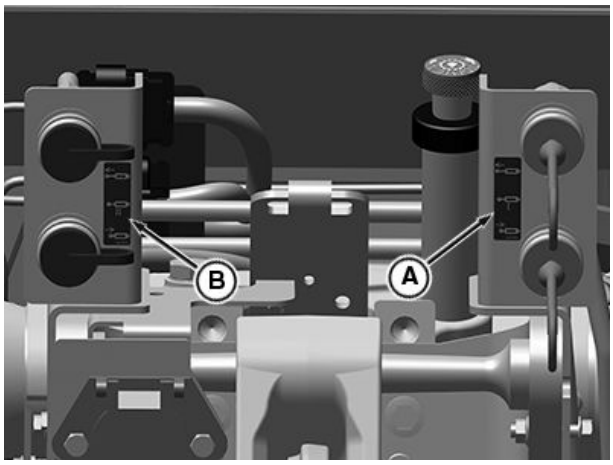

PY41982 —UN—18SEP17

For Cab Tractors

A—SCV I Label **B—SCV II Label ((If Equipped)**

SCV Numbers and Corresponding Colors	
SCV Numbers	**Colors**
SCV I	Green
SCV II	Blue

NOTE: SCV II is optional and operation of SCV II is same as SCV I.

NM61126,0000517 -19-18SEP17-1/1

Connect Cylinder Hoses

CAUTION: Escaping fluid under pressure can penetrate the skin causing serious injury. Avoid the hazard by relieving pressure before disconnecting hydraulic or other lines. Tighten all connections before applying pressure. Search for leaks with a piece of cardboard. Protect hands and body from high-pressure fluids.

If an accident occurs, see a doctor immediately. Any fluid injected into the skin must be surgically removed within a few hours or gangrene may result. Doctors unfamiliar with this type of injury should reference a knowledgeable medical source. Such information is available from Deere & Company Medical Department in Moline, Illinois, U.S.A.

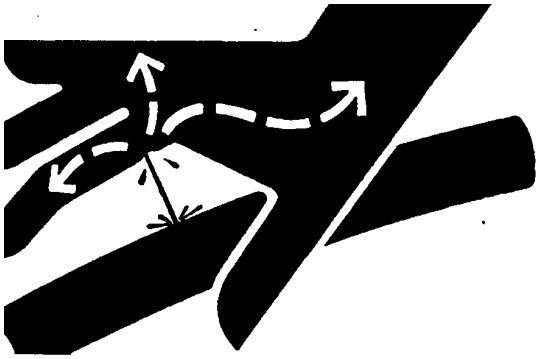

X9811 —UN—23AUG88

Continued on next page

SV86979,00000A0 -19-20AUG14-1/2

1. Remove dust plugs from hose end.
2. Pull dust plugs (A) from couplers.
3. Make sure that hose end and couplers are clean.
4. Coupler (B) receives cylinder extend hose.
5. Coupler (C) receives cylinder retract hose.

CAUTION: Hydraulic hoses can fail due to physical damage, kinks, age, and exposure. Check hoses regularly. Replace damaged hoses. See your John Deere dealer.

6. To connect each hose, push hose tip firmly into coupler. Pull lightly on hose, make sure that positive connection was made.

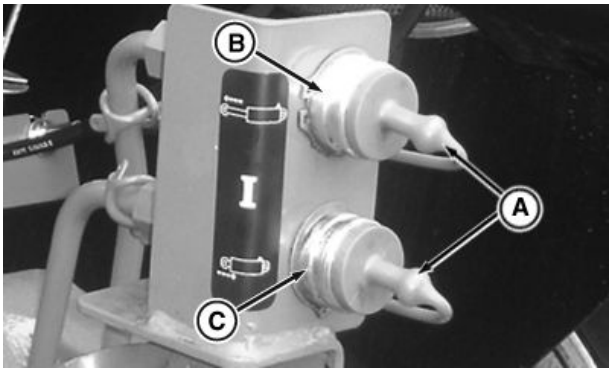

PY16606 —UN—16AUG12

A—Dust Plug
B—Coupler
C—Coupler

SV86979,00000A0 -19-20AUG14-2/2

Connect Cylinder Hoses—Mid-Mount Valve (If Equipped)

CAUTION: Escaping fluid under pressure can penetrate the skin causing serious injury. Avoid the hazard by moving all rear SCV control levers and mid-mount joystick in all directions to relieve pressure before disconnecting hydraulic or other lines. Tighten all connections before applying pressure. Search for leaks with a piece of cardboard. Protect hands and body from high pressure fluids.

If an accident occurs, see a doctor immediately. Any fluid injected into the skin must be surgically removed within a few hours or gangrene may result. Doctors unfamiliar with this type of injury should reference a knowledgeable medical source. Such information is available from Deere & Company Medical Department in Moline, Illinois, U.S.A.

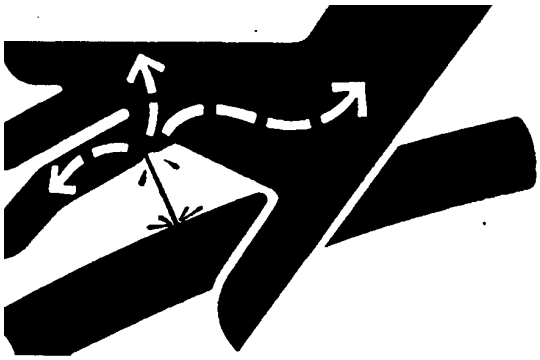

X9811 —UN—23AUG88

Continued on next page

AH98466,0000EBA -19-05MAR10-1/2

NOTE: Hose connections at mid-mount valve are color-coded.

1. Match hoses to couplers using color-coded dust caps/plugs.

Key	Tie Band/Plug/Cap Color	Hydraulic Function
A	Yellow	Bucket Cylinder—Head End
B	Black	Bucket Cylinder—Rod End
C	Blue	Lift Cylinder—Head End
D	Red	Lift Cylinder—Rod End

Loader Hoses

2. Remove dust caps from hose ends.
3. Pull dust plugs from valve couplers.

CAUTION: Hydraulic hoses can fail due to physical damage, kinks, age and exposure. Check hoses regularly. Replace damaged hoses.

4. Make sure hose end and couplers are clean, push hose tip firmly into coupler. Pull on hose to make sure positive connection is made.
5. Connect mating (color-coded) plugs and caps (E) together.

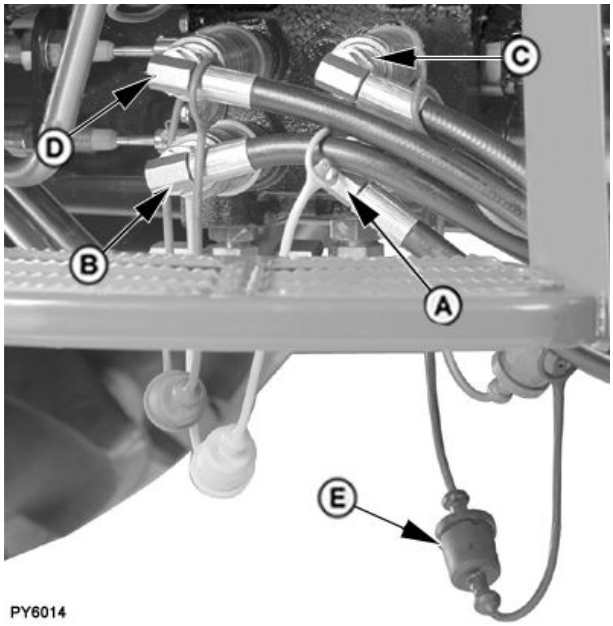

PY6014 —UN—27JUL06

Mid Mount SCV Valve

A—Bucket Cylinder-Rod End
B—Bucket Cylinder-Head End
C—Lift Cylinder-Head End
D—Lift Cylinder-Rod End
E—Caps

AH98466,0000EBA -19-05MAR10-2/2

Connect Single-Acting Cylinder

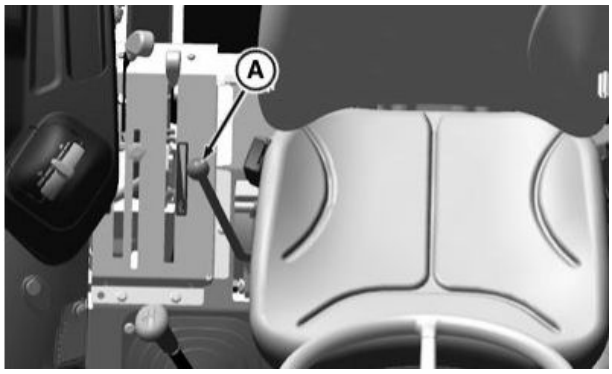

PY39872 —UN—20JUL17

Right Side Controls, IOOS

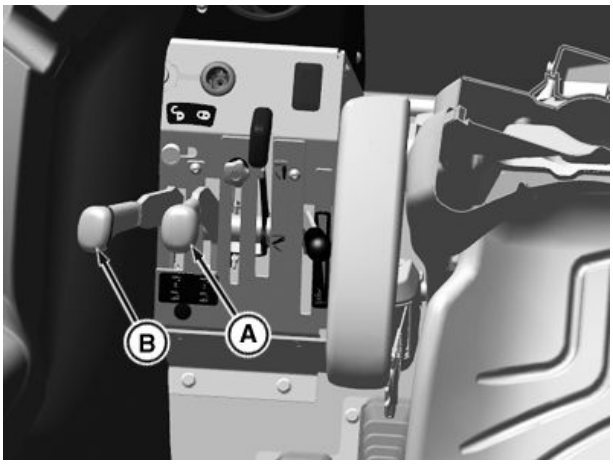

PY39874 —UN—20MAR17

Right Side Controls, CAB

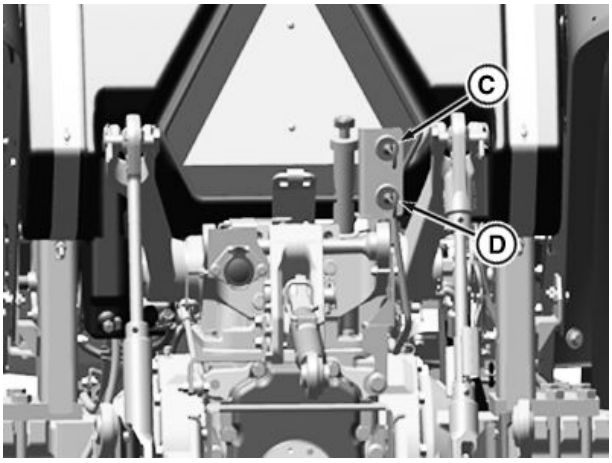

PY39876 —UN—20MAR17

SCV Couplers, OOS

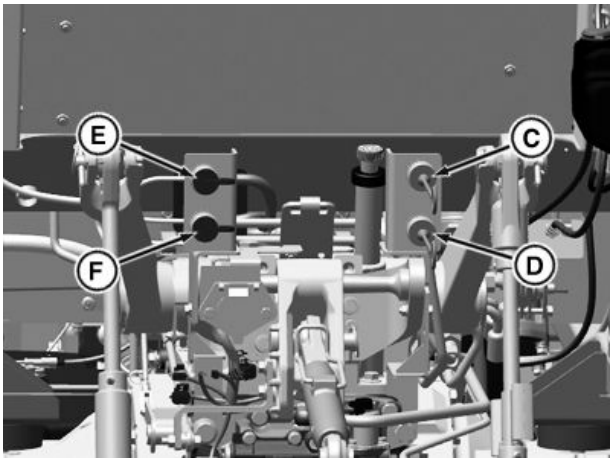

PY39875 —UN—20MAR17

SCV Couplers, CAB

A—SCV I Lever
B—SCV II Lever (If Equipped)
C— SCV I Coupler (Cylinder in Extract Position)
D— SCV I Coupler (Cylinder in Retract Position)
E— SCV II Coupler (Cylinder in Extract Position)
F— SCV II Coupler (Cylinder in Retract Position)

In order for lever (A and B) to work properly, a single-acting cylinder should be connected only to extend hose SCV outlet.

IMPORTANT: Volume of oil required to extend cylinder must not lower transmission-hydraulic oil level. Check oil level with cylinder fully extended. (See Transmission-Hydraulic System)

Push SCV control lever full forward to use “float” position to lower single-acting cylinder.

“Float” position allows a cylinder to extend and retract freely and uses no engine power.

SCV I - Colored in Green.

SCV II - Colored in Blue.

NOTE: SCV II is optional and operation of SCV II is same as SCV I.

HY01057,0000122 -19-13JUL17-1/1

Correct Reversed Cylinder Response

CAUTION: If cylinder response is reversed, extending when it should retract, reverse cylinder hose connections at coupler.

SA61034,000022A -19-29FEB08-1/1

Neutral Lever Position

SCV I lever (B) or SCV II lever (C), spring pressure returns lever (B or C) to a centered position (except when lever is fully forward in the “Float” position). When the control levers are in the centered position, the remote cylinder is hydraulically locked in position.

NOTE: SCV II is optional and operation of SCV II is same as SCV I.

B—SCV I Lever **C—SCV II Lever ((If Equipped)**

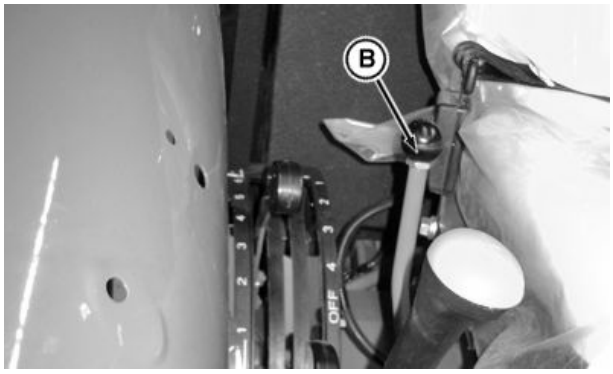

PY17940 —UN—11JUN14

SCV Levers — OOS

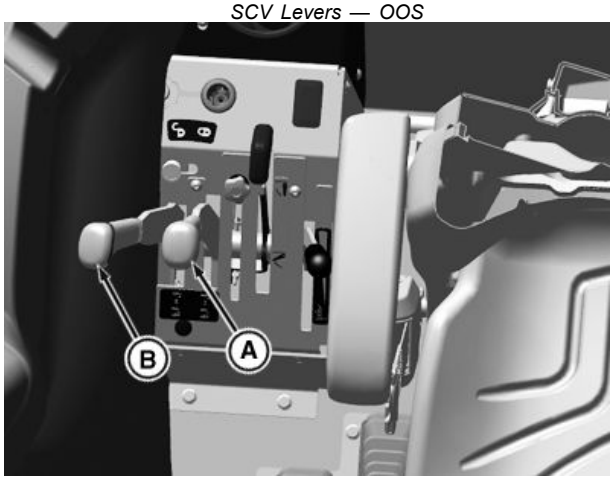

PY39874 —UN—20MAR17

SCV Lever — Cab

HY01057,0000121 -19-14JUL17-1/1

Extend/Retract Cylinder

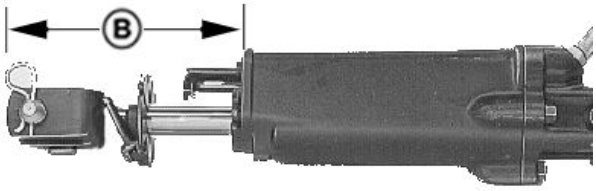

PY6487 —UN—20NOV18

Cylinder

A—Control Lever **B—Extend and Retract Cylinder**

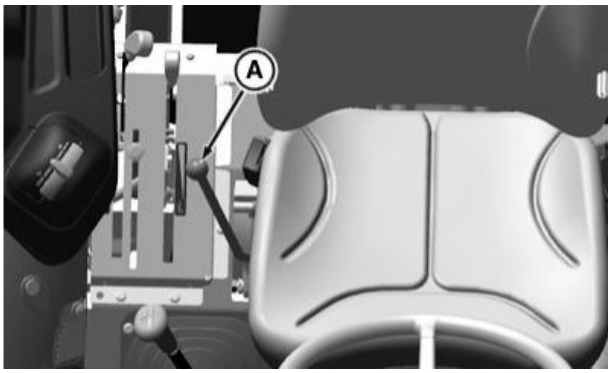

PY39872 —UN—20JUL17

OOS

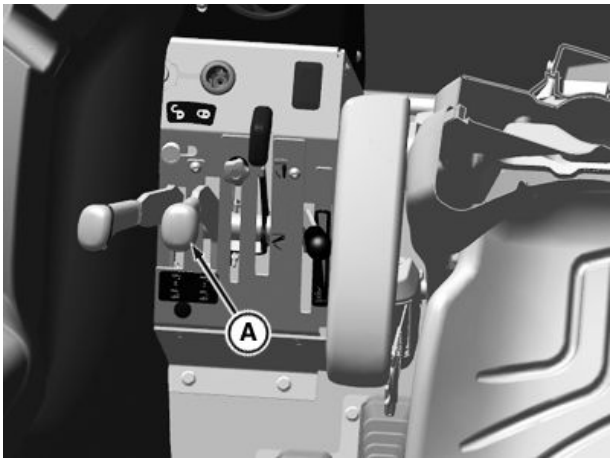

PY39873 —UN—20MAR17

Cab

Extend Cylinder

Pull lever (A) to the rear of neutral and hold it against spring pressure. This extends cylinder (B) (up arrow) connected to couplers I and in most cases raises implement. Lever returns to neutral when released.

Retract Cylinder

Push lever (A) forward and hold it against spring pressure. This retracts cylinder (B) connected to SCV couplers and in most cases lowers implement. Lever returns to neutral when released.

Float Position

Push lever full forward into detent to operate Float feature. Float operation allows cylinder to extend and retract freely, such as when an implement follows ground contour.

IMPORTANT: When FLOAT is not needed, manually move lever back to neutral position to prevent accidental use of “Float”.

HY01057,0000120 -19-14MAR17-1/1

Use Power Beyond Attachment (If Equipped)

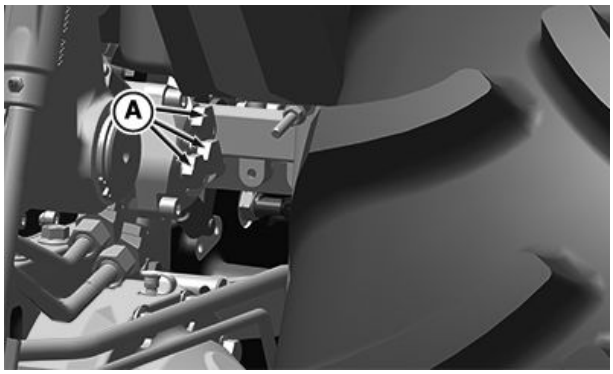

PY41777 —UN—18JUL17

A—Plug
B—Hydraulic hose (PBP port power beyond to mid mount SCV)
C—Hydraulic hose (Outlet port power beyond to mid mount SCV)
D—Hydraulic hose (Inlet port of power beyond to mid mount SCV)

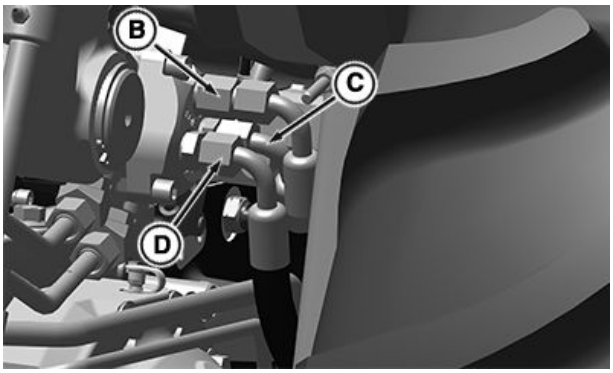

PY41776 —UN—18JUL17

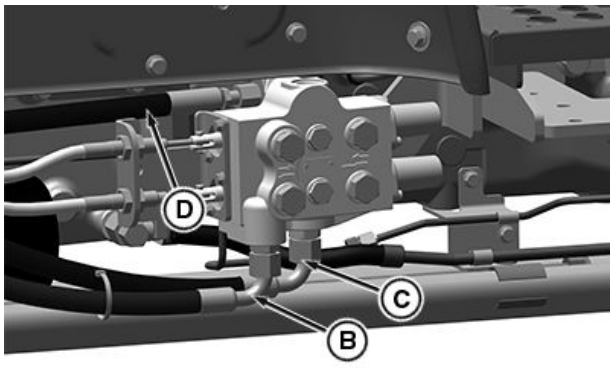

PY41780 —UN—18JUL17

Power beyond is designed for operations of orbital motors or any application where continuous high volume hydraulic oil flow is needed.

To use power beyond remove three plugs (A), connect hose (B) from power beyond to mid mount SCV, power beyond outlet hose (C) to mid mount SCV, and connect inlet hose (D) from power beyond to mid mount SCV.

When not in use, plug power beyond and mid mount valve.

NOTE: Images shown for OOS tractors, for CAB tractors hydraulic hose connection same as OOS tractor.

NM61126,00004E1 -19-18JUL17-1/1

Adjust Cylinder Stop

Working stroke of remote cylinder is adjustable. Cylinder retracts only until it contacts movable stop, then stops automatically.

1. Lift lever (A).
2. Slide adjustable stop (B) to desired position.
3. Push lever down firmly. Be sure lever will not contact stop rod arm (C).

IMPORTANT: Be sure stop clamps securely on rod. If it does not, lift lever and rotate it clockwise, then push it down firmly.

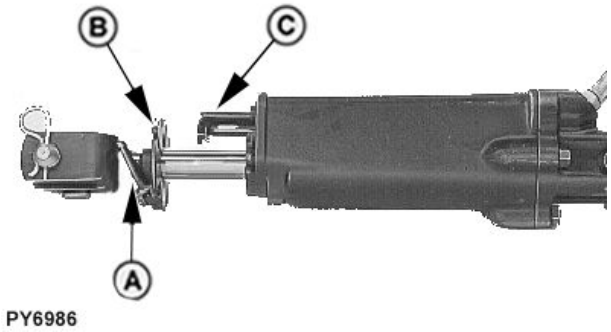

PY6986 —UN—17MAY07

A—Lever
B—Adjustable Stop
C—Stop Rod Arm

SA61034,000022D -19-29FEB08-1/1

Disconnect Cylinder Hoses

1. If possible, RETRACT the remote cylinder as much as possible to protect the cylinder rod from damage.

CAUTION: Escaping fluid under pressure can penetrate the skin causing serious injury. Avoid the hazard by relieving pressure before disconnecting hydraulic or other lines. Relieve hydraulic pressure by moving the control lever/joystick through all the positions. Tighten all connections before applying pressure. Search for leaks with a piece of cardboard. Protect hands and body from high-pressure fluids.

If an accident occurs, see a doctor immediately. Any fluid injected into the skin must be surgically removed within a few hours or gangrene can result. Doctors unfamiliar with this type of injury must refer a knowledgeable medical source. Such information is available from Deere & Company Medical Department in Moline, Illinois, U.S.A.

2. With as much hydraulic pressure relieved as possible from hoses, pull hoses from couplers.
3. Make sure dust plugs (A) for receptacles and dust caps for hoses are clean, then install dust plugs (A).

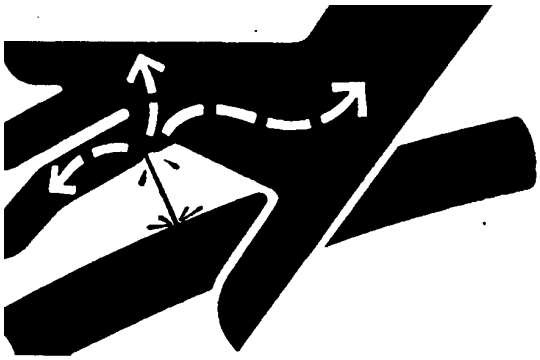

X9811 —UN—23AUG88

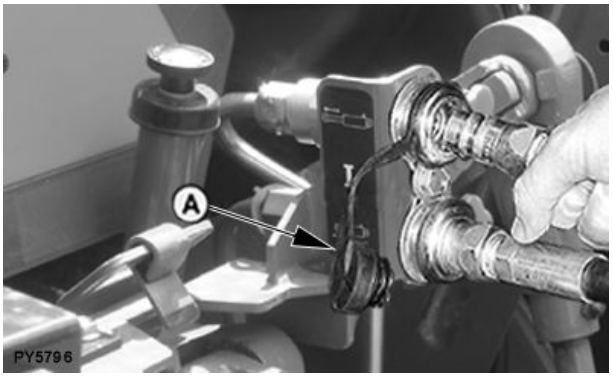

PY5796 —UN—08JUN06

A—Dust Plug

SA61034,000067A -19-18MAR20-1/1

Observe Drawbar / Wagon Hitch Load Limitations

IMPORTANT: Certain heavy equipment, such as a loaded single-axle trailer, can place excessive strain on drawbar. Strain is greatly increased by speed and rough ground.

Static vertical load on drawbar/wagon hitch should not exceed 250 kg (552 lb).

Drive slowly with heavy loads.

MX,DRIP,JJA1 -19-10JAN08-1/1

Use Swinging Drawbar

Drawbar cap screws (A) can be removed to let drawbar swing free. This is helpful when turning under load.

Drawbar cap screws should be installed and tightened at all other times.

IMPORTANT: Install drawbar cap screws to prevent drawbar from swinging free during transport of towed loads.

A—Drawbar Cap Screws

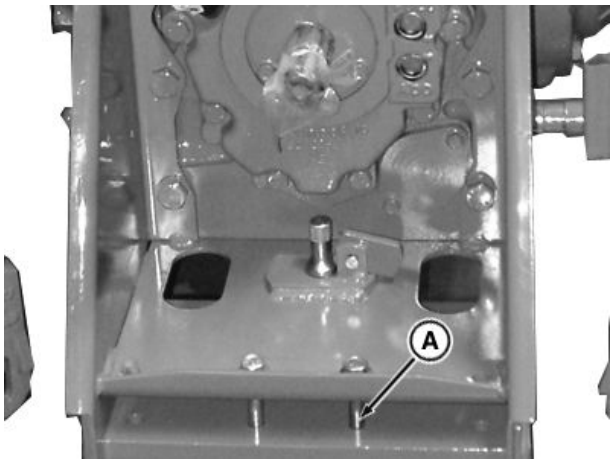

PY16044 —UN—31MAR14

PowrReverser™

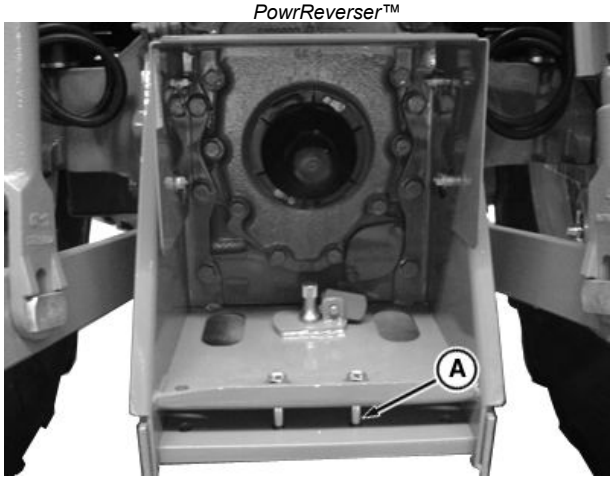

PY16187 —UN—26JUN12

Sync Shuttle

HY01057,0000109 -19-14FEB17-1/1

Adjustable Drawbar

The drawbar is used to pull drawn equipment of all types, particularly PTO-driven implements.

The drawbar hitch is located so as to increase the rear axle load and at the same time slightly reduce load on the front axle.

Besides having a variable swinging range, the drawbar can also be adjusted lengthwise.

Maximum permissible static vertical loads and towable drawbar loads are stated in the "Specifications" section.

NOTE: Towing on public roads with the swinging drawbar set to one side is not permitted!

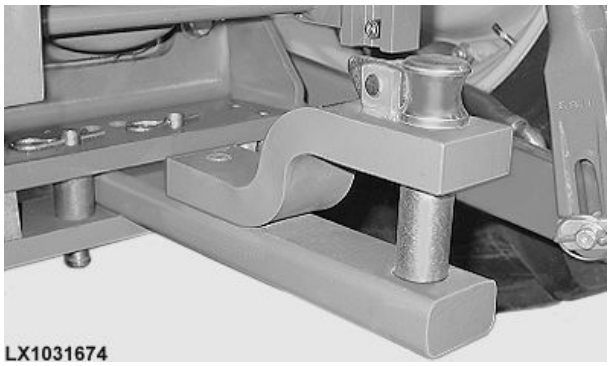

LX1031674 —UN—19FEB03

PY16188 —UN—19DEC12

HY01057,000010A -19-14FEB17-1/1

Proper Use of Drawbar

IMPORTANT: Comply with local traffic regulations when using the drawbar. Use suitable, approved hitch pins only. Combine drawbars as shown only.

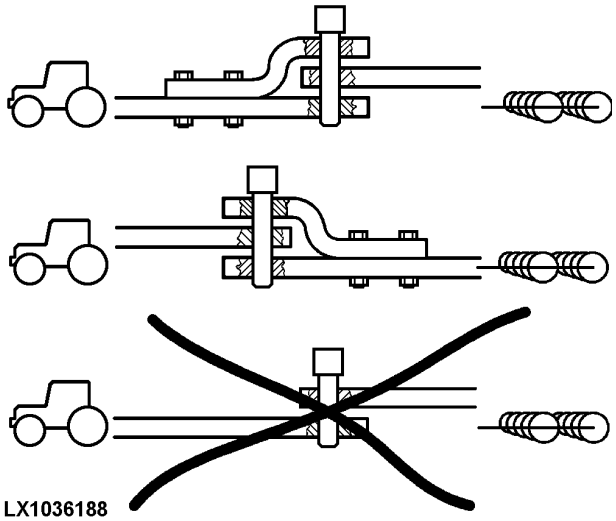

LX1036188 —UN—02MAY05

HY01057,000010B -19-14FEB17-1/1

Stay Clear of Rotating Drivelines

Entanglement in rotating driveline can cause serious injury or death.

Keep tractor master shield and driveline shields in place at all times. Make sure rotating shields turn freely.

Only use power take-off driveshafts with adequate guards and shields.

Wear close fitting clothing. Stop the engine and be sure that PTO driveline is stopped before making adjustments, connections, or cleaning out PTO driven equipment.

Do not install any adapter device between the tractor and the primary implement PTO driveshaft that will allow a 1000 rpm tractor shaft to power a 540 rpm implement at speeds higher than 540 rpm.

Do not install any adapter device that results in a portion of the rotating implement shaft, tractor shaft, or the adapter to be unguarded. The tractor master shield shall overlap the end of the splined shaft and the added adaptor device as outlined in the table.

The angle at which the primary implement PTO driveshaft can be inclined may be reduced depending on the shape and size of the tractor master shield and the shape and size of the guard of the primary implement PTO driveshaft.

Do not raise implements high enough to damage the tractor master shield or guard of primary implement PTO driveshaft. Detach the PTO driveline shaft if it is necessary to increase implement height. (See Attching/Detaching PTO Driveline)

When using Type 3/4 PTO, inclination and turning angles may be reduced depending on type of PTO master shield and coupling rails.

TS1644 —UN—22AUG95

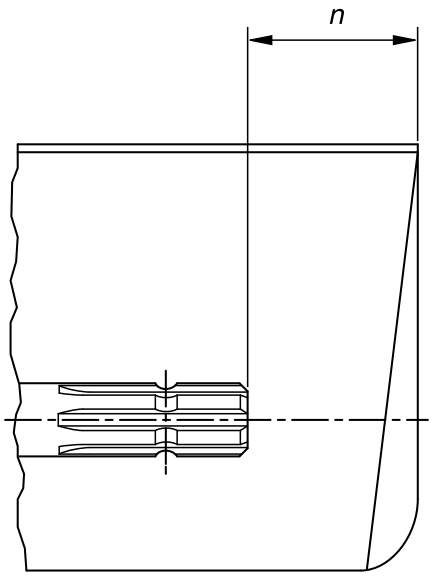

H96219 —UN—29APR10

PTO Type	Diameter	Splines	n ± 5 mm (0.20 in.)
1	35 mm (1.378 in.)	6	85 mm (3.35 in.)
2	35 mm (1.378 in.)	21	85 mm (3.35 in.)
3	45 mm (1.772 in.)	20	100 mm (4.00 in.)
4	57.5 mm (2.264 in.)	22	100 mm (4.00 in.)

DX,PTO -19-28FEB17-1/1

Attach PTO-Driven Implement

CAUTION: Entanglement in rotating driveline can cause serious injury or death.

Keep tractor PTO shield and driveline shields in place at all times. Make sure rotating shields turn freely.

Before making adjustments, connections or cleaning PTO driven equipment, STOP the engine and wait for PTO drivelines to stop.

TS1644 —UN—22AUG95

1. Turn key to STOP position to shut off engine.
2. Put drawbar (A) in extended position. If implement will be connected to 3-point hitch, be sure drawbar will not interfere. Fully retract drawbar or remove it if necessary. (See "Select Drawbar Position" in this section.)
3. Install drawbar lock pin.
4. Attach implement to tractor (drawbar or 3-point hitch) before connecting PTO driveline. Raise hitch to full-up (transport) position if it is not to be used.
5. Flip PTO master shield (B) up for clearance. With engine off, turn PTO shaft by hand to line up splines. Connect driveline to PTO shaft. Pull driveline to be sure it is locked to PTO shaft. Return PTO shield to down position.

IMPORTANT: Maintain the gap 12-15 mm by closing the PTO master shield (B) in such way that PTO shield should rest on cap screw (D) on both sides shown in graphic.

6. Check that all shields are in place and in good condition. WITH ENGINE STOPPED, check driveline shields on driveline by making sure they rotate freely on shaft. Lubricate or repair as necessary.

CAUTION: Never operate PTO unless master shield is properly installed.

7. Check for interference.

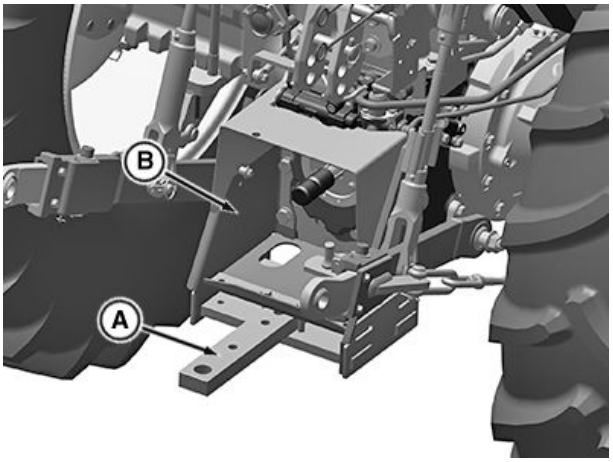

PY44501 —UN—22JUN17

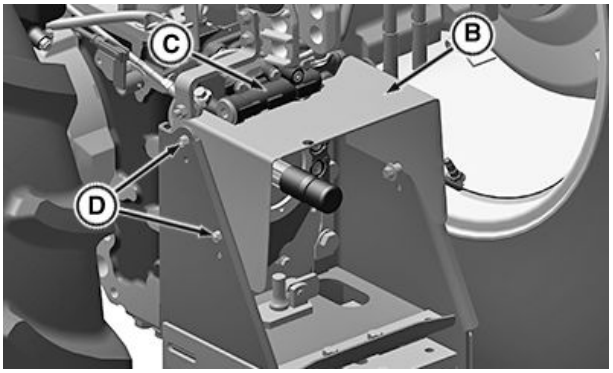

PY44502 —UN—22JUN17

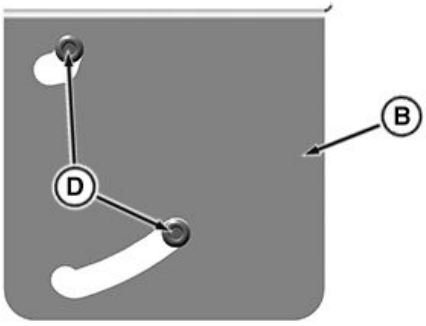

PY35513 —UN—19APR17

A—Drawbar
B—PTO Master Shield
C—EH Control Valve
D—Cap Screw

RM87422,00007B1 -19-22JUN17-1/1

Operating Tractor PTO — PowrReverser™

1. Start engine and push hand throttle lever (A) forward until the tachometer indicates PTO rated speed of 2100 rpm for 540 operation.

A—Hand Throttle Lever

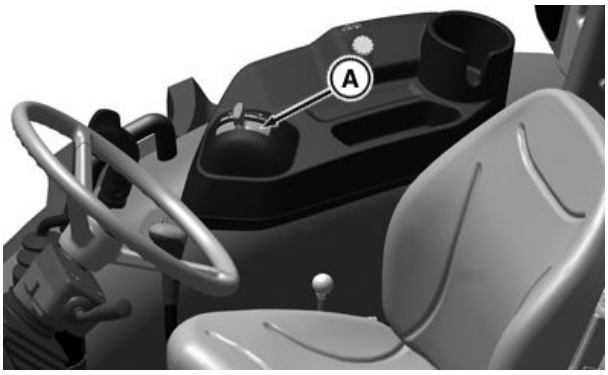

PY43068 —UN—13JUL17

OOS Only

PY43069 —UN—13JUL17

Cab Only

Continued on next page

HY01057,0000104 -19-13JUL17-1/2

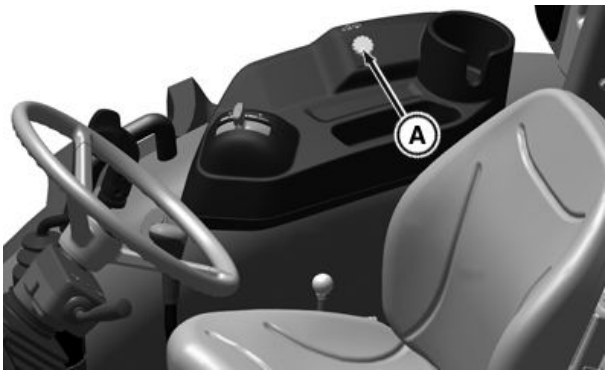

PY43072 —UN—13JUL17

OOS Only

PY43073 —UN—13JUL17

Cab Only

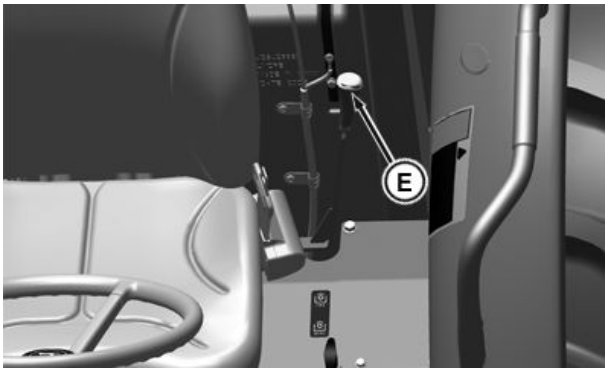

PY43070 —UN—13JUL17

PTO 540/540E Shift Lever (OOS)

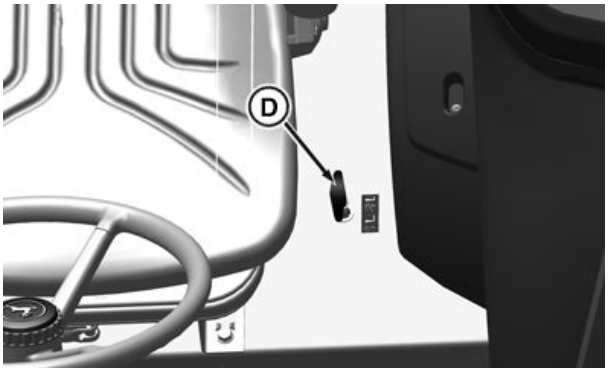

PY43071 —UN—13JUL17

PTO 540/540E Shift lever (Cab)

NOTE: If operator is NOT on seat when PTO switch is On:

- ***OOS:*** *Operator Alert Indicator (C) turns ON*
- ***Cab:*** *Audible alarm sounds*

2. **OOS:** Pull the PTO Switch (A) outward, to engage PTO. Indicator light (B) turns on when PTO is engaged.

   Cab: Pull the PTO Switch (A) up, to engage PTO. Indicator light (B) turns on when PTO is engaged.

3. **For Cab:** Pull lever (D) up for economical 540 operation and push it down for 540 standard operation.

4. **For OOS:** Move shift lever (E) forward for economical 540 operation and pull shift lever back for 540 standard operation.

CAUTION: Avoid personal injury. Stop engine and allow PTO driveline to stop before adjusting, connecting, or cleaning PTO-driven implement.

To avoid entanglement with rotating shaft, always disengage PTO when not in use.

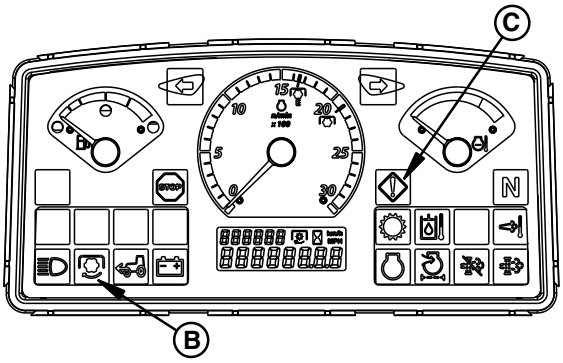

PY18020 —UN—31MAR14

A—PTO Switch
B—PTO Indicator Light
C—Operator Alert Indicator
D—PTO 540/540E Shift Lever
E—PTO 540/540E Shift Lever

5. **OOS:** Push the PTO switch inward to disengage PTO.

   Cab: Push the PTO switch down to disengage PTO.

HY01057,0000104 -19-13JUL17-2/2

Operating Tractor PTO — Sync Shuttle

NOTE: Engine will not start if PTO control lever is engaged.

1. Depress clutch pedal, start engine and push hand throttle lever (A) forward until engine tachometer indicates PTO rated speed of 2100 rpm.

A—Hand Throttle Lever

PY41767 —UN—13JUL17

Hand Throttle Lever — OOS

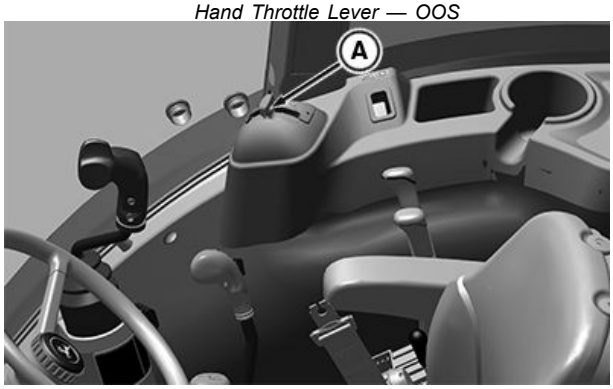

PY41768 —UN—13JUL17

Hand Throttle Lever — Cab

Continued on next page

NM61126,00004CF -19-13JUL17-1/2

2. Move PTO lever (A) forward, to engage PTO. Indicator light (B) will turn on when PTO is engaged.

CAUTION: Avoid personal injury. Stop engine and allow PTO driveline to stop before adjusting, connecting or cleaning PTO-driven implement.

To avoid entanglement with rotating shaft, always disengage PTO when not in use.

3. Pull the PTO lever back to disengage PTO.

A—PTO Lever **B—PTO Indicator Light**

PY41758 —UN—20JUL17

OOS

PY16190 —UN—04SEP12

Cab

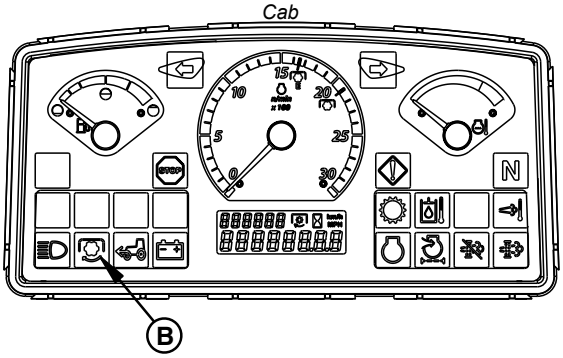

PY18073 —UN—31MAR14

NM61126,00004CF -19-13JUL17-2/2

Select Correct PTO Speeds—If Equipped

IMPORTANT: Disengage PTO with switch (A) before changing PTO speed with lever (B). NEVER use shiftable PTO lever (B) to engage or disengage PTO.

PY43074 —UN—18JUL17

Cab Only

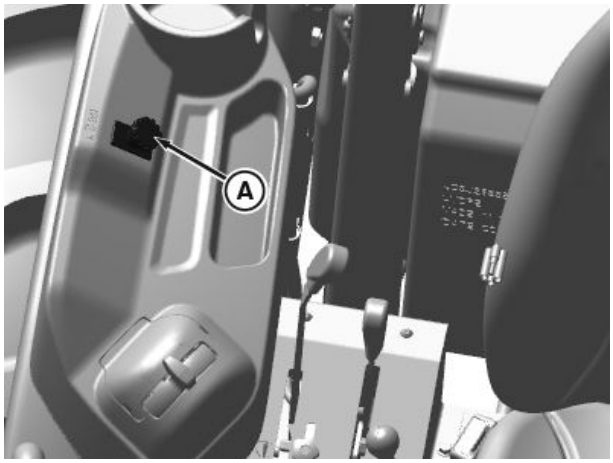

PY37362 —UN—22FEB17

OOS Only

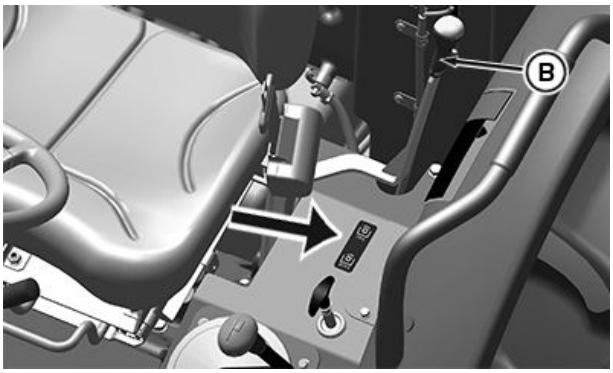

PY41986 —UN—18SEP17

PTO 540/540E Shift lever (OOS)

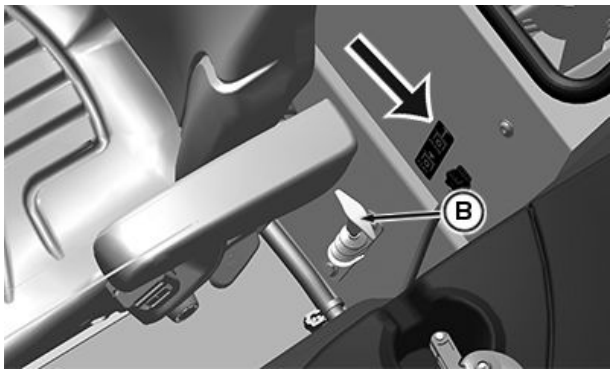

PY41987 —UN—18SEP17

PTO 540/540E Shift lever (Cab)

PY41988 —UN—18SEP17

PTO Label, For OOS Tractors

PY41989 —UN—18SEP17

PTO Label, For Cab Tractors

A—PTO Switch **B—PTO Shift Lever**

Standard 540 Operation

No PTO speed selection required. Engage standard 540 PTO with switch (A).

NOTE: Standard 540 rpm power take-off speed is reached at 2083 rpm engine speed.

540/540E Operation

For economy 540 PTO operation (lighter load),

For Cab: Pull lever (B) up for economical 540 operation and push it down for 540 standard operation.

Continued on next page

HY01057,0000106 -19-18SEP17-1/2

For OOS: Move shift lever (B) forward for economical 540 operation and move shift lever rearward for 540 standard operation.

In economic mode, engine operates at lower rpm to conserve fuel and reduce overall operating noise while still turning PTO shaft at 540 rpm.

NOTE: Economy 540 rpm power take-off speed is reached at 1588 rpm engine speed.

HY01057,0000106 -19-18SEP17-2/2

Adjust PTO Clutch Operating Cable

1. Push PTO Lever (A) to rearward (disengaged) position.
2. Remove spring lock screw (B).
3. Rotate PTO lever (E) counterclockwise until free play is removed (slight resistance encountered).
4. Adjust yoke (D) until spring lock screw can be installed through yoke and lever.
5. Install spring lock screw through yoke and lever.

A—PTO Clutch Lever
B—Spring Lock Screw
C—Cable
D—Yoke
E—PTO Lever

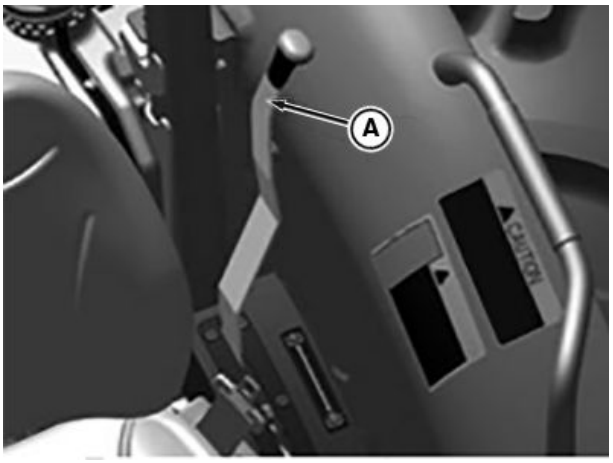

PY37365 —UN—27JUL17

PTO Control Lever — Sync Shuttle, OOS

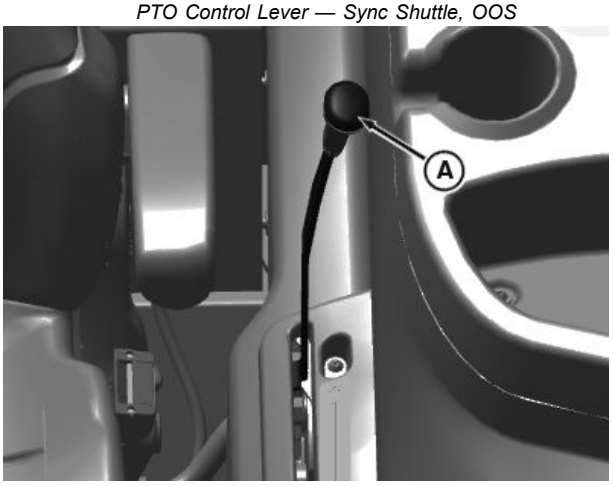

PY37366 —UN—22FEB17

PTO Control Lever — Sync Shuttle, Cab

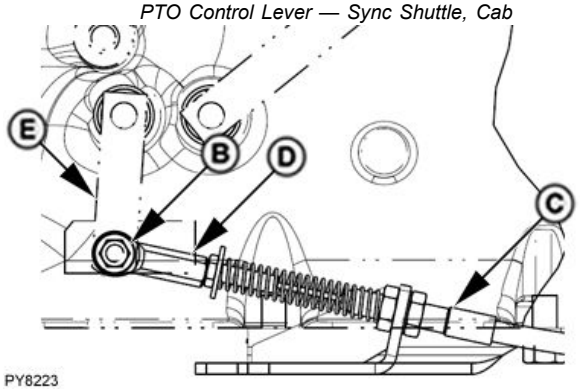

PY8223 —UN—06MAR08

VP52664,0000669 -19-04NOV19-1/1

Performance Ballast

Planning for Maximum Productivity

Proper ballasting is an important factor in tractor performance. Maximum productivity can be achieved only if tractor weight is appropriate for the job.

John Deere provides additional information on performance ballasting in two of the manuals in the series “Fundamentals of Machine Operations”.

(See John Deere Service Literature Available in this manual.):

- “Tractors” provides information on determining correct tractor weight and ballast selection.
- “Machinery Management” provides information on implement matching and increasing productivity.
- John Deere dealer assists with the information on these subjects.

SD74272,0000325 -19-17MAR20-1/1

Selecting Ballast Carefully

Match amount of ballast needed for each job. What is right for one job may be wrong for another job. Ballast for traction and stability.

Factors determining amount of ballast:
- Soil surface—loose or firm
- Type of implement—integral/semi-integral or towed
- Travel speed—slow or fast
- Tractor power output—partial or full load
- Tire size

Ballasting MFWD-Equipped Tractors

Ideal tire slippage for MFWD-equipped tractors is 8—12%. To reduce wheel slip to this level, more weight is needed on the front than with two-wheel-drive tractors. The ideal weight split is 40% front, 60% rear, of total tractor weight. In some cases liquid ballast will be needed in front tires to obtain this weight split.

If equipped with a loader, provide adequate ballast to rear wheels.

NOTE: Implement codes are used to determine proper ballast for stability and steering control. Refer to the implement code in your implement operator's manual, along with USING IMPLEMENT CODES in this section, to determine the minimum number of front weights that are required for your tractor model. In some cases, additional front ballast is required for optimum field performance. If more assistance is needed, see your John Deere dealer.

Matching Ballast to Work Load

Use no more ballast than necessary, and remove ballast when it is no longer needed.

Rather than weighing tractor down to pull heavy loads, try to reduce load. Pulling a lighter load at a higher speed is more economical and more efficient.

Too Little Ballast		Too Much Ballast	
1.	Excessive wheel slip	1.	Increased load
2.	Power loss due to churning soil	2.	Power loss due to carrying extra weight
3.	Tire wear	3.	Tire strain
4.	Fuel waste	4.	Soil compaction
5.	Lower productivity	5.	Fuel waste
		6.	Lower productivity

Ballast Limitations

Ballast should be limited by either tire capacity or tractor capacity. Each tire has a recommended carrying capacity which should not be exceeded (see Wheels, Tires and Treads section). If a greater amount of weight is needed for traction, a larger single tire should be considered.

Ballast can be added as either liquid or cast iron.

Checking for Correct Ballast

The best way to check for correct ballast is to measure amount of travel reduction (% slip) of the drive wheels. Under normal field conditions, travel reduction should be 10—15% (8— 12% for MFWD tractors)..

Add more weight to drive wheels if slip is excessive. If there is less than minimum recommended slip, weight should be removed.

SD74272,0000326 -19-04SEP12-1/1

Ballasting for Front Loader

Follow ballasting instructions of the front loader operator manual.

SD74272,0000327 -19-17MAR20-1/1

Measure Wheel Slip—Manually

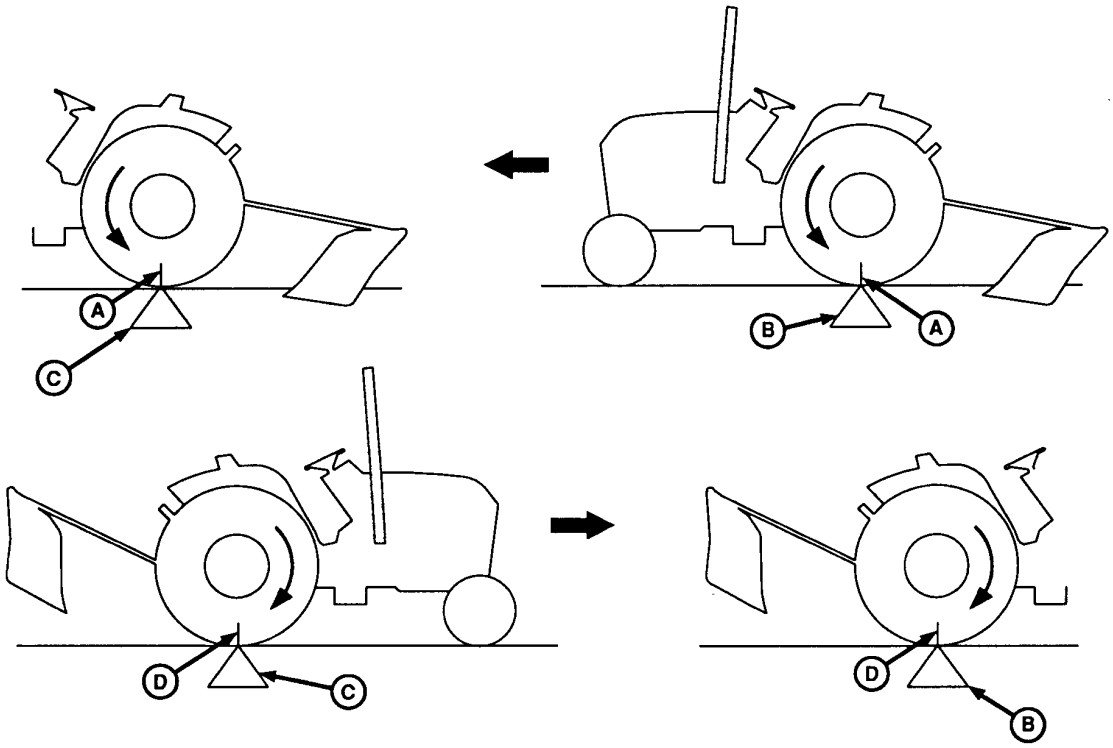

LV733 —UN—25JUN94

A—Initial Tire Mark
B—Ground Starting Point
C—10 Revolutions Ground Mark
D—Second Tire Mark

1. Draw a visible mark (A) on one rear tire (a chalk mark is recommended).
2. With tractor working, mark a starting point (B) on the ground at the place where tire mark (A) meets the ground.
3. Mark the ground again where tire mark (A) completes 10 full revolutions (C).
4. With implement raised return in the opposite direction. At the second mark on the ground (C) remark tire (D).
5. While driving the tractor along the same path (implement raised), count the tire revolutions required to reach starting point (B).
6. Use the return tire revolution count and Wheel Slippage.

NOTE: Ideal wheel slippage. 10-15 percent for two-wheel drive tractors or 8-12 percent for four-wheel drive tractors.

7. Adjust ballast or load to give correct slippage.

NOTE: Available horsepower is greatly reduced when wheel slip drops below minimum percent.

WHEEL SLIPPAGE CHART

Non-Loaded Wheel Revolutions (Step 5)	Estimated % Slip	Recommended Action
10	0	Remove Ballast
9-1/2	5	Remove Ballast
9	10	Correct Ballast
8-1/2	15	Correct Ballast
8	20	Add Ballast
7-1/2	25	Add Ballast
7	30	Add Ballast

SD74272,00004C3 -19-13MAR13-1/1

Ballast Limitations

Tire or tractor capacity must not exceed ballast limitation. Each tire has a recommended carrying capacity which must not be exceeded (see Wheels, Tires, and Treads section). If a greater amount of weight is needed for traction, a larger single tire is considered.

Ballast can be added as either liquid or cast iron.

SD74272,0000329 -19-17MAR20-1/1

Ballast Front End for Transport

CAUTION: Additional front ballast may be needed for transporting rear-mounted implements. When implement is raised, drive slowly over rough ground, regardless of how much ballast is used.

CAUTION: Weights are heavy. Use proper lifting equipment. Approximate weight of starter weight (C). Approximate weight of QUIK-TATCH™ weights (D).

Specification

C - Starter Weight (Ballast)—Weight..... 55 kg (121 lb) Each
D - QUIK-TATCH™ Weight (Ballast)—Weight..... 45 kg (99 lb) Each

Installing QUIK-TATCH™ Weights: QUIK-TATCH™ weights can be installed on the front of the tractor.

One starter weight and up to eight QUIK-TATCH™ weights can be installed.

1. Install weights in pairs, one on each side of center (A).

QUIK-TATCH is a trademark of Deere & Company

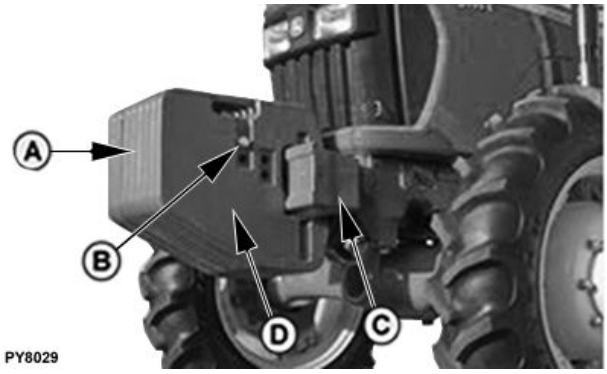

PY8029 —UN—16JUL08

A—Ballast Center
B—Ballast Retaining Bolts
C—Starter Weight
D—QUIK-TATCH Weights

2. To hold weights in place, run retaining bolts (B) through holes from side-to-side. Tighten to specification.

Specification

Ballast Weights Retaining Bolts—Torque..... 230 N·m (170 lb-ft)
Starter Weight Bolts—Torque..... 385 N·m (284 lb-ft)

RM87422,0000695 -19-29JUN17-1/1

Ballast Two-Wheel Drive Tractors

Add weight to the front end if needed for stability. Heavy pulling and heavy rear-mounted implements tend to lift front wheels. To maintain steering control and prevent the tip-over, add enough amount of ballast.

Refer to the implement operator's manual, along with “Use Implement Codes” in this section. This section determines the minimum number of front weights that are required for the tractor model.

SA61034,0000239 -19-17MAR20-1/1

Ballast MFWD-Equipped Tractors

Ideal tire slippage for MFWD-equipped tractors is 8—12 %. To reduce the wheel slip to this level, more weight is needed on the front than with two-wheel-drive tractors. The ideal weight split is 40 % front, 60 % rear, of total tractor weight. In some cases, liquid ballast is needed in front tires to obtain this weight split.

NOTE: Implement codes are used to determine proper ballast for stability and steering control. Refer to the implement code in the implement operator manual, along with “Use Implement Codes” in this section, it determines the minimum number of front weights that are required for the tractor model. In some cases, additional front ballast is required for optimum field performance. If more assistance is needed, see nearest John Deere dealer.

PY05032,0000132 -19-17MAR20-1/1

Determine Maximum Rear Ballast

IMPORTANT: DO NOT overload tires. If maximum weight shown in chart is not enough for safety, reduce load or install heavier ply tires.

To extend drive train life, avoid excessive soil compaction and rolling resistance, avoid adding too much ballast. Ballast should never exceed the weight required to provide traction for continuous full power loads in 3rd gear for 2-WD tractors. Remove ballast if tractor engine labors when pulling heavy loads in the first three gears. When using mechanical front wheel drive, ballasting to one gear slower is appropriate.

MAXIMUM LOAD PER WHEEL			
Tire Size Bias Ply Tires	Ply Rating	Capacity kg (lb)	Speed kph (mph)
13.6-28	**6**	**1284 (2830)**	**40 (25)**
14.9-28	6	1451 (3200)	40 (25)
16.9-28	6	1651 (3640)	40 (25)
16.9-24	6	2240 (4940)	40 (25)
21.5L-16	6	1252 (2760)	40 (25)
21.5L-16.1	6	1700 (3748)	15 (09)

Chart shows carrying capacity per tire.

RM87422,00006B3 -19-24MAY17-1/1

Determine Maximum Front Ballast

Use appropriate front ballast for a particular operating condition. MFWD equipped tractors should have adequate ballast to properly load front wheels. Remove ballast when it is no longer needed.

Chart shows carrying capacity per tire.

IMPORTANT: DO NOT overload tires. If maximum weight shown in chart is not enough for safety, reduce load or install tires with a higher load rating.

	MAXIMUM LOAD PER WHEEL			
	Tire Size	Ply Rating	Capacity kg (lb)	Speed kph (mph)
2WD	7.50-16	6	750 (1650)	40 (25)
	27/12LL-15	6	1180 (2601)	15 (09)
	11L-15	8	948 (2090)	40 (25)
MFWD	9.5-24	6	848 (1870)	40 (25)
	9.5-16	6	630 (1690)	40 (25)
	12.5/8-18	6	1470 (3240)	15 (09)

RM87422,00006B4 -19-24MAY17-1/1

Use Cast Iron Weights

Cast iron weights are available in a 48 kg (106 lb) size. Weights can be installed on the inside or outside of wheel. See nearest John Deere dealer for more information and recommendations on weight use and placement.

Specification

Cast Iron Weights—Weight..... 48 kg (106 lb)

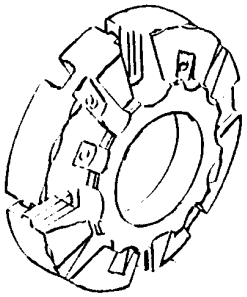

M47215 —UN—29JAN92

SA61034,000023C -19-17MAR20-1/1

Install Rear Cast Iron Weights

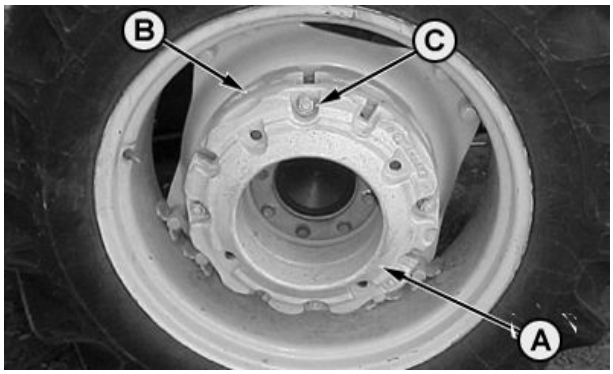

PY1635 —UN—17FEB06

A—Additional Weight

B—Weight
C—Weight Holes

CAUTION: Optional cast iron weight weighs 48 kg (106 lb). Handle with care. Use appropriate equipment or have the job done by nearest John Deere dealer.

1. To install additional weight (A) on wheel, it is necessary to remove wheel. (See Wheels, Tires, and Treads section.)
2. Attach first weight to wheel disks.
3. To install additional weights (A), install bolts in previous weight (B). To align bolts with weight holes (C), rotate the added weight.
4. Tighten attaching bolts securely. Tighten again after a few hours service. Check tightness regularly.

LV,5010B,B -19-18MAR20-1/1

Use Liquid Weight

CAUTION: Installing liquid ballast requires special equipment and training. Have the job done by your John Deere dealer or a tire service store.

IMPORTANT: NEVER fill tire to more than 90 percent full. More solution would leave too little air space to absorb shocks. Damage to tire could occur.

A solution of water and calcium chloride provides safe, economical ballast. Used properly, it will not damage tires, tubes, or rims.

Use calcium chloride to prevent water from freezing. A mixture of 0.4 kg per liter (3.5 lb of calcium chloride per gal) will not freeze solid above —45°C (—50°F).

NOTE: Use of alcohol as liquid ballast is not recommended. Calcium chloride solution is heavier and more economical.

Fill tubeless tires slightly above valve level (minimum 75 percent full). Less solution would expose part of rim, possibly causing corrosion. Tube-type tires may be filled to any level below 90 percent.

Charts on this page show how much each tire size holds if filled to 75 percent full.

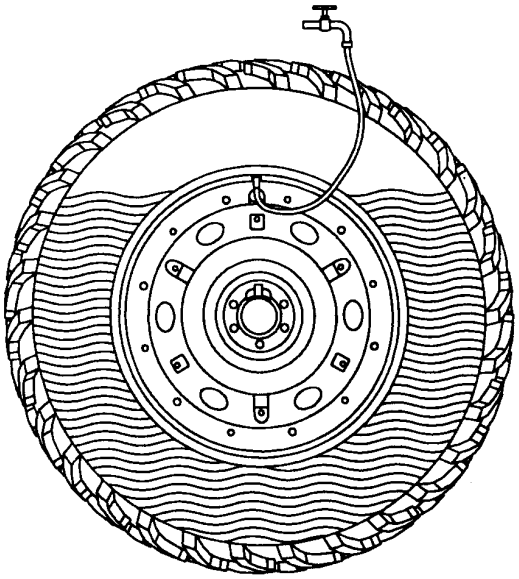

RW25003 —UN—07JUL93

LIQUID WEIGHT FOR TIRES With 0.6 kg/L (5 lb/gal) Calcium Chloride Solution		
	Tire Size	**Liquid Weight per Tire kg (lb)—75% Full**
2WD	7.50-16	49 (107)
	27/12LL-15	37 (82)
	11L-15	67 (147)
MFWD	9.5-24	85 (187)
	9.5-16	61 (133)
	12.5/8-18	--
Rear	13.6-28	211 (467)
	14.9-28	260 (574)
	16.9-28	339 (747)
	16.9-24	297 (654)
	21.5L-16.1	306 (675)
	22.5LL-16.1	--

RM87422,00006B5 -19-24MAY17-1/1

Use Implement Codes

CAUTION: DO NOT attempt to transport an implement without adequate front ballast. Lack of steering control may result.

John Deere engineers have developed a code to determine how much front ballast is needed for stability and steering control.

1. Find implement code in implement operators manual.
2. Use the following chart to determine how many QUIK-TATCH™ front weights are required on your tractor model.

   To use chart, find the implement code range in the left-hand column into which your implement code fits. Then move to the right until you are beneath the column which identifies your tractor configuration. The number you find at this point in the chart is the number of QUIK-TATCH™ weights needed.

   For example, an implement with a code 100 to be used on an MFWD tractor with a quick-coupler, but without liquid in the front tires, requires 4 front weights.

   With maximum front ballast, do not attempt to transport an implement whose code exceeds:

   - 115 for 2-WD Tractor
   - 137 for MFWD Tractor

NUMBER OF QUIK-TATCH™ WEIGHTS NEEDED		
2-WD		
Implement Code	**Without Liquid in Front Tires**	**With Liquid in Front Tires**
0—65	0	—
66—75	2	0
76—85	4	2
86—95	6	4
96—105	8	6
106—115	—	8
MFWD		
Implement Code	**Without Liquid in Front Tires**	**With Liquid in Front Tires**
0—87	0	—
88—97	2	0
98—107	4	2
108—117	6	4
118—127	8	6
128—137	—	8

QUIK-TATCH is a trademark of Deere & Company.

SA61034,000023E -19-29FEB08-1/1

Service Tires Safely

Explosive separation of a tire and rim parts can cause serious injury or death.

Do not attempt to mount a tire unless you have the proper equipment and experience to perform the job.

Always maintain the correct tire pressure. Do not inflate the tires above the recommended pressure. Never weld or heat a wheel and tire assembly. The heat can cause an increase in air pressure resulting in a tire explosion. Welding can structurally weaken or deform the wheel.

When inflating tires, use a clip-on chuck and extension hose long enough to allow you to stand to one side and NOT in front of or over the tire assembly. Use a safety cage if available.

Check wheels for low pressure, cuts, bubbles, damaged rims or missing lug bolts and nuts.

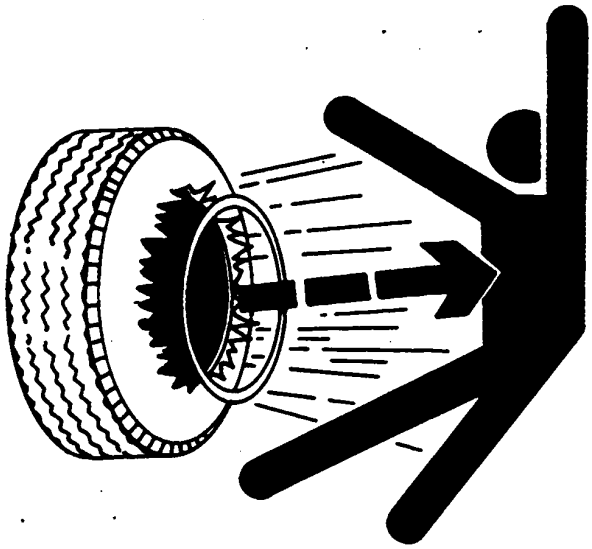

TS211 —UN—15APR13

DX,RIM -19-24AUG90-1/1

Check Implement-to-Tire Clearance

IMPORTANT: Check for adequate clearance (A) between outside diameter of the tire and implement with hitch in raised position.

When large diameter rear tires are installed on a tractor with a 3-Point Hitch, a quick coupler or similar device is required to provide adequate implement-to-tire clearance.

A—Clearance

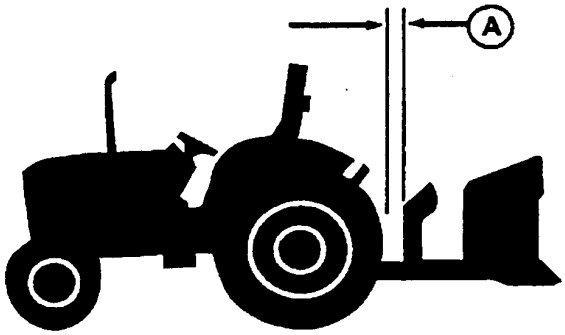

M47177 —UN—31JAN92

MX,WTIP,AA1 -19-21APR94-1/1

Check Tire Inflation Pressure

Check tires daily for damage or noticeably low pressure.

At least every 100 hours of operation, check inflation pressure with a gauge. Use an accurate gauge having 10 kPa (0.1 bar) (1 psi) graduations.

If tires contain liquid ballast, use a special air-water gauge and measure with valve stem at bottom.

NOTE: When furrow plowing or during hillside operation, tire pressure can be increased 28 kPa (0.28 bar) (4 psi) ABOVE maximum to prevent tire wrinkling or buckling.

IMPORTANT: Always check inflation pressure with an accurate tire gauge to prevent over-inflation. Over-inflation reduces performance and increases strain of both tire and rim.

NOTE: Following inflation information applies to both front and rear tires and Tire Inflation Pressure Chart.

1. All inflation pressures are calculated for 29 km/h (18 mph) travel speeds for both diagonal (bias) ply and radial ply tires.
2. Operation of tires at the inflation pressures listed on chart will result in optimum tractive performance of the tire/vehicle system. Correctly inflated radial tires will show a large deflection of the sidewall or “cheeks”. This is normal and will not hurt the tire if the inflation pressure is maintained.
3. Inflation pressures less than 80 kPa (12 psi) should be monitored regularly because of the increased risk of low pressure air leaks (especially due to leaking valve cores).
4. Tractors operating on steep side slopes should increase inflation pressures 28 kPa (4 psi) above the values listed to compensate for lateral weight transfer.
5. Tires run as singles in high traction conditions sometimes experience bead slip if the bead was not fully seated or if too much lubricant was used to mount the tire. Increasing the inflation pressure will compensate for this condition but will not cause reduced traction. Consult your tire dealer if this problem occurs.
6. If higher load capacities are needed, contact your John Deere dealer for tire manufacturers load and inflation table information.

MX,WTIP,BA1 -19-29JUL94-1/1

Tire Inflation Pressure Chart

Front Tires			With Little or No Added Weight			With Maximum Ballast or Heavy Mounted Implement		
Tire Size	**Ply Rating**	**Tread**	**kPa**	**(bar)**	**(psi)**	**kPa**	**(bar)**	**(psi)**
2WD								
7.50-16	6	F2	170	1.7	24	303	3	44
11L-15	8	F3	170	1.7	24	303	3	44
27/12-15	6	Turf Special	69	(0.69)	(10)	220	2.2	32
MFWD								
9.5-24	6	R1	83	0.83	12	207	2.1	30
9.5-16	6	R3	83	0.83	12	207	2.1	30
12.5/80-18	6	R4	103	1.03	15	193	1.93	28
Rear Tires			**With Little or No Added Weight**			**With Maximum Ballast or Heavy Mounted Implement**		
Tire Size	**Ply Rating**	**Tread**	**kPa**	**(bar)**	**(psi)**	**kPa**	**(bar)**	**(psi)**
13.6-28	6	R1	83	0.83	12	179	1.79	22
14.9-28	6	R1	83	0.83	12	140	1.4	20
16.9-28	6	R1	83	0.83	12	124	1.24	18
16.9-24	6	R4	83	0.83	12	179	1.79	22
21.5L-16	6	R3	83	0.83	12	83	0.83	12
22.5LL-16.1	6	R3	41	0.41	6	124	1.24	18

RM87422,0000699 -19-24MAY17-1/1

Select Front Tire Rolling Direction

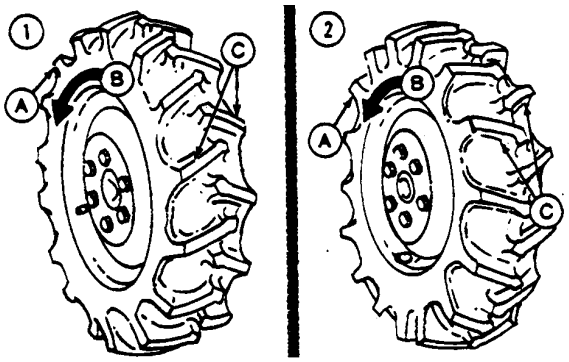

RW510 —UN—06APR89

Left Tire (Viewed From Rear)

A—Front Tire (Viewed from Rear) B—Rolling Direction of Tire C—Tire Lugs

1. Under most conditions, front tires (A) is mounted with the direction of tire lugs (C) the same as the rolling direction of tire (B).
2. If the tractor is used for loader operations, lug direction can be reversed on the MFWD axle to reduce tire wear.

SD74272,0000332 -19-24MAR20-1/1

Tighten Wheel/Axle Hardware Correctly

CAUTION: NEVER operate tractor with a loose rim, wheel, hub, or axle.

Any time hardware is loosened, tighten to specified torque.

NOTE: Follow checking procedure when a new tractor is first used, or wheels have been off.

1. After driving tractor about 100 m (109 yd), and before placing it under load, tighten hardware to specified torque.
2. Check hardware after working three hours and again after 10 hours.
3. Check all hardware frequently and keep it tight.

LV,5010WT,I -19-09SEP97-1/1

Tighten Bolts—Adjustable Front Axle

Tighten bolts in the following locations to specifications:

	Specification
Adjustable Front Axle—Axle-to-Knee Nuts—Torque	400 N·m (295 lb·ft)
Adjustable Front Axle—Disk-to-Flange Bolts—Torque	175 N·m (129 lb·ft)

A—Axle-To-Knee **B—Disk-To-Flange**

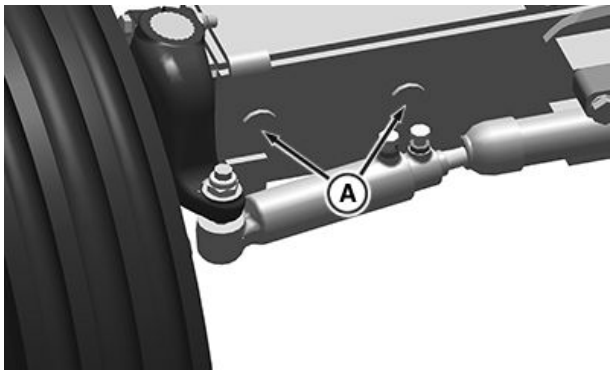

PY40203 —UN—13FEB17

Axle-to-Knee Bolts

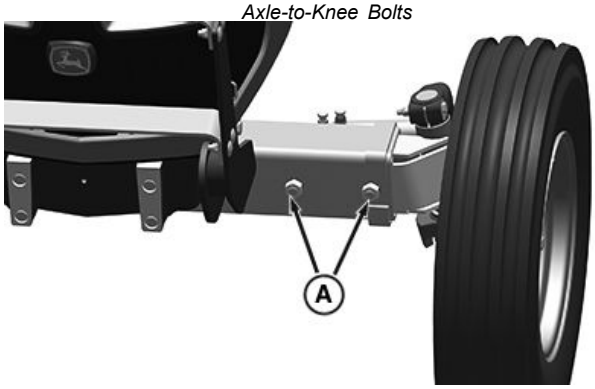

PY40212 —UN—13FEB17

Axle-to-Knee Nuts

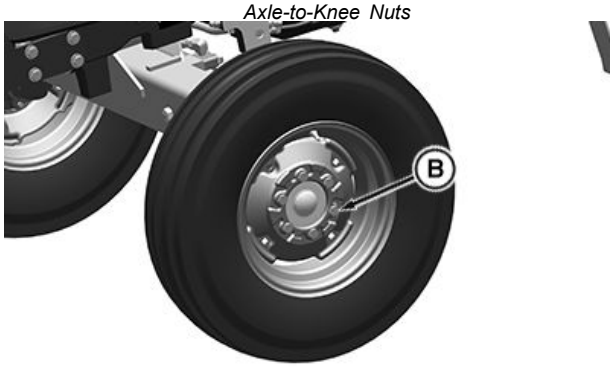

PY40202 —UN—13FEB17

Disk-to-Flange Bolts

VP27597,0000350 -19-13FEB17-1/1

Tighten Wheel Bolts—MFWD Axle

Tighten hardware (A and B) to specifications.

Specification	
MFWD Wheel Rim-to-Disk Nuts (A)—Torque	225 +/- 49 N•m (166 +/- 36 lb·ft)
MFWD Wheel Disk-to-Hub Nuts (B)—Torque	300 N•m (221 lb·ft)

A—MFWD Wheel Rim-to-Disk Nuts

B—MFWD Wheel Disk-to-Hub Nuts

PY40201 —UN—13FEB17

MFWD Wheel Nuts

VP27597,0000351 -19-13FEB17-1/1

Tighten Wheel Bolts—Rear Axle

Tighten bolts (A and B) to specifications.

Specification	
Rear Wheel Rim-to-Disk Bolts (A)—Torque	245 N·m (180 lb·ft)
Rear Steel Wheel Disk-to-Hub Bolts (B)—Torque	510 N·m (376 lb·ft)

A—Rear Wheel Rim-to-Disk Bolts

B—Rear Wheel Disk-to-Hub Bolts

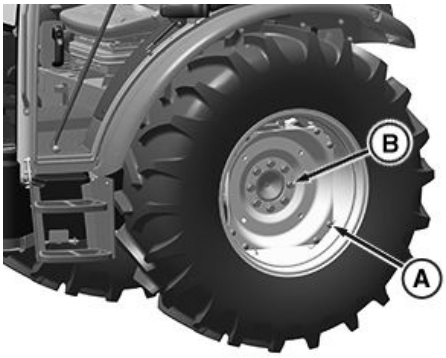

PY40204 —UN—13FEB17

Rear Wheel Bolts

VP27597,0000352 -19-13FEB17-1/1

Observe Rear Wheel Tread Width Limitations

IMPORTANT: Clearance between tires and fenders (A) must be at least 25 mm (1 in). When large diameter rear tires are installed, check clearance between the tire and fenders.

A—Clearance Between Tires and Fenders

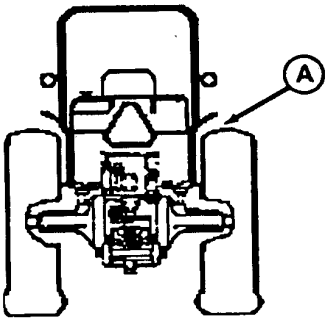

M47179 —UN—31JAN92

AH98466,0000971 -19-17MAR20-1/1

Tread Settings—Two-Position Rear Wheels

Wheel tread can be adjusted by exchanging the wheels from side-to-side and by using spacers.

The relationship of the wheels is shown in the diagrams.

IMPORTANT: After setting wheel spacing, tighten rear wheel disk-to-hub bolts to specification. Drive tractor 100 m (109 yd) and tighten again.

Rear Wheel -Specification—Specification

Rear Wheel Rim-to-Disk Nuts—Torque..... 245 N.m (180 lb.ft)

Rear Wheel Disk-to-Flange Bolts—Torque..... 550 N.m (406 lb.ft)

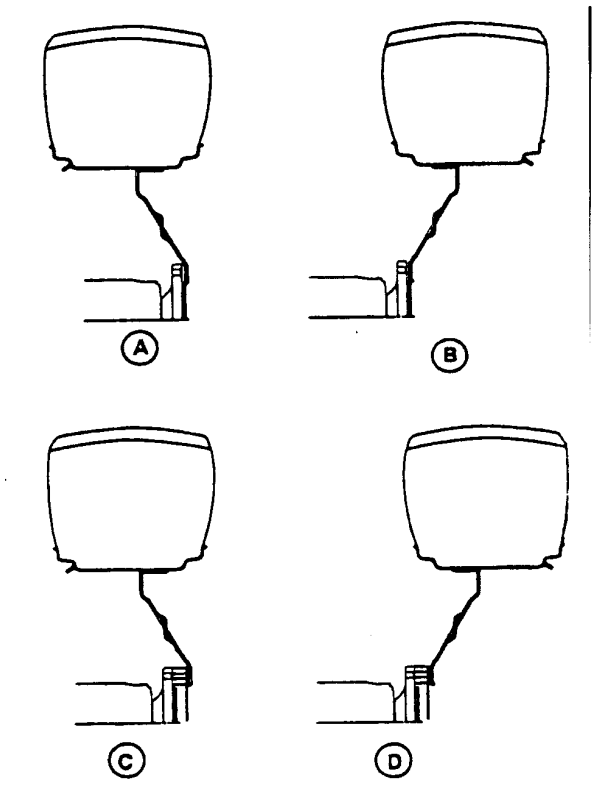

M47178 —UN—31JAN92

TWO-POSITION REAR WHEELS—TREAD WIDTH (Centerline-to-Centerline)								
	No Spacer		30 mm Spacer		44 mm Spacer		111 mm Spacer	
Tire	A	B	C	D	C	D	C	D
21.5L-16.1 6PR R3	INT[a]	1658 mm (65.3 in.)	INT[a]	1718 mm (67.6 in.)	INT[a]	1746 mm (68.7 in.)	1495 mm (58.9 in.)	1880 mm (74.0 in.)
[a]Interference (Do not use)								

SA61034,000029E -19-06MAR08-1/1

Tread Settings—Multi-Position Rear Wheels

Wheel tread on rear axle with multi-position wheels can be adjusted by repositioning or exchanging the rims or by reversing the wheel disks.

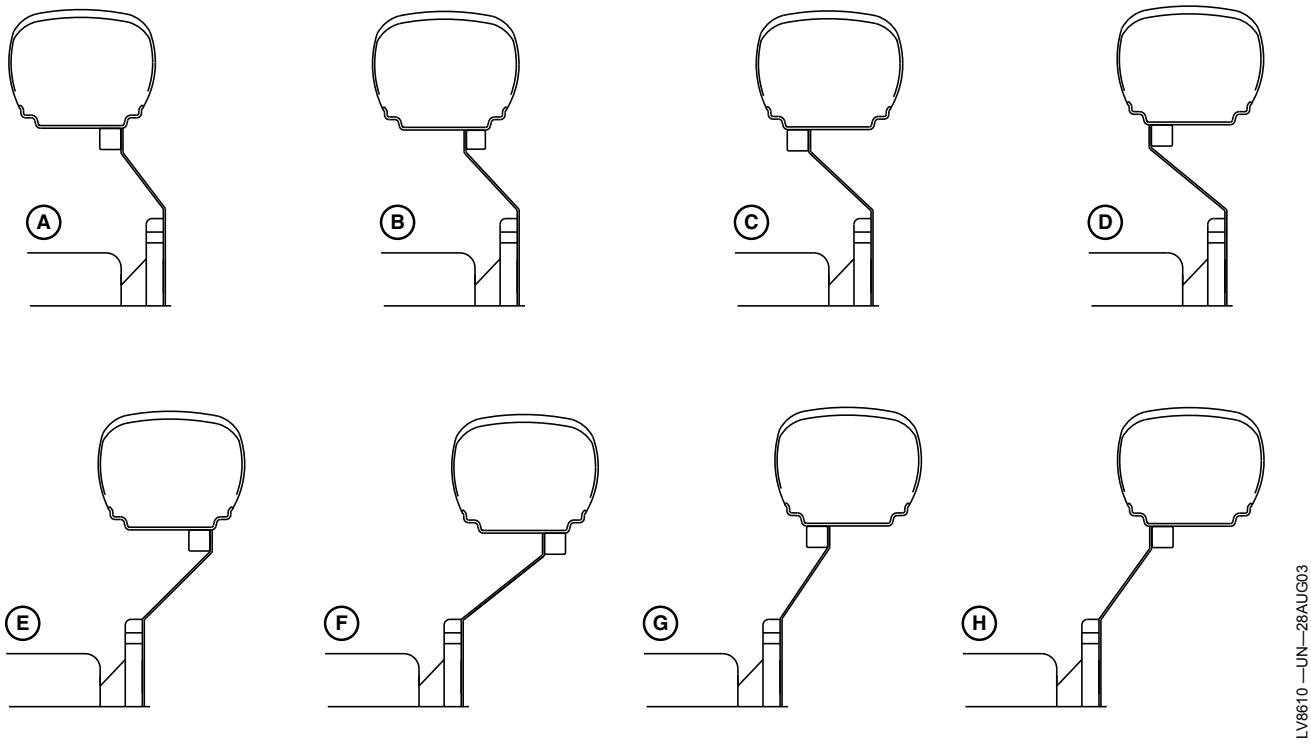

Tread Settings—Multi-Position Rear Wheels

Wheel tread can also be adjusted by exchanging the complete wheel to the opposite side of the tractor. (This maneuver permits the change from disk-dished-in to disk-dished-out operations without disassembling the wheel). When changing rear wheels from one side to the other, the arrow on side wall of tire points in the direction of forward rotation.

The relationship of the wheel disk and rim in obtaining the different tread settings is shown in the diagrams, on the facing page.

A study of these diagrams, before attempting to change tread settings, will save unnecessary labor.

IMPORTANT: After setting wheel spacing, tighten rim-to-disk and disk-to-flange bolts. Drive tractor 100 m (109 yd) and tighten again.

Item	Measurement	Specification
Rear Wheel -Specification		
Rear Wheel Rim-to-Disk	Torque	245 N.m (180 lb.ft)
Rear Wheel Disk-to- Hub	Torque	550 N.m (406 lb.ft)

NOTE: Tread settings are measured at bottom of centerline.

NOTE: 30 mm, 44 mm, and 111 mm spacer are available. Adjust dimensions accordingly if used.

MULTI-POSTION REAR WHEELS TREAD WIDTH (Centerline-to-Centerline)								
	Diagram							
Tire	A	B	C	D	E	F	G	H

Continued on next page

NM61126,000050D -19-24AUG17-1/2

MULTI-POSTION REAR WHEELS TREAD WIDTH (Centerline-to-Centerline)								
14.9-28	INT[a]	INT[a]	INT[a]	1417 mm (55.8 in.)	1512 mm (59.5 in.)	1617 mm (63.7 in.)	1715 mm (67.5 in.)	1820 mm (71.1 in.)
16.9-28	INT[a]	INT[a]	INT[a]	INT[a]	1512 mm (59.5 in.)	1617 mm (63.7 in.)	1715 mm (67.5 in.)	1820 mm (71.1 in.)
16.9-24	INT[a]	INT[a]	INT[a]	1417 mm (55.8 in.)	1512 mm (59.5 in.)	1617 mm (63.7 in.)	1715 mm (67.5 in.)	1820 mm (71.1 in.)
[a]Interference (Do not use)								

Rear Tread Width

NM61126,000050D -19-24AUG17-2/2

Tread Settings—Adjustable Front Axle

Front rims are offset. With some tires, this provides two tread spacings, at each axle setting.

A—Beam Adjustment Nut

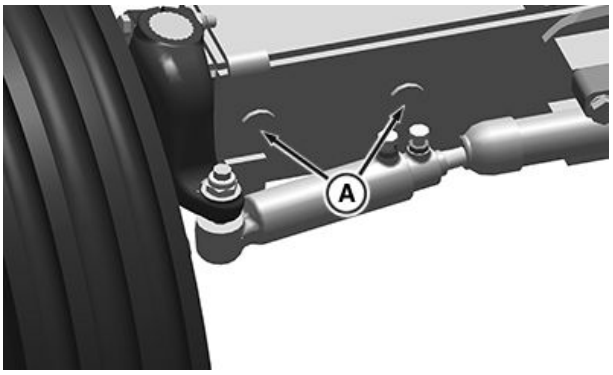

PY40203 —UN—13FEB17

Axle Pin Position

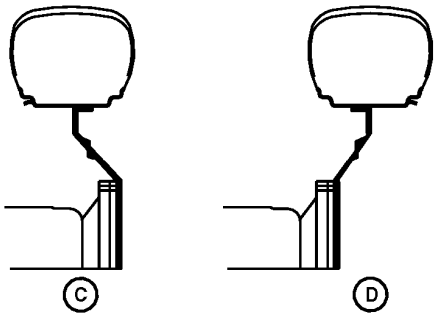

LV1515 —UN—05MAR96

ADJUSTABLE FRONT AXLE TREAD SETTINGS Diagram C Centerline-to-Centerline						
	Tread Position[a]					
Tire	1	2	3	4	5	6
7.5-16	1449 mm (57.0 in.)	1549 (61.0 in.)	1649 (64.9 in.)	1749 (68.9 in)	1849 (72.8 in.)	1949 (76.7 in.)
27/12-15 11L-15	1488 mm (58.6 in.)	1588 mm (62.5 in.)	1688 mm (66.5 in.)	1788 mm (70.4 in.)	1888 mm (74.3 in.)	1988 mm (78.3 in.)
[a]Tread position 1 is with axle adjustment at its most inward location. See adjust Front Axle Tread Width in this section.						

ADJUSTABLE FRONT AXLE TREAD SETTINGS Diagram D Centerline-to-Centerline						
	Tread Position[a]					
Tire	1	2	3	4	5	6
7.5-16	1583 (62.3 in.)	1683 mm (66.3 in.)	1783 mm (70.2 in.)	1883 mm (74.1 in.)	1983 mm (78.1 in.)	2083 mm (82.0 in.)
27/12-15 11L-15	1571 mm (61.9 in.)	1671 mm (65.8 in.)	1771 mm (69.7 in.)	1871 mm (73.7 in.)	1971 mm (77.6 in.)	2071 mm (81.5 in.)
[a]Tread position 1 is with axle adjustment at its most inward location. See adjust Front Axle Tread Width in this section.						

VP27597,0000353 -19-13FEB17-1/1

Tread Settings—Multi-Position MFWD Wheels

Wheel tread on MFWD axle with multi-position wheels can be adjusted by repositioning or exchanging the rims or by reversing the wheel disks.

Wheel tread can also be adjusted by exchanging the complete wheel to the opposite side of the tractor. (This maneuver permits the change from disk-dished-in to disk-dished-out operations without disassembling the wheel). When changing MFWD wheels from one side to the other, the arrow on side wall of tire points in the direction of forward rotation. In certain applications, MFWD equipped tractors may operate with the arrows in the opposite direction. (See Selecting Front Tire Rolling Direction in this section.)

The relationship of the wheel disk and rim in obtaining the different tread settings is shown in the diagrams. A study of these diagrams, before attempting to change tread settings, will save unnecessary labor.

Tread settings are measured at the middle of the tires at axle height..

IMPORTANT: After setting wheel spacing, tighten MFWD wheel rim-to-disk bolts and MFWD wheel disk-to-hub bolts to specification. Drive tractor 100 m (109 yd) and tighten again.

Specification	
MFWD Wheel Rim-to-Disk Bolts—Torque	245 N·m (180 lb-ft)
MFWD Wheel Disk-to-Hub Nuts—Torque	310 N·m (228 lb-ft)

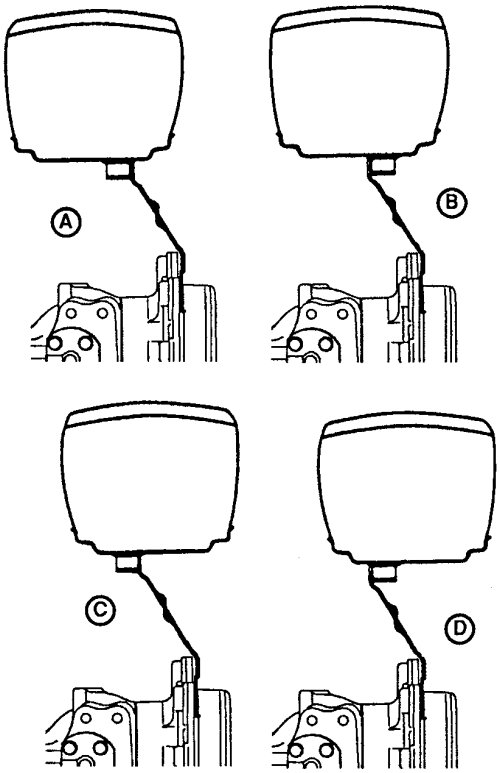

LV601 —UN—22APR94

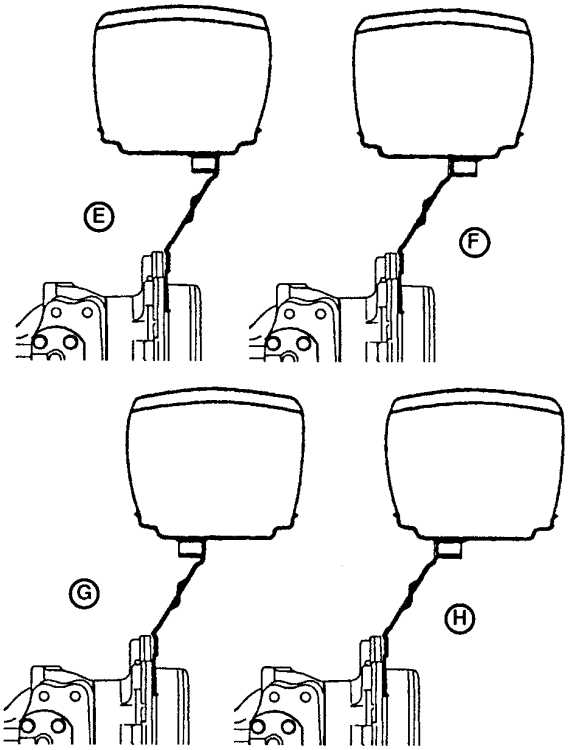

LV602 —UN—22APR94

Continued on next page

SK35149,00003D4 -19-24JUL14-1/2

MULTI-POSITION MFWD WHEELS—TREAD WIDTH (Centerline-to-Centerline)								
	Diagram							
Tire	A	B	C	D	E	F	G	H
9.5-24 6PR R1	1457 mm (57.4 in.)	1567 mm (61.7 in.)	1548 mm (60.9 in.)	1632 mm (64.3 in.)	1655 mm (65.1 in.)	1778 mm (70 in.)	1749 mm (68.9 in.)	1860 mm (73.2 in.)
9.5-16 6PR R3	INT*	N/A	N/A	N/A	1730 mm (68.1 in.)	N/A	N/A	N/A
12.5/80-18 10PR R4	1531 mm (60.27 in.)	1699 mm (66.88 in)	N/A	N/A	N/A	N/A	N/A	N/A
*Interference (Do not use)								

SK35149,00003D4 -19-24JUL14-2/2

Adjust Front Axle Tread Width

IMPORTANT: DO NOT place jack under the engine oil pan.

1. Jack up the front end of tractor.
2. When making large tread adjustments it may be necessary to change the tie rod length (A) before or during axle adjustments. (See Check and Adjust Toe-In for your axle type.)
3. Remove four nuts (B) and tapered bolts (C) from the front axle (2 on each side).
4. Slide axle knees to desired position. Both sides must be adjusted to same spacing.
5. Reinstall axle nuts (B) and bolts(C) on each side. Tighten bolts to specification.

Specification

Front Axle
Nuts—Torque..... 400 N·m (295 lb·ft)

6. Set toe-in. (See Check and Adjust Toe-In for your axle type.)

A—Tie Rod
B—Nuts (4 used)
C—Tapered Bolt (4 used)

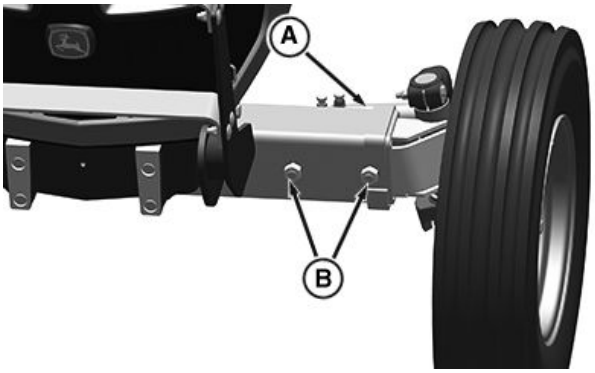

PY40211 —UN—13FEB17

Tie Rod Length and Nuts

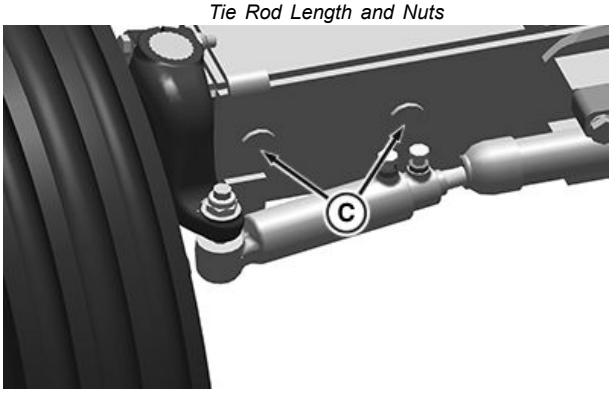

PY40210 —UN—13FEB17

Pins and Companion Holes

VP27597,0000354 -19-13FEB17-1/1

Check Toe-In (Two-Wheel Drive Tractor)

1. Park machine on the level surface.
2. Turn steering wheel so front wheels are in the straight-ahead position. Stop engine.
3. Measure distance (A) between tires at the hub level in the front of the axle. Record measurement and mark the tires.
4. Move tractor back about 1 m (3 ft), so mark is at the hub level behind the axle. Again, measure distance between tires at same point on tire. Record measurement.
5. Determine the difference between front and rear measurements. If the front measurement is smaller, toe is “in”. If the rear is smaller, toe is “out”.
6. Distance (A) between the front of tires must be 3—6 mm (1/8—1/4 in.) less than distance measured at rear of the tires. Adjust toe-in if necessary. (See procedure in this section.)

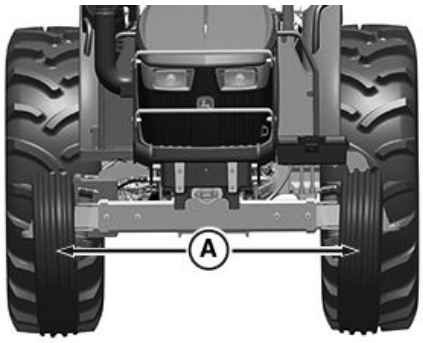

PY40208 —UN—13FEB17

Two-Wheel Drive Axle

A—Front Axle Toe-In Distance

VP27597,0000355 -19-13FEB17-1/1

Adjust Toe-In (Two-Wheel Drive Tractor)

1. Loosen lock nuts (A) and back out the bolts (B) on tie rod tubes several turns.
2. Adjust tie rods on both sides of the tractor equally by rotating the inner tube (C) to lengthen or shorten tie rod. Adjust toe-in to 8 to 16 mm (5/16 to 5/8 in.)

Tie Rod Rotation	Approximate Change in Toe-in
1/2 turn	8 mm (5/16 in.)
1 turn	16 mm (5/8 in.)

3. Tighten bolts (B) to specification. Do not overtighten as damage to the tube may occur.

Specification

Tie Rod Bolts—Torque..... 90 N·m (66 lb·ft)

4. Tighten the lock nuts (A) to specification.

Specification

Tie Rod Lock Nuts—Torque..... 60 N·m (44 lb·ft)

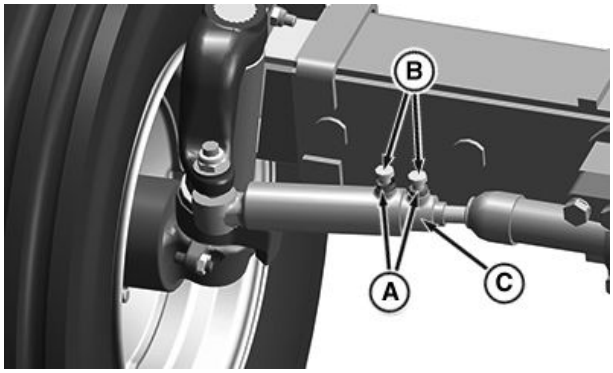

PY40209 —UN—13FEB17

Lock Nuts, Bolts, and Inner Tube

A—Lock Nuts
B—Tie Rod Bolts
C—Inner Tube

VP27597,0000356 -19-13FEB17-1/1

Check Toe-In — MFWD Axle

1. Disengage MFWD and park tractor on smooth, level surface. Steer front wheels straight ahead. Stop engine.
2. Measure distance (A) between the centerline of tires at the hub level in the front of the axle, using an outside bar of each tire or an inside bar of each tire. Record measurement and mark the tires.
3. Move tractor back about 1 m (3 ft), so mark is at the hub level behind the axle. Again, measure distance between tires at same point on tire. Record measurement.
4. Determine the difference between front and rear measurements. If the front measurement is smaller, toe is IN. If the rear is smaller, toe is OUT. The difference may be in either direction (toe-in or toe-out), but it must be less than 3 mm (1/8 in.). Adjust toe-in if necessary. (See procedure in this section.)

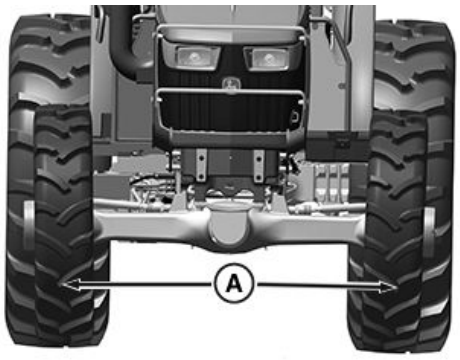

PY40205 —UN—13FEB17

Distance Between Centerline

A—MFWD Axle Toe-In Distance

VP27597,0000357 -19-13FEB17-1/1

Adjust Toe-In—MFWD Axle

1. Loosen lock nuts (A) on both ends of tie rod.
2. Adjust both sides equally by rotating the inner rod (B) to lengthen or shorten the tie rod, as needed, to obtain toe-in or toe-out of less than 3 mm (1/8 in.).

Tie Rod Rotation	Approximate Change
1/8 turn	4 mm (3/16 in.)
1/4 turn	8 mm (3/8 in.)
1/2 turn	16 mm (5/8 in.)

3. Tighten lock nuts to specification.

Specification

Lock Nuts—Torque.....220 – 240 N·m (162 – 177 lb·ft)

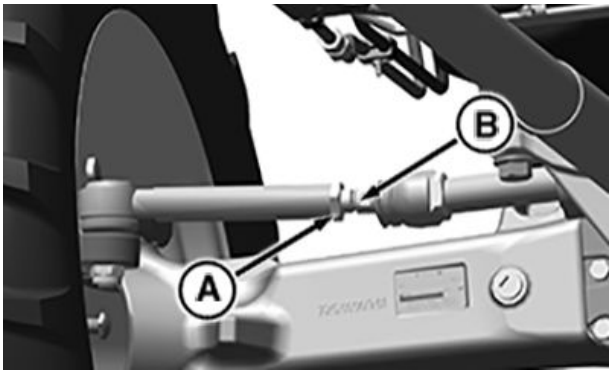

PY40206 —UN—13FEB17

Adjust Toe-In—MFWD Axle

A—Tie Rod Lock Nuts **B—Inner Rod**

VP27597,0000358 -19-13FEB17-1/1

Steering Angle - CARRARO

IMPORTANT: Bush needs to be removed to increase the steering angle from 46 degree till 60 degree.

A—Bushing

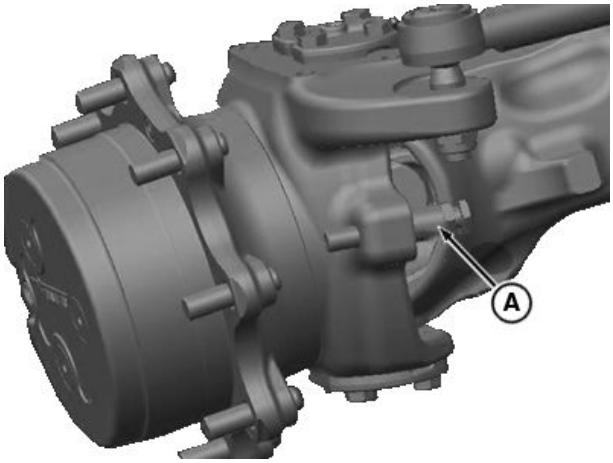

PY44480 —UN—03AUG17

SJ15074,0000302 -19-04AUG17-1/1

Set MFWD Steering Stops Turning Radius

1. Raise and support the front of the tractor so the MFWD axle can be oscillated to its stops.
2. Slowly turn the steering wheel to the left until the steering cylinder travel has reached its limit, the steering stops, or the tires are within 25 mm (1 in.) of the grille screen or the side panels.
3. Raise the left side of the axle against its stop and measure the clearance between the tire and the nearest tractor component. The distance might not be less than 25 mm (1 in.).
4. Loosen the locking nut (A) on the steering stop and adjust the steering stop bolt (B) so it touches the steering stop (C). It may be necessary to shorten the stop bolt (B) in order to obtain the maximum turning angle.
5. Tighten steering stop bolt retaining lock nut (A) as per specification.
6. Turn wheel fully to the left. Impact knuckle housing to steering stop five times.
7. Tighten steering stop bolt retaining nuts again to specification.

Specification	
Steering Stop Bolt Retaining Lock Nut—Torque	125 N·m (92 lb·ft)

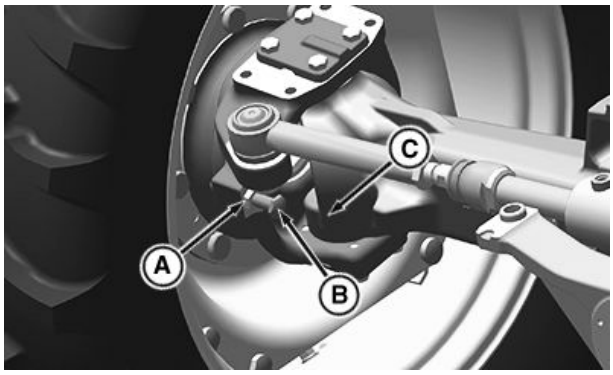

PY40207 —UN—13FEB17

Set MFWD Steering Stops Turning Radius

A—Steering Stop Locking Nut
B—Steering Stop Bolt
C—Steering Stop

8. Repeat the steps for the right side.

NOTE: Wide tread settings and large tire sizes increase turn radius slightly.

VP27597,0000359 -19-13FEB17-1/1

Use Correct Tire Combinations

In order to achieve maximum drawbar pull, maintain proper steerability, reduce tire wear and fuel consumption, comply with the correct tire combinations shown on Tire Compatibility Chart.

Should mechanical front wheel drive front tires show excessive wear in comparison with rear tire, the front tires must be replaced in order to maintain the predetermined tire ratio.

IMPORTANT: When replacing tires, consult your tire dealer. Mixing worn and new tires, bias and radial or tires of different diameters or loaded radii can reduce tire life and overall tractor performance.

Using any tire combination, other than those listed on the Tire Compatibility Chart, could result in premature tire and driveline wear due to excessive underspeed or overspeed.

MX,WTIP,OA1A -19-24JUL95-1/1

Tire Compatibility Chart

NOTE: The following chart details which front tires are compatible with an available rear tire. The rear tires are indicated above the compatible front tires, for MFWD along with the relevant tractor model.

Rear Tire	Front Tire	5045E	5055E	5065E	5075E
2WD					
13.6-28 In. 6PR R1 Bias	7.50-16 In. 6PR F2 Bias	Yes	--	--	--
14.9-28 In. 6PR R1 Bias		Yes	Yes	--	--
16.9-28 In. 6PR R1 Bias		Yes	Yes	Yes	Yes
16.9-24 In. 6PR R4 Bias	11LL-15 In. 8PR F3 (Truck Type) Bias	Yes	Yes	--	--
21.5L-16.1 In. 6PR R3 Bias	27/12LL-15 In. 6PR Turf Special Bias	Yes	Yes	Yes	Yes
22.5LL-16.1 In. 6PR R3 (Turf Special) Bias		Yes	Yes	Yes	Yes
MFWD					
13.6-28 In. 6PR R1 Bias	9.5-24 In. 6PR R1 Bias	Yes	--	--	--
14.9-28 In. 6PR R1 Bias		Yes	Yes	--	--
16.9-28 In. 6PR R1 Bias		Yes	Yes	Yes	Yes
16.9-24 In. 6PR R4 Bias	12.5/80-18 In. 6PR I3(R4 Type) Bias	Yes	Yes	Yes	Yes
21.5L-16.1 In. 6PR R3 Bias	9.5-16 In. 6PR R3 Bias	Yes	Yes	Yes	Yes

RM87422,00006B6 -19-24MAY17-1/1

Use Safety Lights and Devices

Prevent collisions between other road users, slow moving tractors with attachments or towed equipment, and self-propelled machines on public roads. Frequently check for traffic from the rear, especially in turns, and use turn signal lights.

Use headlights, flashing warning lights, and turn signals day and night. Follow local regulations for equipment lighting and marking. Keep lighting and marking visible, clean, and in good working order. Replace or repair lighting and marking that has been damaged or lost. An implement safety lighting kit is available from your John Deere dealer.

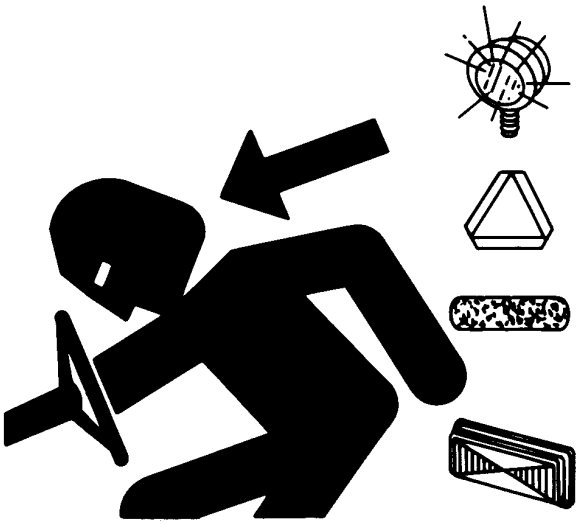

TS951 —UN—12APR90

DX,FLASH -19-07JUL99-1/1

Use a Safety Chain

A safety chain will help control drawn equipment should it accidentally separate from the drawbar.

Using the appropriate adapter parts, attach the chain to the tractor drawbar support or other specified anchor location. Provide only enough slack in the chain to permit turning.

See your John Deere dealer for a chain with a strength rating equal to or greater than the gross weight of the towed machine. Do not use safety chain for towing.

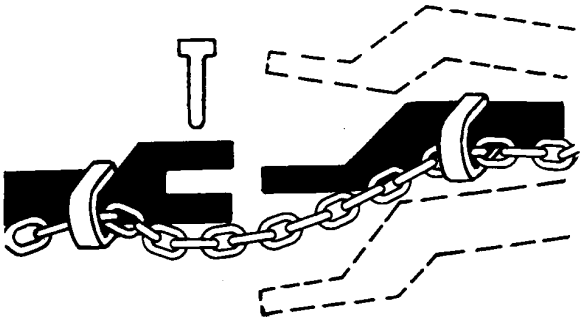

TS217 —UN—23AUG88

DX,CHAIN -19-03MAR93-1/1

Driving Tractor on Roads

CAUTION: Observe the following precautions when operating on a road.

1. Before operating tractor on highway be sure flashing warning lights (A) work properly. Install and use Slow Moving Vehicle (SMV) emblems (B), reflectors, and auxiliary lighting to equipment as required for safety and by local regulations. Clean the SMV emblem for the best visibility.

A—Warning Lights

B—Slow Moving Vehicle Emblem

PY39756 —UN—09FEB17

OOS

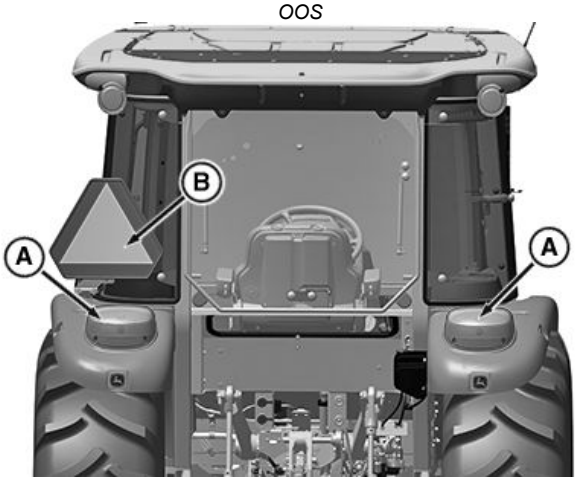

PY39757 —UN—09FEB17

Cab

Continued on next page

HS35416,0000160 -19-09FEB17-1/5

IMPORTANT: Refer to Lights section for detailed descriptions of lighting operations and functions.

2. Turn light switch (B) to warning, full beam headlights or low beam headlights position. Never use bright lights which are visible from the rear. Always dim headlights before meeting another vehicle. Keep headlights properly adjusted.
3. Use turn signals when turning. Be sure to return control lever (A) to center position after turning.
4. Couple brake pedals (C) together before driving on a road. Avoid hard applications of brakes.

A—Turn Signal Control Lever
B—Light Switch
C—Brake Pedals

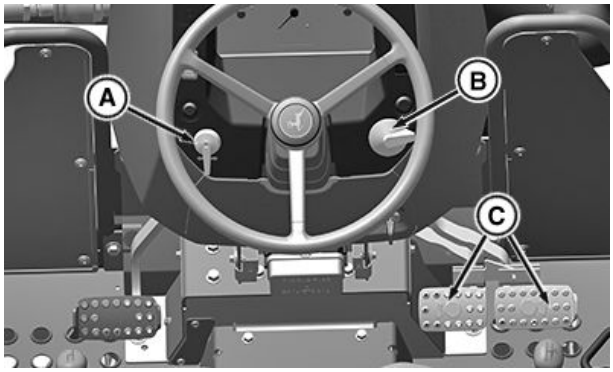

PY39758 —UN—09FEB17

OOS With TSS Transmission

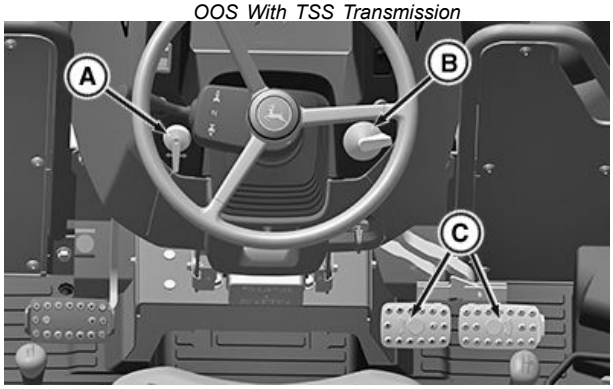

PY39759 —UN—09FEB17

OOS With PR Transmission

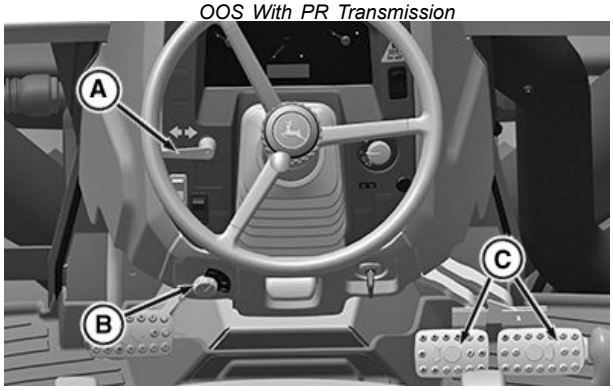

PY39761 —UN—09FEB17

Cab With TSS Transmission

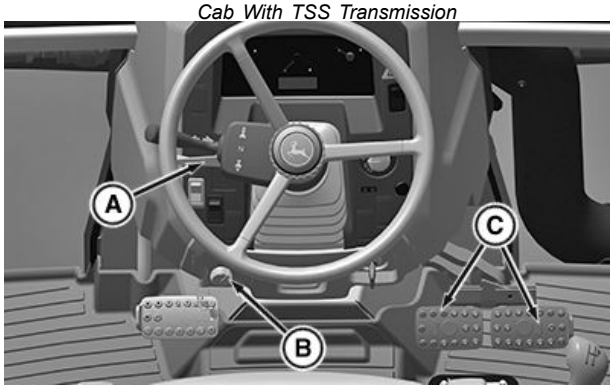

PY39760 —UN—09FEB17

Cab With PR Transmission

Continued on next page

HS35416,0000160 -19-09FEB17-2/5

5. Disengage mechanical front wheel drive lever (A) (if Equipped) when transporting on hard surface with the MFWD engaged.
6. Drive slowly enough to maintain safety control at all times. Slow down for hillsides, rough ground, and sharp turns, especially when transporting heavy, rear-mounted equipment.
7. Before going down a hill, shift to a gear low enough to control speed without using brakes. Never coast down hill.
8. When transporting downhill on icy or graveled grades, be alert for skids which could result in loss of steering control. To decrease chance of skids, reduce speed and be sure tractor has proper ballast.

A—MFWD Lever

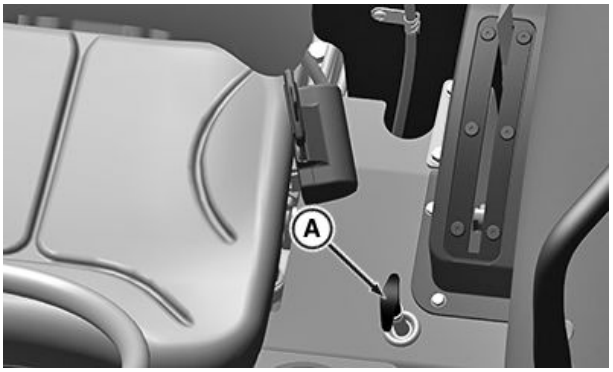

PY39763 —UN—09FEB17

OOS

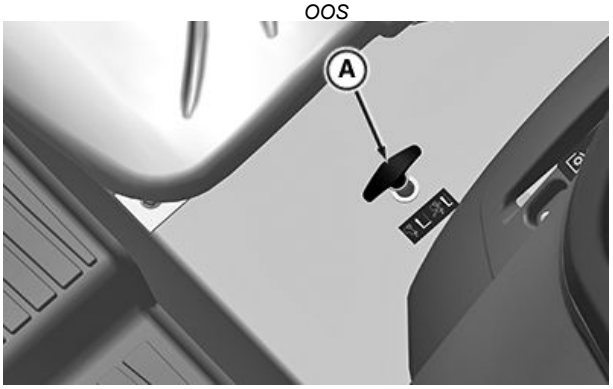

PY39762 —UN—09FEB17

Cab

HS35416,0000160 -19-09FEB17-3/5

CAUTION: A safety chain will help drawn equipment should it accidentally separate from the drawbar. Using the appropriate adapter parts, attach the chain to the tractor drawbar support or other specified anchor location. Provide only enough slack in the chain to permit turning. See your John Deere dealer for a chain with a strength rating equal to or greater than the gross weight of the towed machine. DO NOT use safety chain for towing.

IMPORTANT: Safety chain is provided for transport only. It must not be used for pulling or towing implements, or other items, not attached to drawbar, or damage to your tractor may result.

NOTE: Attach trailer brakes (if equipped) and check for proper operation.

9. Transporting Towed Loads:

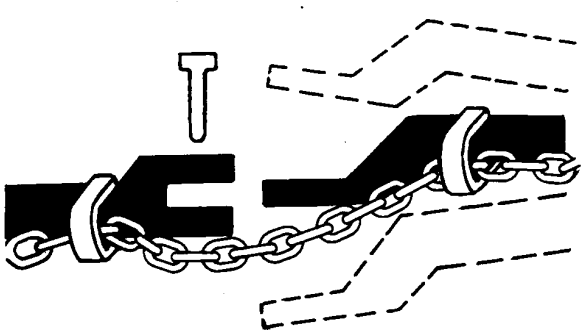

TS217 —UN—23AUG88

Lock drawbar pin in place, and use safety chain to help control drawn equipment should it accidentally separate from drawbar while transporting.

Continued on next page

HS35416,0000160 -19-09FEB17-4/5

CAUTION: Stopping distance increases with speed and weight of towed loads, and on slopes. Towed loads with or without brakes that are too heavy for the tractor or are towed too fast can cause loss of control. Consider the total weight of the equipment and its load.

Observe these recommended maximum road speeds, or local speed limits which may be lower:

If towed equipment does not have brakes, do not travel more than 32 km/h (20 mph) and do not tow loads more than 1.5 times the tractor weight.

If towed equipment has brakes, do not travel more than 40 km/h (25 mph) and do not tow loads more than 4.5 times the tractor weight.

Ensure the load does not exceed the recommended weight ratio. Add ballast to recommended maximum for tractor, lighten the load, or get a heavier towing unit. The tractor must be heavy and powerful enough with adequate braking power for the towed load. Use additional caution when towing loads under adverse surface conditions, when turning, and on inclines.

10. Use caution when operating tractor at transport speeds. Reduce speed if towed load weighs more than tractor and is not equipped with brakes. (See Towed Equipment operator's manual for recommended transport speeds.)

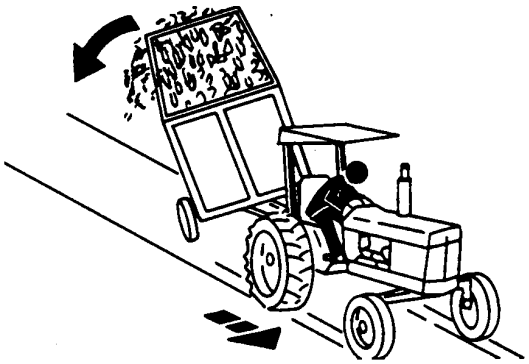

TS216 —UN—23AUG88

11. Use additional caution when transporting towed loads under adverse surface conditions, when turning and on inclines.
12. Heavy towed or rear mounted implements may start swaying in transport. Excessive swaying will result in loss of steering control. Drive slowly and avoid quick turns of steering wheel. Refer to your implement operator's manual regarding maximum travel speed limitations.

HS35416,0000160 -19-09FEB17-5/5

Transport on Carrier

CAUTION: Chain tractor to carrier securely. Drive carrier slowly.

The best method of transporting a disabled tractor is to haul it on a flatbed carrier.

IMPORTANT: Seal exhaust to prevent dirt from entering and damaging engine and/or turbocharger.

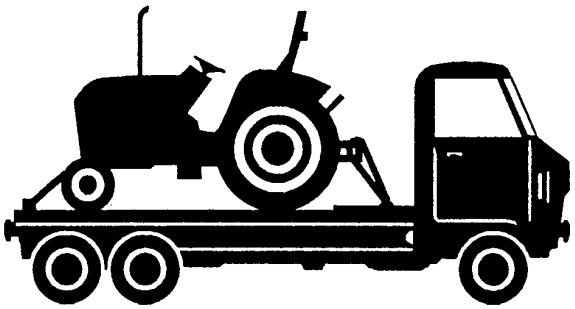

LV610 —UN—22APR94

MX,TRIP,FA2 -19-24JUL95-1/1

Towing Tractor

CAUTION: Remove MFWD drive shaft if towing tractor with front wheels on a carrier. Loss of transmission-hydraulic system pressure will engage the MFWD and pull tractor off the carrier, even with lever in the DISENGAGED position.

IMPORTANT: To avoid transmission and drive train component damage, NEVER attempt to start tractor by towing; engine will not start.

1. When towing tractor with front wheels on a carrier, remove drive shaft:
   a. Remove three cap screws and slide drive shaft shield (C) away from drop housing. Repeat on opposite end.
   b. Remove spring pin (A) using a punch and hammer.
   c. Support drive shaft and slide coupler (B) toward drop housing.
   d. Remove drive shaft, shields and couplers.
2. **Sight glass (If Equipped):** Check transmission-hydraulic oil level (it must be visible in the top sight glass (D)). Add 1 L (1 qt) for each 90 mm (3-1/2 in.) front wheels are raised off the ground. DO NOT raise front wheels more than 305 mm (12 in.). Drain excess oil after transporting.
3. **Dipstick (If Equipped):** Be sure transmission-hydraulic system oil is to the full mark on the dipstick (E). If the tractor is to be towed with the front wheels raised, add 1 liter of oil for each 90 mm (3-1/2 in.) the wheels are raised. DO NOT raise front wheels more than 305 mm (12 in.) above ground. Drain excess oil after transporting.
4. Tap brake pedals to make sure differential lock is not engaged.
5. Disengage PTO and move range and gear shift levers to NEUTRAL.
6. For PowrReverser™ Transmission, put EH directional reverser lever in NEUTRAL.
7. If possible, operate engine above 1250 rpm to provide lubrication, power steering, and power brakes. Have an operator steer and brake tractor.
8. Do not tow a tractor faster than 8 km/h (5 mph). Do not exceed 3 km/h (2 mph) for the first 10 minutes in below freezing temperatures.

After Towing

Apply multipurpose grease to MFWD couplers and shaft splines, and install drive shaft assembly.

PowrReverser is a trademark of Deere & Company

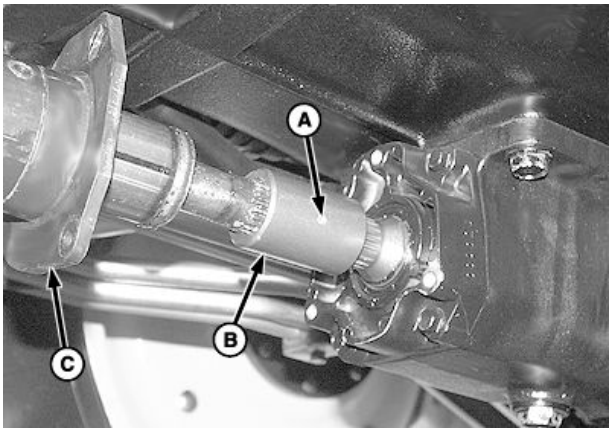

LV9702 —UN—24AUG04

MFWD Drive Shaft-to-Drop Housing

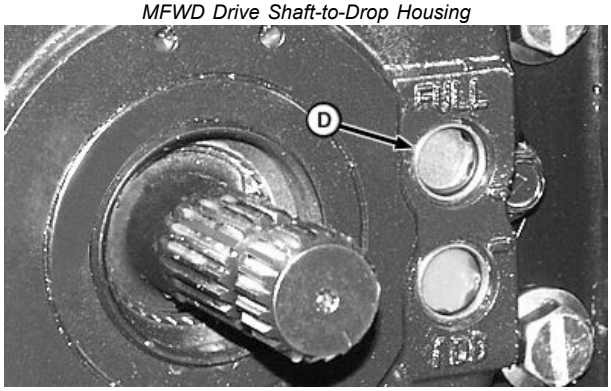

LV12796 —UN—20SEP06

Sight Glass

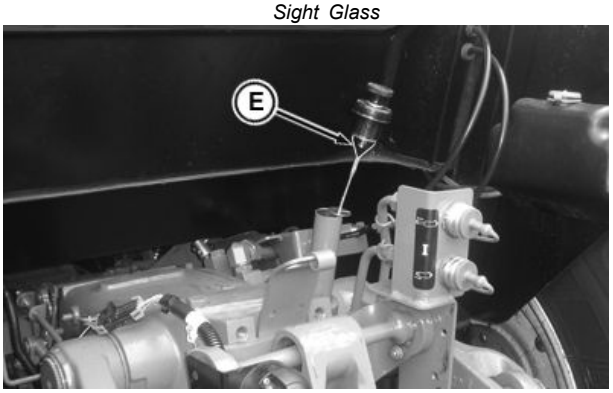

PY17688 —UN—24JAN13

A—Spring Pin
B—Coupler
C—Drive Shaft Shield
D—Sight Glass
E—Transmission/Hydraulic Oil Dipstick

Drain excess transmission-hydraulic oil to lower level back to full.

HS35416,000015F -19-09FEB17-1/1

Fuels, Lubricants, and Coolant

Handle Fuel Safely—Avoid Fires

Use only diesel fuel.

Handle fuel with care, it is highly flammable.

DO NOT refuel machine:
- While you smoke.
- When machine is near open flame or sparks.
- When engine is running. STOP engine.

Fill fuel tank outdoors.

Help prevent fires:
- Clean oil, grease and dirt from machine.
- Clean up spilled fuel immediately.

Do not store machine with fuel in tank in a building where fumes may reach an open flame or spark.

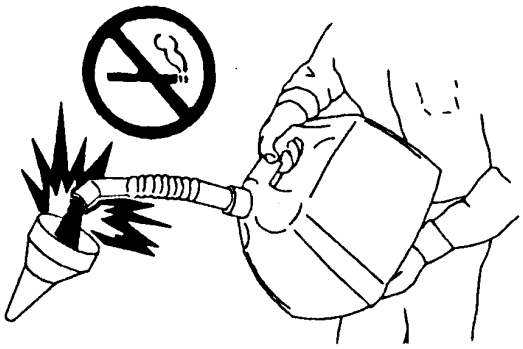

M73115 —UN—09MAR90

MX,FIRE,5A1 -19-22JUL94-1/1

Handle Fluids Safely—Avoid Fires

When you work around fuel, do not smoke or work near heaters or other fire hazards.

Store flammable fluids away from fire hazards. Do not incinerate or puncture pressurized containers.

Make sure machine is clean of trash, grease, and debris.

Do not store oily rags; they can ignite and burn spontaneously.

TS227 —UN—15APR13

DX,FLAME -19-29SEP98-1/1

Storing Fuel

If there is a very slow turnover of fuel in the fuel tank or supply tank, it may be necessary to add a fuel conditioner to prevent water condensation. Contact your John Deere dealer for proper service or maintenance recommendations.

DX,FUEL -19-03MAR93-1/1

Operating in Warm Temperature Climates

John Deere engines are designed to operate using recommended engine coolants.

Always use a recommended engine coolant, even when operating in geographical areas where freeze protection is not required.

IMPORTANT: Water may be used as coolant *in emergency situations only.*

Foaming, hot surface aluminum and iron corrosion, scaling, and cavitation occur when water is used as the coolant, even when coolant conditioners are added.

Drain cooling system and refill with recommended engine coolant as soon as possible.

DX,COOL6 -19-17FEB20-1/1

Handling and Storing Diesel Fuel

CAUTION: Reduce the risk of fire. Handle fuel carefully. DO NOT fill the fuel tank when engine is running. DO NOT smoke while you fill the fuel tank or service the fuel system.

Fill the fuel tank at the end of each day's operation to prevent water condensation and freezing during cold weather.

Keep all storage tanks as full as practical to minimize condensation.

Ensure that all fuel tank caps and covers are installed properly to prevent moisture from entering. Monitor water content of the fuel regularly.

When using biodiesel fuel, the fuel filter may require more frequent replacement due to premature plugging.

Check engine oil level daily prior to starting engine. A rising oil level may indicate fuel dilution of the engine oil.

IMPORTANT: The fuel tank is vented through the filler cap. If a new filler cap is required, always replace it with an original vented cap.

When fuel is stored for an extended period or if there is a slow turnover of fuel, add a fuel conditioner to stabilize the fuel. Keeping the free water drained and treating the bulk fuel storage tank quarterly with a maintenance dose of a biocide will prevent microbial growth. Contact your fuel supplier or John Deere dealer for recommendations.

DX,FUEL4 -19-13JAN18-1/1

Diesel Fuel

Consult your local fuel distributor for properties of the diesel fuel available in your area.

In general, diesel fuels are blended to satisfy the low temperature requirements of the geographical area in which they are marketed.

Diesel fuels specified to EN 590 or ASTM D975 are recommended. Renewable diesel fuel produced by hydrotreating animal fats and vegetable oils is basically identical to petroleum diesel fuel. Renewable diesel that meets EN 590, ASTM D975, or EN 15940 is acceptable for use at all percentage mixture levels.

Required Fuel Properties

In all cases, the fuel shall meet the following properties:

Cetane number of 40 minimum. Cetane number greater than 47 is preferred, especially for temperatures below –20 °C (–4 °F) or elevations above 1675 m (5500 ft.).

Cloud Point should be below the expected lowest ambient temperature or **Cold Filter Plugging Point** (CFPP) should be a maximum 10°C (18°F) below the fuel cloud point.

Fuel lubricity should pass a maximum scar diameter of 0.52 mm as measured by ASTM D6079 or ISO 12156-1. A maximum scar diameter of 0.45 mm is preferred.

Diesel fuel quality and sulfur content must comply with all existing emissions regulations for the area in which the engine operates. DO NOT use diesel fuel with sulfur content greater than 10 000 mg/kg (10 000 ppm).

Materials such as copper, lead, zinc, tin, brass and bronze should be avoided in fuel handling, distribution and storage equipment as these metals can catalyze fuel oxidation reactions which can lead to fuel system deposits and plugged fuel filters.

E-Diesel fuel

DO NOT use E-Diesel (Diesel fuel and ethanol blend). Use of E-Diesel fuel in any John Deere machine may void the machine warranty.

CAUTION: Avoid severe injury or death due to the fire and explosion risk from using E-Diesel fuel.

[1]*See DX,ENOIL12,OEM, DX,ENOIL12,T2,STD, or DX,ENOIL12,T2,EXT for more information on Engine Oil and Filter Service Intervals.*

Sulfur Content for Interim Tier 4, Final Tier 4, Stage III A and B, Stage IV, and Stage V Engines Above 560 kW

- Use ONLY diesel fuel with a maximum of 500 mg/kg (500 ppm) sulfur content.

Sulfur Content for Interim Tier 4, Final Tier 4, Stage III B, Stage IV Engines, and Stage V Engines

- Use ONLY ultra low sulfur diesel (ULSD) fuel with a maximum of 15 mg/kg (15 ppm) sulfur content.

Sulfur Content for Tier 3 and Stage III A Engines

- Use of diesel fuel with sulfur content less than 1000 mg/kg (1000 ppm) is RECOMMENDED.
- Use of diesel fuel with sulfur content 1000—2000 mg/kg (1000—2000 ppm) REDUCES the oil and filter change interval.
- BEFORE using diesel fuel with sulfur content greater than 2000 mg/kg (2000 ppm), contact your John Deere dealer.

Sulfur Content for Tier 2 and Stage II Engines

- Use of diesel fuel with sulfur content less than 2000 mg/kg (2000 ppm) is RECOMMENDED.
- Use of diesel fuel with sulfur content 2000—5000 mg/kg (2000—5000 ppm) REDUCES the oil and filter change interval.[1]
- BEFORE using diesel fuel with sulfur content greater than 5000 mg/kg (5000 ppm), contact your John Deere dealer.

Sulfur Content for Other Engines

- Use of diesel fuel with sulfur content less than 5000 mg/kg (5000 ppm) is RECOMMENDED.
- Use of diesel fuel with sulfur content greater than 5000 mg/kg (5000 ppm) REDUCES the oil and filter change interval.

IMPORTANT: Do not mix used diesel engine oil or any other type of lubricating oil with diesel fuel.

Improper fuel additive usage may cause damage on fuel injection equipment of diesel engines.

DX,FUEL1 -19-13JUL20-1/1

Minimizing the Effect of Cold Weather on Diesel Engines

John Deere diesel engines are designed to operate effectively in cold weather.

However, for effective starting and cold-weather operation, a little extra care is necessary. The following information outlines steps that can minimize the effect that cold weather may have on starting and operation of your engine. See your John Deere dealer for additional information and local availability of cold-weather aids.

Use Winter Grade Fuel

When temperatures fall below 0°C (32°F), winter grade fuel (No. 1-D in North America) is best suited for cold-weather operation. Winter grade fuel has a lower cloud point and a lower pour point.

Cloud point is the temperature at which wax begins to form in the fuel. This wax causes fuel filters to plug. **Pour point** is the lowest temperature at which movement of the fuel is observed.

NOTE: On average, winter grade diesel fuel has a lower Btu (heat content) rating. Using winter grade fuel may reduce power and fuel efficiency, but should not cause any other engine performance effects. Check the grade of fuel being used before troubleshooting for low-power complaints in cold-weather operation.

Air Intake Heater

An air intake heater is an available option for some engines to aid cold weather starting.

Ether

An ether port on the intake is available to aid cold weather starting.

CAUTION: Ether is highly flammable. Do not use ether when starting an engine equipped with glow plugs or an air intake heater.

Coolant Heater

An engine block heater (coolant heater) is an available option to aid cold weather starting.

Seasonal Viscosity Oil and Proper Coolant Concentration

Use seasonal grade viscosity engine oil based on the expected air temperature range between oil changes and a proper concentration of low silicate antifreeze as recommended. (See DIESEL ENGINE OIL and ENGINE COOLANT requirements in this section.)

Diesel Fuel Cold Flow Additive

Use John Deere Fuel-Protect Diesel Fuel Conditioner (winter formula), which contains anti-gel chemistry, or equivalent fuel conditioner to treat non-winter grade fuel (No. 2-D in North America) during the cold-weather season. This generally extends operability to about 10°C (18°F) below the fuel cloud point. For operability at even lower temperatures, use winter grade fuel.

IMPORTANT: Treat fuel when outside temperature drops below 0°C (32°F). For best results, use with untreated fuel. Follow all recommended instructions on label.

Biodiesel

When operating with biodiesel blends, wax formation can occur at warmer temperatures. Begin using John Deere Fuel-Protect Diesel Fuel Conditioner (winter formula) or equivalent at 5°C (41°F) to treat biodiesel fuels during the cold-weather season. Use B5 or lower blends at temperatures below 0°C (32°F). Use only winter grade petroleum diesel fuel at temperatures below -10°C (14°F).

Winterfronts

Use of fabric, cardboard, or solid winterfronts is not recommended with any John Deere engine. Their use can result in excessive engine coolant, oil, and charge air temperatures. This can lead to reduced engine life, loss of power and poor fuel economy. Winterfronts may also put abnormal stress on fan and fan drive components potentially causing premature failures.

If winterfronts are used, they should never totally close off the grill frontal area. Approximately 25% area in the center of the grill should remain open at all times. At no time should the air blockage device be applied directly to the radiator core.

Radiator Shutters

If equipped with a thermostatically controlled radiator shutter system, this system should be regulated in such a way that the shutters are completely open by the time the coolant reaches 93°C (200°F) to prevent excessive intake manifold temperatures. Manually controlled systems are not recommended.

If air-to-air aftercooling is used, the shutters must be completely open by the time the intake manifold air temperature reaches the maximum allowable temperature out of the charge air cooler.

For more information, see your John Deere dealer.

DX,FUEL10 -19-13JAN18-1/1

Biodiesel Fuel

Biodiesel fuel is comprised of monoalkyl esters of long chain fatty acids derived from vegetable oils or animal fats. Biodiesel blends are biodiesel mixed with petroleum diesel fuel on a volume basis.

Before using fuel containing biodiesel, review the Biodiesel Use Requirements and Recommendations in this Operator's Manual.

Environmental laws and regulations can encourage or prohibit the use of biofuels. Operators should consult with appropriate governmental authorities prior to using biofuels.

John Deere Stage V Engines Operating in the European Union

Where the engine is to be operated within the Union on diesel or non-road gas-oil, a fuel with a FAME content not greater than 8% volume/volume (B8) shall be used.

John Deere Engines with Exhaust Filter Except Stage V Engines Operating in the European Union

Biodiesel blends up to B20 can be used ONLY if the biodiesel (100% biodiesel or B100) meets ASTM D6751, EN 14214, or equivalent specification. Expect a 2% reduction in power and a 3% reduction in fuel economy when using B20.

Biodiesel concentrations above B20 can harm the engine's emission control systems and should not be used. Risks include, but are not limited to, more frequent stationary regeneration, soot accumulation, and increased intervals for ash removal.

John Deere Fuel conditioners or equivalent, which contain detergent and dispersant additives, are required when using biodiesel blends from B10 to B20, and are recommended when using lower biodiesel blends.

John Deere Engines Without Exhaust Filter

Biodiesel blends up to B20 can be used ONLY if the biodiesel (100% biodiesel or B100) meets ASTM D6751, EN 14214, or equivalent specification. Expect a 2% reduction in power and a 3% reduction in fuel economy when using B20.

These John Deere engines can operate on biodiesel blends above B20 (up to 100% biodiesel). Operate at levels above B20 ONLY if the biodiesel is permitted by law and meets the EN 14214 specification (primarily available in Europe). Engines operating on biodiesel blends above B20 might not fully comply with or be permitted by all applicable emissions regulations. Expect up to a 12% reduction in power and an 18% reduction in fuel economy when using 100% biodiesel.

John Deere fuel conditioners or equivalent, which contain detergent and dispersant additives, are required when using biodiesel blends from B10 to B100, and are recommended when using lower biodiesel blends.

Biodiesel Use Requirements and Recommendations

The petroleum diesel portion of all biodiesel blends must meet the requirements of ASTM D975 (US) or EN 590 (EU) commercial standard.

Biodiesel users in the U.S. are strongly encouraged to purchase biodiesel blends from a BQ-9000 Certified Marketer and sourced from a BQ-9000 Accredited Producer (as certified by the National biodiesel Board). Certified Marketers and Accredited Producers can be found at the following website: http://www.bq9000.org.

Biodiesel contains residual ash. Ash levels exceeding the maximums allowed in either ASTM D6751 or EN14214 can result in more rapid ash loading and require more frequent cleaning of the Exhaust Filter (if present).

The fuel filter can require more frequent replacement when using biodiesel fuel, particularly if switching from diesel. Check engine oil level daily prior to starting engine. A rising oil level can indicate fuel dilution of the engine oil. Biodiesel blends up to B20 must be used within 90 days of the date of biodiesel manufacture. Biodiesel blends above B20 must be used within 45 days from the date of biodiesel manufacture.

When using biodiesel blends up to B20, the following must be considered:

- Cold-weather flow degradation
- Stability and storage issues (moisture absorption, microbial growth)
- Possible filter restriction and plugging (usually a problem when first switching to biodiesel on used engines)
- Possible fuel leakage through seals and hoses (primarily an issue with older engines)
- Possible reduction of service life of engine components

Request a certificate of analysis from your fuel distributor to ensure that the fuel is compliant with the specifications provided in this Operator's Manual.

Consult your John Deere dealer for John Deere fuel products to improve storage and performance with biodiesel fuels.

The following must also be considered if using biodiesel blends above B20:

- Possible coking or blocked injector nozzles, resulting in power loss and engine misfire if John Deere fuel additives and conditioners or equivalent containing detergent/dispersants are not used
- Possible crankcase oil dilution (requiring more frequent oil changes)
- Possible lacquering or seizure of internal components
- Possible formation of sludge and sediments
- Possible thermal oxidation of fuel at elevated temperatures

Continued on next page

DX,FUEL7 -19-13JAN18-1/2

- Possible compatibility issues with other materials (including copper, lead, zinc, tin, brass, and bronze) used in fuel handling, distribution, and storage equipment
- Possible reduction in water separator efficiency
- Possible damage to paint if exposed to biodiesel
- Possible corrosion of fuel injection equipment
- Possible elastomeric seal and gasket material degradation (primarily an issue with older engines)
- Possible high acid levels within fuel system
- Because biodiesel blends above B20 contain more ash, using blends above B20 can result in more rapid ash loading and require more frequent cleaning of the Exhaust Filter (if present)

IMPORTANT: Raw pressed vegetable oils are NOT acceptable for use as fuel in any concentration in John Deere engines. Their use could cause engine failure.

DX,FUEL7 -19-13JAN18-2/2

Fill Fuel Tank

TS202 —UN—23AUG88

A—Fuel Tank Cap

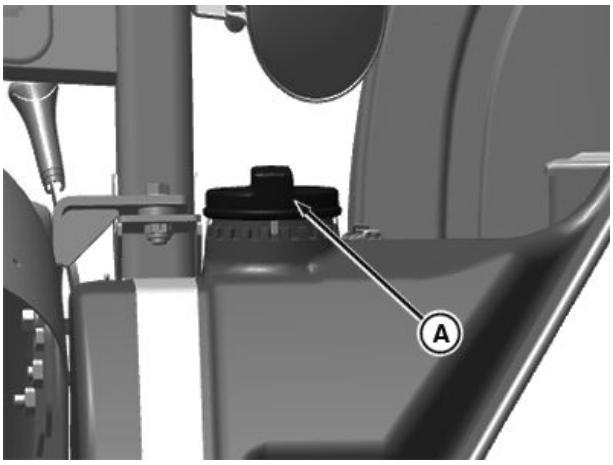

PY37359 —UN—20FEB17

OOS

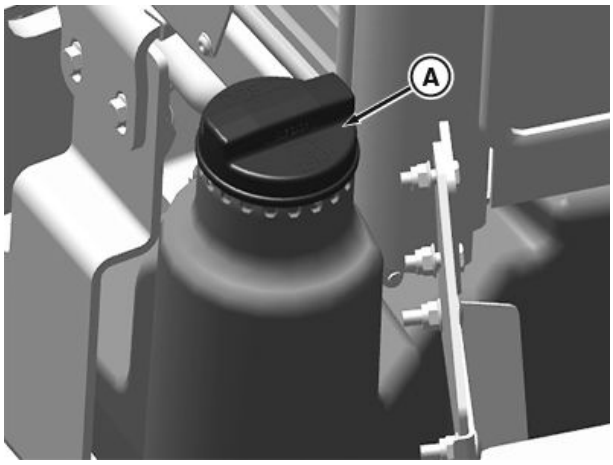

PY37360 —UN—20FEB17

Cab

CAUTION: Handle fuel with care: It is highly flammable. DO NOT refuel the machine while smoking or when near open flame or sparks.

Always stop engine before refueling machine. Fill fuel tank outdoors.

Prevent fires by keeping machine clean of accumulated trash, grease and debris. Always clean up spilled fuel.

Fill fuel tank at end of each days operation. This prevents condensation in tank as moist air cools.

Specification

OOS Fuel Tank—Capacity.....68 ± 3 L (18 ± 0.79 gal) Approximate

Cab Fuel Tank—Capacity.....82 ± 4 L (21.6 ± 1.06 gal) Approximate

IMPORTANT: The fuel tank uses a sealed filler cap. If a new filler cap is required, always replace it with a sealed cap.

NOTE: To reduce fuel gelling and control wax separation during cold weather, John Deere Fuel Flow Improver, or equivalent, may be added to fuel or bulk storage tank.

MM12389,000003F -19-20FEB17-1/1

Alternative and Synthetic Lubricants

Conditions in certain geographical areas may require lubricant recommendations different from those printed in this manual.

Some John Deere brand coolants and lubricants may not be available in your location.

Consult your John Deere dealer to obtain information and recommendations.

Synthetic lubricants may be used if they meet the performance requirements as shown in this manual.

The temperature limits and service intervals shown in this manual apply to John Deere branded fluids or fluids that have been tested and/or approved for use in John Deere equipment.

Re-refined base stock products may be used if the finished lubricant meets the performance requirements.

DX,ALTER -19-13JAN18-1/1

Lubricant Storage

Your equipment can operate at top efficiency only when clean lubricants are used.

Use clean containers to handle all lubricants.

Store lubricants and containers in an area protected from dust, moisture, and other contamination. Store containers on their side to avoid water and dirt accumulation.

Make certain that all containers are properly marked to identify their contents.

Properly dispose of all old containers and any residual lubricant they may contain.

DX,LUBST -19-11APR11-1/1

Diesel Exhaust Fluid (DEF) — Use in Selective Catalytic Reduction (SCR) Equipped Engines

In order to maintain the emissions performance of the engine, it is essential to use and refill DEF in accordance with the specification.

Diesel exhaust fluid (DEF) is a high purity liquid that is injected into the exhaust system of engines equipped with selective catalytic reduction (SCR) systems. Maintaining the purity of DEF is important to avoid malfunctions in the SCR system. Engines requiring DEF shall use a product that meets the requirements for aqueous urea solution 32 (AUS 32) according to ISO 22241-1.

The use of John Deere Diesel Exhaust Fluid is recommended. John Deere Diesel Exhaust Fluid is available at your John Deere dealer in a variety of package sizes to suit your operational needs.

If John Deere Diesel Exhaust Fluid is not available, use DEF that is certified by the American Petroleum Institute (API) Diesel Exhaust Fluid Certification Program or by the AdBlue™ Diesel Exhaust Fluid Certification Program. Look for the API certification symbol or the AdBlue™ name on the container.

AdBlue is a trademark of VDA, the German Association of the Automotive Industry.

RG30211 —UN—08MAR18

In some cases, DEF is referred to by one or more of these names:

- Urea
- Aqueous Urea Solution 32
- AUS 32
- AdBlue™
- NOx Reduction Agent
- Catalyst Solution

DX,DEF -19-13JAN18-1/1

Disposal of Diesel Exhaust Fluid (DEF)

Although there is little issue with minor spillage of DEF on the ground, large amounts of DEF should be contained. If large spills occur, contact local environmental authorities for assistance with clean-up.

If a substantial quantity of DEF is not within specification, contact the DEF supplier for assistance with disposal. Do not dump substantial quantities of DEF onto the ground or send DEF to wastewater treatment facilities.

DX,DEF,DISPOSE -19-13JUN13-1/1

Refilling Diesel Exhaust Fluid (DEF) Tank

CAUTION: Avoid contact with eyes. In case of contact, immediately flush eyes with large amounts of water for a minimum of 15 minutes. Reference the Materials Safety Data Sheet (MSDS) for additional information.

Do not ingest DEF. In the event DEF is ingested, contact a physician immediately. Reference the Materials Safety Data Sheet (MSDS) for additional information.

IMPORTANT: Use only distilled water to rinse components that are used to deliver DEF. Tap water can contaminate DEF. If distilled water is not available, rinse with clean tap water, then thoroughly rinse with ample amounts of DEF.

If DEF is spilled or contacts any surface other than the storage tank, immediately clean the surface with clear water. DEF is corrosive to painted and unpainted metallic surfaces and can distort some plastic and rubber components.

If DEF is filled into engine fuel tank or other fluid compartment, do not operate engine until system is properly purged of DEF. Contact your John Deere dealer immediately to determine how to clean and purge the system.

Reasonable care should be taken when refilling the DEF tank. Ensure that the DEF tank cap area is free of debris before removing the cap. Seal containers of DEF between use to prevent contamination and evaporation.

Avoid splashing DEF and do not allow DEF to come into contact with skin, eyes, or mouth.

DEF is not harmful to handle, but DEF can be corrosive to materials such as steel, iron, zinc, nickel, copper, aluminum, and magnesium. Use suitable containers to transport and store DEF. Containers made of polyethylene, polypropylene, or stainless steel are recommended.

TS1731 —UN—23AUG13

Avoid prolonged contact with skin. In case of accidental contact, wash skin immediately with soap and water.

Keep anything used to store or dispense DEF clean of dirt and dust. Wash and rinse containers or funnels thoroughly with distilled water to remove contaminants.

If an unapproved fluid, such as diesel fuel or coolant is added to the DEF tank, contact your John Deere dealer immediately to determine how to clean and purge the system.

If water has been added to the DEF tank, a tank cleaning is necessary. See Cleaning DEF Tank in this manual. After refilling the tank, check the DEF concentration. See Testing Diesel Exhaust Fluid (DEF).

The operator must maintain appropriate DEF levels at all times. Check the DEF level daily and refill the tank as needed. The filling port is identified by a blue colored cap embossed with the following DEF symbol.

DX,DEF,REFILL -19-15JUL20-1/1

Storing Diesel Exhaust Fluid (DEF)

CAUTION: Avoid contact with eyes. In case of contact, immediately flush eyes with large amounts of water for a minimum of 15 minutes. Reference the Materials Safety Data Sheet (MSDS) for additional information.

Do not ingest DEF. In the event DEF is ingested, contact a physician immediately. Reference the Materials Safety Data Sheet (MSDS) for additional information.

IMPORTANT: It is unlawful to tamper with or remove any component of the aftertreatment system. Do not use DEF that does not meet the required specifications or operate the engine with no DEF.

Never attempt to create DEF by mixing agricultural grade urea with water. Agricultural grade urea does not meet the necessary specifications and can damage the aftertreatment system.

Do not add any chemicals or additives to DEF in an effort to prevent freezing. Any chemicals or additives added to DEF can damage the aftertreatment system.

Never add water or any other fluid in place of, or in addition to DEF. Operating with a modified DEF or using an unapproved DEF can damage the aftertreatment system.

Storage information provided below is for reference and is to be used as a guideline only.

It is preferred to store DEF out of extreme ambient temperatures. DEF freezes at –11°C (12°F). Exposure to temperatures greater than 30°C (86°F) can degrade DEF over time. Do not store DEF in direct sunlight.

Dedicated DEF storage containers must be sealed between uses to prevent evaporation and contamination. Containers made of polyethylene, polypropylene, or stainless steel are recommended to transport and store DEF.

Ideal conditions for storage of DEF are:
- Store at temperatures between –5°C and 30°C (23°F and 86°F)
- Store in dedicated containers sealed to avoid contamination and evaporation

Under these conditions, DEF is expected to remain useable for a minimum of 18 months. Storing DEF at higher temperatures can reduce its useful life by approximately 6 months for every 5°C (9°F) temperature above 30°C (86°F).

If unsure how long or under what conditions DEF has been stored, test DEF. See Testing Diesel Exhaust Fluid (DEF).

Long-term storage in the DEF tank (over 12 months) is not recommended. If long-term storage is necessary, test DEF prior to operating engine. See Testing Diesel Exhaust Fluid (DEF).

It is recommended to purchase DEF in quantities that will be consumed within 12 months.

DX,DEF,STORE -19-15JUL20-1/1

Testing Diesel Exhaust Fluid (DEF)

IMPORTANT: Using DEF with the correct concentration is critical to engine and aftertreatment system performance. Extended storage and other conditions can adversely alter the DEF concentration.

If DEF quality is questionable, draw a sample out of the DEF tank or storage tank into a clear container. DEF must be crystal clear with a light ammonia smell. If DEF appears cloudy, has a colored tint, or has a profound ammonia smell, it is likely not within specification. DEF in this condition should not be used. Drain tank, flush with distilled water and refill with new or good DEF. After refilling the tank, check the DEF concentration.

If the DEF passes the visual and smell test, check the DEF concentration with a handheld refractometer calibrated to measure DEF.

DEF concentration should be checked when the engine has been stored for extended periods, or if there is suspicion the engine or packaged DEF fluid has been contaminated with water.

Two approved tools are available through your John Deere dealer:
- JDG11594 Digital DEF Refractometer—A digital tool providing an easy to read concentration measurement
- JDG11684 DEF Refractometer—Low-cost alternative tool providing an analog reading

Follow instructions included with either tool to obtain the measurement.

The correct DEF concentration is 31.8—33.2% urea. If the DEF concentration is not within specification, drain the DEF tank, flush with distilled water and fill with new or good DEF. If packaged DEF is not within specification, dispose of DEF packages and replace with new or good DEF.

DX,DEF,TEST -19-13JUN13-1/1

Diesel Engine Oil — Interim Tier 4, Final Tier 4, Stage IIIB, Stage IV, and Stage V

Failure to follow applicable oil standards and drain intervals can result in severe engine damage that might not be covered under warranty. Warranties, including the emissions warranty, are not conditioned on the use of John Deere oils, parts, or service.

Use oil viscosity based on the expected air temperature range during the period between oil changes.

John Deere Plus-50™ II is the recommended engine oil.

Extended service intervals may apply when John Deere Plus-50™ II engine oil is used. Refer to the engine oil drain interval table and consult your John Deere dealer for more information.

If John Deere Plus-50™ II engine oil is not available, engine oil meeting one or more of the following may be used:

- API Service Category CK-4
- API Service Category CJ-4
- ACEA Oil Sequence E9
- ACEA Oil Sequence E6

DO NOT use engine oil containing more than 1.0% sulfated ash, 0.12% phosphorus, or 0.4% sulfur.

Multi-viscosity diesel engine oils are preferred.

Diesel fuel quality and fuel sulfur content must comply with all existing emissions regulations for the area in which the engine operates.

Plus-50 is a trademark of Deere & Company

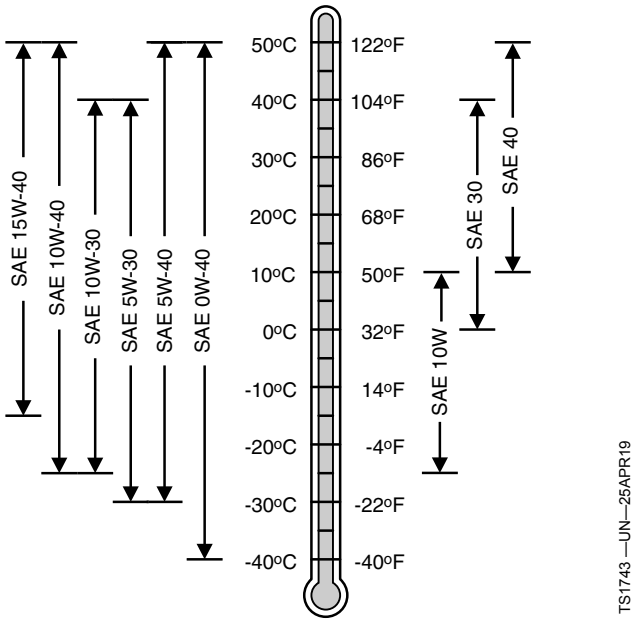

Oil Viscosities for Air Temperature Ranges

IMPORTANT: Use only ultra low sulfur diesel (ULSD) fuel with a maximum sulfur content of 15 mg/kg (15 ppm).

DX,ENOIL14 -19-23APR19-1/1

Engine Oil and Filter Service Intervals — Interim Tier 4, Final Tier 4, Stage IIIB, Stage IV, and Stage V Engines

Failure to follow applicable oil standards and drain intervals can result in severe engine damage that might not be covered under warranty. Warranties, including the emissions warranty, are not conditioned on the use of John Deere oils, parts, or service.

Recommended oil and filter service intervals are based on a combination of oil pan capacity, type of engine oil and filter used, and sulfur content of the diesel fuel. Actual service intervals also depend on operation and maintenance practices.

Approved Oil Types:

- John Deere Plus-50™ II
- "Other Oils" include API CK-4, API CJ-4, ACEA E9, and ACEA E6

Use oil analysis to evaluate the condition of the oil and to aid in selection of the proper oil and filter service interval. Contact your John Deere dealer or other qualified service provider for more information on engine oil analysis.

Change the oil and oil filter at least once every 12 months even if the hours of operation are fewer than the otherwise recommended service interval.

Diesel fuel sulfur content affects engine oil and filter service intervals. Higher fuel sulfur levels reduce oil and filter service intervals.

Use of diesel fuel with sulfur content less than 15 mg/kg (15 ppm) is REQUIRED.

Plus-50 is a trademark of Deere & Company

Engine operation at high altitude decreases oil change intervals. See Diesel Engine Oil Service Interval for Operation at High Altitude for additional information.

NOTE: The 500 hour extended oil and filter change interval is only allowed if all of the following conditions are met:

- *Use of diesel fuel with sulfur content less than 15 mg/kg (15 ppm)*
- *Use of John Deere Plus-50™ II oil*
- *Use of an approved John Deere oil filter*

Engine Oil and Filter Service Intervals	
John Deere Plus-50™ II	500 hours
Other Oils	250 hours
Oil analysis may extend the service interval of "Other Oils" to a maximum not to exceed the interval of Plus-50™ II oils. Oil analysis means taking a series of oil samples at 50-hour increments beyond the normal service interval until either the data indicates the end of useful oil life or the maximum service interval of John Deere Plus-50 II oils is reached.	

IMPORTANT: To avoid engine damage:

- **Reduce oil and filter service intervals by 50% when using biodiesel blends greater than B20. Oil analysis may allow longer service intervals.**
- **Use only approved oil types.**

DX,ENOIL15,IT4,120toMAX -19-13JAN18-1/1

John Deere Break-In Plus™ Engine Oil — Interim Tier 4, Final Tier 4, Stage IIIB, Stage IV, and Stage V

New engines are filled at the factory with John Deere Break-In Plus™ Engine Oil. During the break-in period, add John Deere Break-In Plus™ Engine Oil, as needed to maintain the specified oil level.

Operate the engine under various conditions, particularly heavy loads with minimal idling, to help seat engine components properly.

During the initial operation of a new or rebuilt engine, change the oil and filter between a minimum of 100 hours and maximum equal to the interval specified for John Deere Plus-50™ II oil.

After engine overhaul, fill the engine with John Deere Break-In Plus™ Engine Oil.

If John Deere Break-In Plus™ Engine Oil is not available, use an SAE 10W-30 viscosity grade diesel engine oil meeting one of the following:

- API Service Category CK-4
- API Service Category CJ-4
- ACEA Oil Sequence E9
- ACEA Oil Sequence E6

If one of these oils is used during the initial operation of a new or rebuilt engine, change the oil and filter between a minimum of 100 hours and a maximum of 250 hours.

IMPORTANT: Do not use any other engine oils during the initial break-in of a new or rebuilt engine.

John Deere Break-In Plus™ Engine Oil can be used for all John Deere diesel engines at all emission certification levels.

After the break-in period, use John Deere Plus-50™ II or other diesel engine oil as recommended in this manual.

Break-In Plus is a trademark of Deere & Company
Plus-50 is a trademark of Deere & Company.

DX,ENOIL16 -19-13JAN18-1/1

Oil Filters

Filtration of oils is critically important for proper operation and lubrication. John Deere brand oil filters have been designed and produced specifically for John Deere applications.

John Deere filters adhere to engineering specifications for quality of the filter media, filter efficiency rating, strength of the bond between the filter media and the element end cap, fatigue life of the canister (if applicable), and pressure capability of the filter seal. Non-John Deere branded oil filters might not meet these key John Deere specifications.

Always change oil filters regularly as specified in this manual.

DX,FILT1 -19-11APR11-1/1

Diesel Engine Coolant (engine with wet sleeve cylinder liners)

Failure to follow applicable coolant standards and drain intervals can result in severe engine damage that may not be covered under warranty. Warranties, including the emissions warranty, are not conditioned on the use of John Deere coolants, parts, or service.

Preferred Coolants

The following pre-mix engine coolants are preferred:

- **John Deere COOL-GARD™II**
- **John Deere COOL-GARD II PG**

COOL-GARD II pre-mix coolant is available in several concentrations with different freeze protection limits as shown in the following table.

COOL-GARD II Pre-Mix	Freeze Protection Limit
COOL-GARD II 20/80	-9°C (16°F)
COOL-GARD II 30/70	-16°C (3°F)
COOL-GARD II 50/50	-37°C (-34°F)
COOL-GARD II 55/45	-45°C (-49°F)
COOL-GARD II PG 60/40	-49°C (-56°F)
COOL-GARD II 60/40	-52°C (-62°F)

Not all COOL-GARD II pre-mix products are available in all countries.

Use COOL-GARD II PG when a non-toxic coolant formulation is required.

Additional Recommended Coolants

The following engine coolant is also recommended:

- John Deere COOL-GARD II Concentrate in a 40—60% mixture of concentrate with quality water.

IMPORTANT: When mixing coolant concentrate with water, do not use less than 40% or greater than 60% concentration of coolant. Less than 40% gives inadequate additives for corrosion protection. Greater than 60% can result in coolant gelation and cooling system problems.

Other Coolants

Other ethylene glycol or propylene glycol base coolants may be used if they meet the following specification:

- Pre-mix coolant meeting ASTM D6210 requirements
- Is formulated with a 2-ethylhexanoic acid (2-EHA) free additive package
- Coolant concentrate meeting ASTM D6210 requirements in a 40—60% mixture of concentrate with quality water

If coolant meeting one of these specifications is unavailable, use a coolant concentrate or pre-mix coolant that has a minimum of the following chemical and physical properties:

- Provides cylinder liner cavitation protection according to either the John Deere Cavitation Test Method or a fleet study run at or above 60% load capacity
- Is formulated with a nitrite-free additive package
- Is formulated with a 2-ethylhexanoic acid (2-EHA) free additive package
- Protects the cooling system metals (cast iron, aluminum alloys, and copper alloys such as brass) from corrosion

Water Quality

Water quality is important to the performance of the cooling system. Deionized or demineralized water is recommended for mixing with ethylene glycol and propylene glycol base engine coolant concentrate.

Coolant Drain Intervals

Drain and flush the cooling system and refill with fresh coolant at the indicated interval, which varies with the coolant used.

When COOL-GARD II or COOL-GARD II PG is used, the drain interval is 6 years or 6000 hours of operation.

If a coolant other than COOL-GARD II or COOL-GARD II PG is used, reduce the drain interval to 2 years or 2000 hours of operation.[1]

IMPORTANT: Do not use cooling system sealing additives or antifreeze that contains sealing additives.

Do not mix ethylene glycol and propylene glycol base coolants.

Do not use coolants that contain nitrites.

COOL-GARD is a trademark of Deere & Company

[1]Coolant analysis may extend the service interval of other "Coolants" to a maximum not to exceed the interval of Cool-Gard II coolants. Coolant analysis means taking a series of coolant samples at 1000 hour increments beyond the normal service interval until either the data indicate the end of useful coolant life or the maximum service interval of Cool-Gard II is reached.

DX,COOL3 -19-25AUG20-1/1

John Deere COOL-GARD™ II Coolant Extender

Some coolant additives gradually deplete during engine operation. For COOL-GARD™ II pre-mix and COOL-GARD II Concentrate, replenish coolant additives between drain intervals by adding COOL-GARD II Coolant Extender.

COOL-GARD II Coolant Extender should not be added unless indicated by COOL-GARD II Test Strips. These test strips provide a simple, effective method to check the freeze point, additive levels, and pH of your engine coolant.

Test the coolant solution at intervals of 12 months and whenever excessive coolant is lost through leaks or overheating.

IMPORTANT: Do not use COOL-GARD II Test Strips with COOL-GARD II PG.

COOL-GARD II Coolant Extender is a chemically matched additive system for use with all COOL-GARD II coolants.

COOL-GARD is a trademark of Deere & Company

COOL-GARD II Coolant Extender is not intended for use with nitrite-containing coolants.

IMPORTANT: Do not add a supplemental coolant additive when the cooling system is drained and refilled with any of the following:

- **John Deere COOL-GARD II**
- **John Deere COOL-GARD II PG**

The use of non-recommended supplemental coolant additives can result in additive drop-out, gelation of the coolant, or corrosion of cooling system components.

Add the recommended concentration of COOL-GARD II Coolant Extender. DO NOT add more than the recommended amount.

DX,COOL16 -19-15MAY13-1/1

Water Quality for Mixing with Coolant Concentrate

Engine coolants are a combination of three chemical components: ethylene glycol (EG) or propylene glycol (PG) antifreeze, inhibiting coolant additives, and quality water.

Water quality is important to the performance of the cooling system. Deionized or demineralized water is recommended for mixing with ethylene glycol and propylene glycol base engine coolant concentrate.

All water used in the cooling system should meet the following minimum specifications for quality:

Chlorides	<40 mg/L
Sulfates	<100 mg/L
Total solids	<340 mg/L
Total dissolved I hardness	<170 mg/L
pH	5.5—9.0

IMPORTANT: Do not use bottled drinking water because it often contains higher concentrations of total dissolved solids.

Freeze Protection

The relative concentrations of glycol and water in the engine coolant determine its freeze protection limit.

Ethylene Glycol	Freeze Protection Limit
40%	-24°C (-12°F)
50%	-37°C (-34°F)
60%	-52°C (-62°F)
Propylene Glycol	**Freeze Protection Limit**
40%	-21°C (-6°F)
50%	-33°C (-27°F)
60%	-49°C (-56°F)

DO NOT use a coolant-water mixture greater than 60% ethylene glycol or 60% propylene glycol.

DX,COOL19 -19-13JAN18-1/1

Testing Coolant Freeze Point

The use of a handheld coolant refractometer is the quickest, easiest, and most accurate method to determine coolant freeze point. This method is more accurate than a test strip or a float-type hydrometer which can produce poor results.

A coolant refractometer is available through your John Deere dealer under the SERVICEGARD™ tool program. Part number 75240 provides an economical solution to accurate freeze point determination in the field.

To use this tool:

1. Allow cooling system to cool to ambient temperatures.
2. Open radiator cap to expose coolant.
3. With the included dropper, collect a small coolant sample.
4. Open the lid of the refractometer, place one drop of coolant on the window and close the lid.
5. Look through the eyepiece and focus as necessary.
6. Record the listed freeze point for the type of coolant (ethylene glycol coolant or propylene glycol) being tested.

TS1732 —UN—04SEP13

SERVICEGARD™ Part Number 75240

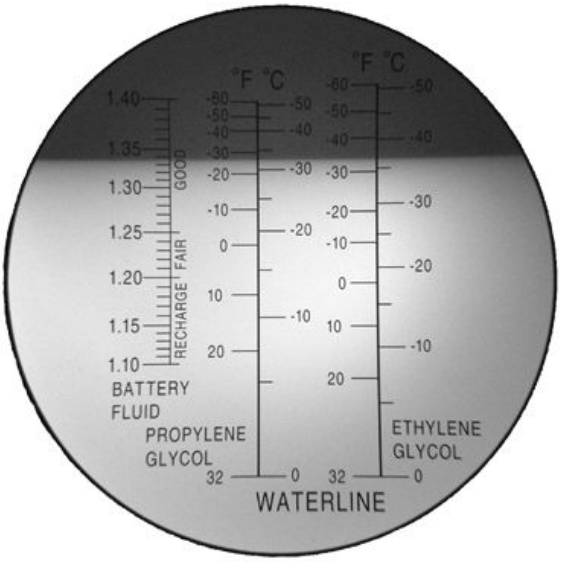

TS1733 —UN—04SEP13

Image with a Drop of 50/50 Coolant Placed on the Refractometer Window

SERVICEGARD is a trademark of Deere & Company

DX,COOL,TEST -19-13JUN13-1/1

Transmission and Hydraulic Oil

Use oil viscosity based on the expected air temperature range during the period between oil changes.

The following oils are preferred:

- John Deere Hy-Gard™
- John Deere Low Viscosity Hy-Gard™

Other oils may be used if they meet one of the following:

- John Deere Standard JDM J20C
- John Deere Standard JDM J20D

Use John Deere Bio Hy-Gard™ II oil when a biodegradable fluid is required.[1]

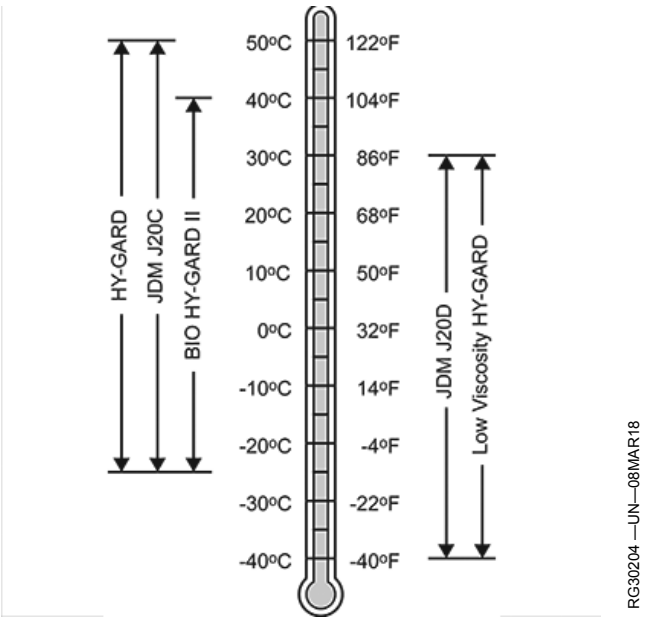

Oils for Air Temperature Ranges

Hy-Gard is a trademark of Deere & Company
Bio Hy-Gard is a trademark of Deere & Company

[1] Bio Hy-Gard II meets or exceeds the minimum biodegradability of 80% within 21 days according to CEC-L-33-T-82 test method. Bio Hy-Gard II should not be mixed with mineral oils, because this reduces the biodegradability and makes proper oil recycling impossible.

DX,ANTI -19-01JAN18-1/1

Use Correct Transmission-Hydraulic Filter Element

To protect system, replace transmission-hydraulic oil filter with a John Deere service filter element.

See service interval chart in Maintenance and Service Intervals section for recommended filter change intervals.

SD74272,000033D -19-17MAR20-1/1

Transmission, Steering, Brake, Hydraulic, and Gear Case Oil

Use oil viscosity based on the expected air temperature range during the period between oil changes.

The following oils are preferred:

- John Deere Hy-Gard™
- John Deere Low Viscosity Hy-Gard™

Other oils may be used if they meet one of the following:

- John Deere Standard JDM J20C
- John Deere Standard JDM J20D

Use John Deere Bio Hy-Gard™ II oil when a biodegradable fluid is required.[1]

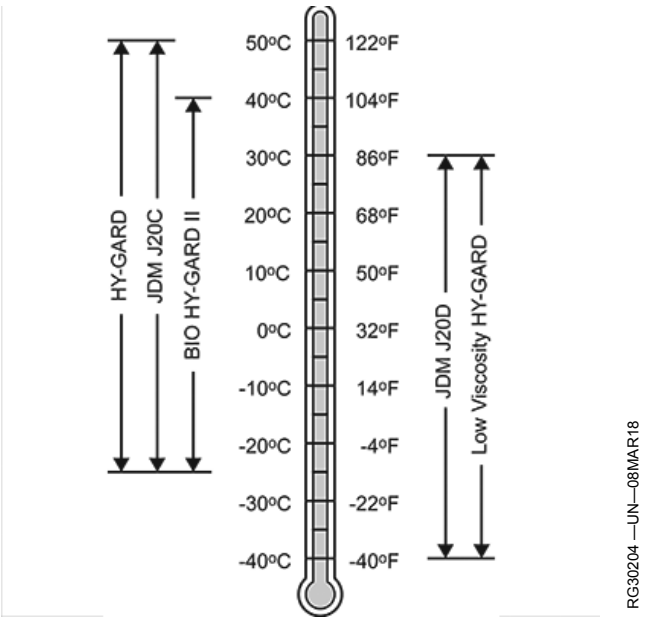

Oils for Air Temperature Ranges

Hy-Gard is a trademark of Deere & Company
Bio Hy-Gard is a trademark of Deere & Company

[1]Bio Hy-Gard II meets or exceeds the minimum biodegradability of 80% within 21 days according to CEC-L-33-T-82 test method. Bio Hy-Gard II should not be mixed with mineral oils, because this reduces the biodegradability and makes proper oil recycling impossible.

DX,OIL1 -19-13JAN18-1/1

Multipurpose Extreme Pressure (EP) Grease

IMPORTANT: For automated lubrication systems different ambient air temperatures need to be considered.

Use grease based on NLGI consistency numbers and the expected air temperature range during the service interval.

John Deere SD Polyurea Grease is preferred.

The following greases are also recommended:

- John Deere HD Lithium Complex Grease
- John Deere Grease-Gard™ Premium Plus

Other greases may be used if they meet the following:

- NLGI Performance Classification GC-LB
- ISO-L-X-BDHB 2 or DIN KP 2 N-10 Lithium Complex, Non-Synthetic Base Oil (100 to 220 mm2/s @ 40°C)

IMPORTANT: Some types of thickeners, base oils, and additives used in greases are not compatible with others. Mixing greases should be avoided. Consult your grease supplier before mixing different types of grease.

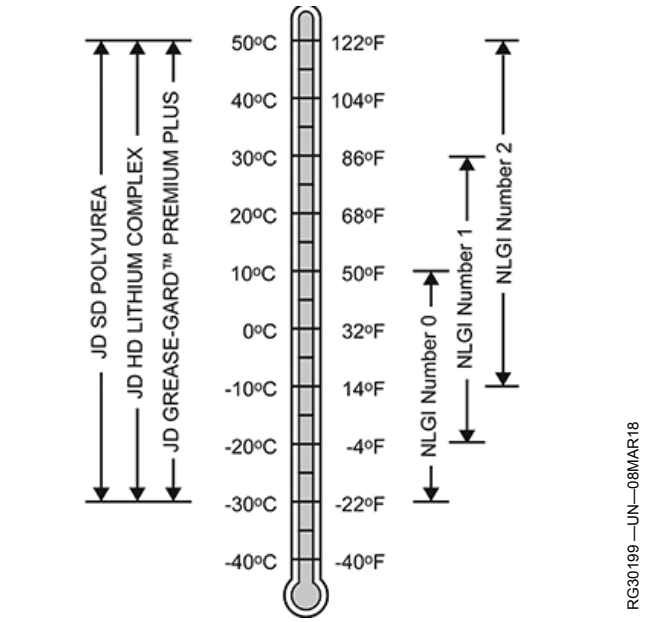

Greases for Air Temperature Ranges

Grease-Gard is a trademark of Deere & Company

DX,GREA1 -19-13JAN18-1/1

Mixing of Lubricants

In general, avoid mixing different brands or types of oil. Oil manufacturers blend additives in their oils to meet certain specifications and performance requirements.

Mixing different oils can interfere with the proper functioning of these additives and degrade lubricant performance.

Consult your John Deere dealer to obtain specific information and recommendations.

DX,LUBMIX -19-18MAR96-1/1

Alternative and Synthetic Lubricants

Conditions in certain geographical areas may require lubricant recommendations different from those printed in this manual.

Some John Deere brand coolants and lubricants may not be available in your location.

Consult your John Deere dealer to obtain information and recommendations.

Synthetic lubricants may be used if they meet the performance requirements as shown in this manual.

The temperature limits and service intervals shown in this manual apply to John Deere branded fluids or fluids that have been tested and/or approved for use in John Deere equipment.

Re-refined base stock products may be used if the finished lubricant meets the performance requirements.

DX,ALTER -19-13JAN18-1/1

Lubricant Storage

Your equipment can operate at top efficiency only when clean lubricants are used.

Use clean containers to handle all lubricants.

Store lubricants and containers in an area protected from dust, moisture, and other contamination. Store containers on their side to avoid water and dirt accumulation.

Make certain that all containers are properly marked to identify their contents.

Properly dispose of all old containers and any residual lubricant they may contain.

DX,LUBST -19-11APR11-1/1

Oilscan™ and CoolScan™

Oilscan™ and CoolScan™ are John Deere sampling programs to help you monitor machine performance and identify potential problems before they cause serious damage.

Oil and coolant samples should be taken from each system before its recommended change interval.

Check with your John Deere dealer for the availability of Oilscan™ and CoolScan™ kits.

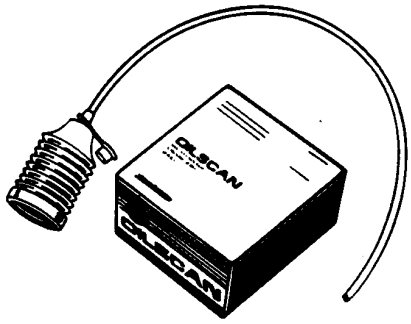

T6828AB —UN—15JUN89

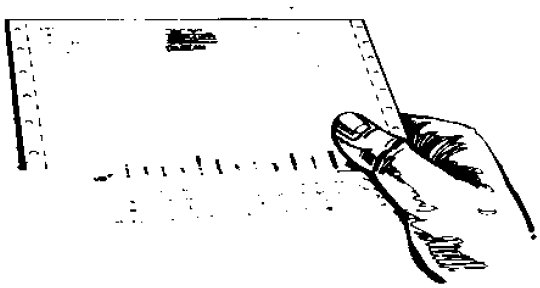

T6829AB —UN—26AUG11

Oilscan is a trademark of Deere & Company
CoolScan is a trademark of Deere & Company

DX,OILSCAN -19-13SEP11-1/1

Additional Service Information

This is not a detailed service manual. It contains only information needed for operation and routine maintenance. If more detailed service information is required, refer to Parts Catalog and/or a Technical Manual available at Dealership.

SD74272,000023D -19-17MAR20-1/1

Service Tractor Safely

PY39692 —UN—07FEB17

Cab

PY39693 —UN—07FEB17

OOS

Disengage power to attachments and stop engine before making any repairs or adjustments.

Do not overspeed engine.

Keep the vehicle and attachments in good operating condition.

Keep safety devices in place and in working condition.

Keep all nuts, bolts, and screws tight to be sure the equipment is in safe working condition.

Before you work on any part of the engine, stop the engine and let it cool. Hot engine parts can burn skin on contact.

Never start engine unless gear shift lever or PowrReverser™ lever (if equipped) is in NEUTRAL position.

Be careful to prevent clothing, jewelry, or long hair from getting caught in the fan blades, drive belt, or any other moving engine parts.

Unauthorized modifications to the machine may impair performance and/or safety and affect machine life.

VP27597,0000346 -19-07FEB17-1/1

Service Interval Chart—Daily or 10 Hours / Every 50 Hours / First 100 Hours / Every 250 Hours / Every 375 Hours

Item	Daily or 10 Hours	Every 50 Hours	First 100 Hours	250 Hours	375 Hours
Check engine oil level	•				
Check coolant level	•				
Drain water and sediment from fuel tank and fuel filter[a]	•				
Lubricate front axle pivot pins [b]	•				
Lubricate rear axle bearings [b]	•				
Lubricate tie rod ends(2WD)[b]	•				
Lubricate Steering Linkage(2WD)[b]	•				
Clean and check battery		•			
Inspect all tires		•			
Lubricate front axle pivot pins		•			
Check transmission-hydraulic system oil level		•			
Check MFWD axle hub oil level		•			
Inspect tractor for loose nuts and bolts		•			
Lubricate Steering Linkage (2WD)		•			
Replace transmission-hydraulic oil filter			•		
Change engine break-in oil and filter			•[c]		
Inspect hose clamps on the air intake system & coolant system			•		
Service air cleaner[d]				•	
Check oil level in MFWD axle and wheel hubs				•	
Inspect alternator/fan belt				•	
Lubricate 3-point hitch				•	
Change engine oil					•[e]
Replace transmission-hydraulic filter				•	
Adjust clutch free play [f]				•	
Check neutral start system				•	
Brake Bleeding				•	

[a]The fuel filter must be drained when water or debris is evident in the sediment bowl. If this reoccurs more than three days in a row, then drain the sediment from the fuel tank. Run engine for a minimum of 20 seconds, re-check and if more water collects, drain the fuel tank.
[b]Only necessary in extremely wet or muddy conditions
[c]Oil w/ standard JD oil
[d]Service more often if operated in extremely dusty conditions.
[e]Oil w/ Premium JD oil
[f]For Mechanical dry clutch

RP32883,0000A92 -19-02DEC19-1/1

Service Interval Chart—Every 500 Hours / Every 600 Hours / Every 1200 Hours / Annually / 2000 Hours or Two Years / 3000 Hours ot Three Years

Item	500 Hours	600 Hours	1200 Hours	Annually	2000 Hours / Two Years	3000 Hours / Three Years
Clean operator enclosure/cab air filters[a]	•					
Replace engine oil filter and filter	•					
Replace fuel filter	•					
Re-pack front wheel bearing (2WD)		•				
Check and tighten all hoses and hose clamps		•				
Clean engine crankcase vent tube (OCV)		•				
Change MFWD axle and wheel hub oil		•				
Check cooling system for leaks		•				
Lubricate rear axle bearings		•				
Check engine idle speeds		•				
Check front axle pivot pin		•				
Change transmission-hydraulic oil and filter			•			
Clean transmission-hydraulic pickup screen			•			
Engine valve lash setting			•			
Clean PowrReverse™ hydraulic pressure valve strainer			•			
Replace air cleaner elements				•		
Inspect seat belt				•		
Replace operator enclosure/cab air filters				•		
Drain, flush and refill engine cooling system [b]					•	
Clean Diesel Particulate Filter (DPF)						•

[a]*Service more often if operated in extremely dusty conditions.*
[b]*See your John Deere dealer for service.*

RP32883,0000A91 -19-02DEC19-1/1

Service—As Required

- Adjust Hand Throttle Friction
- Inspect Engine Air Cleaner Elements[1]
- Inspect Engine Air Intake System[1]
- Check operator enclosure/cab air filters
- Service air-conditioning system
- Clean Front Grille, Side Screens, Radiator, Condenser (cab) and Oil, Fuel or Air Coolers (if equipped)
- Clean and Check Battery
- Drain water and sediment from fuel tank and fuel filter
- Lubricate Operator Seat Slide Rails
- Replace Bulbs; Floodlights, Headlights, Tail/Turn Lights and Warning Lights
- Adjust Headlights
- Service Exhaust Filter

[1]*Service more often if operated in extremely dusty conditions.*

SD74272,00004CA -19-13MAR13-1/1

Observe Service Intervals

Using hour meter (A) as a guide, perform all services at the hourly intervals indicated. Keep a service record on charts provided in the Lubrication and Maintenance Record Charts section.

IMPORTANT: Recommended service intervals are for average conditions. Service more often if tractor is operated under adverse conditions.

A—Hour Meter

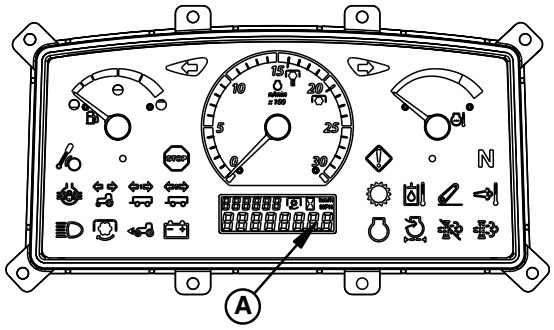

PY39690 —UN—07FEB17

VP27597,0000345 -19-12JUL17-1/1

Using High-Pressure Washers

IMPORTANT: Directing pressurized water at electronic/electrical components or connectors, bearings and hydraulic seals, fuel injection pumps or other sensitive parts and components can cause product malfunctions. Reduce pressure, and spray at a 45 to 90 degree angle.

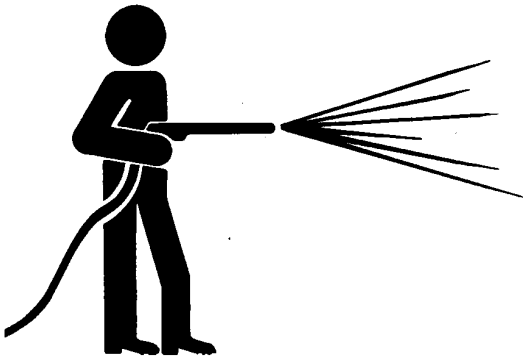

T6642EJ —UN—18OCT88

SD74272,0000244 -19-17MAR20-1/1

Using Compressed Air

IMPORTANT: Directing pressurized air at electronic/electrical components or connectors, can cause buildup of static electricity and product malfunctions.

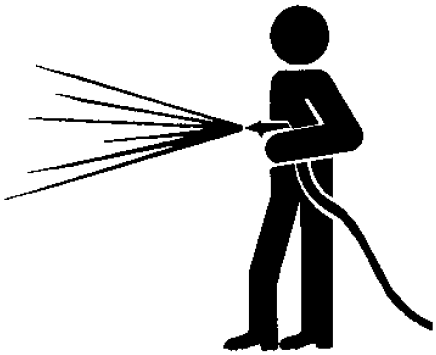

RW56455 —UN—30JUN97

SD74272,0000245 -19-17MAR20-1/1

Check and Adjust Clutch Pedal Free Play

For Mechanical Dry Clutch

Measure free play (A) at top of pedal stroke. Adjust linkage to obtain 20 mm to 25 mm free play.

To adjust linkage, loosen lock nut (B), unlatch the connecting clip pin (C) and remove. Rotate clevis (D). After making adjustment, replace clip, and recheck free play. When free play is correct, tighten lock nut.

A—Clutch Pedal Free Play
B—Lock Nut
C—Clip Pin
D—Clevis

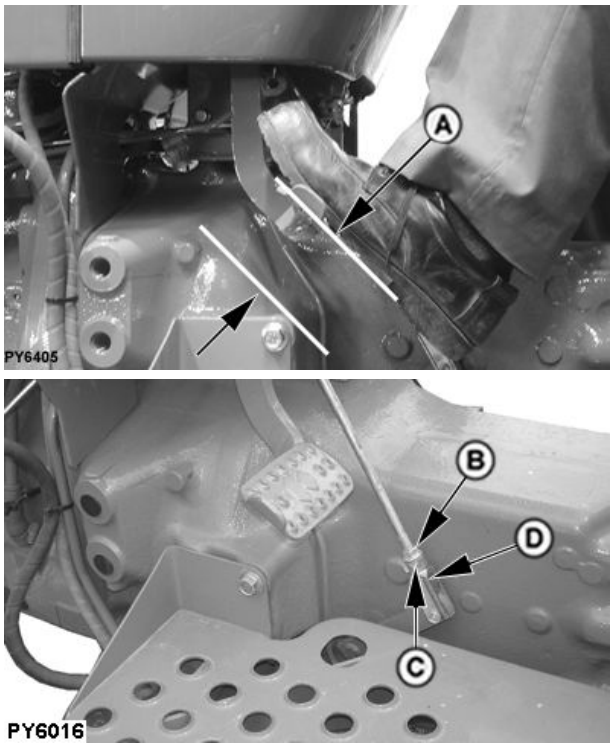

PY6405 —UN—23OCT06

PY6016 —UN—27JUL06

Pedal linkages

RP32883,0000BC7 -19-21JUL20-1/1

Opening Hood

Pull latch handle (A) and lift hood up.

A—Handle

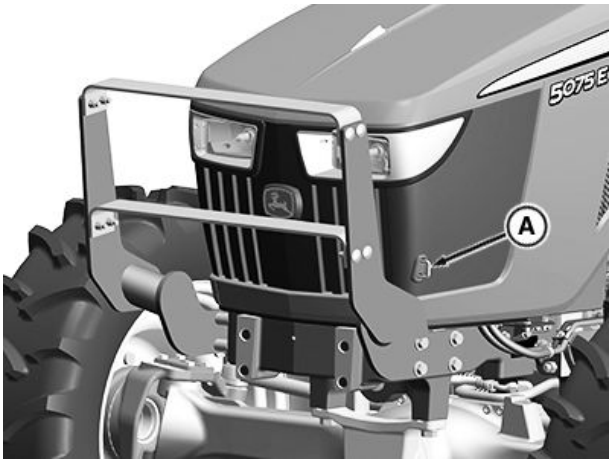

PY40783 —UN—22MAR17

Opening the Hood

VP27597,0000461 -19-21MAR17-1/1

Inspect Engine Air Intake Filters

Service Interval—250 Hours

A dual element air cleaner is standard. A dirty primary element is indicated when air filter restriction indicator on instrument panel illuminates. A dirty element results in loss of power or excessive smoke.

Clean primary element when indicator on instrument panel illuminates or every 250 hours.

Replace both elements at the same time annually, regardless of condition.

1. Raise hood.
2. Release Latch (B) and remove Cover (C) from sideways.

A—Lug
B—Latch
C—Cover

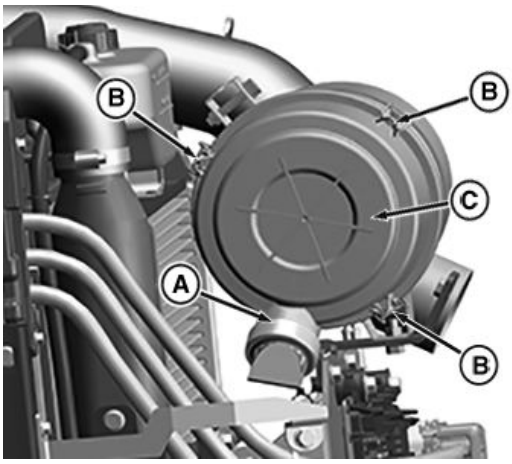

PY40784 —UN—22MAR17

Open Air Intake Cover

Continued on next page

VP27597,0000462 -19-12JUL17-1/3

3. Rotate Primary filter element anticlock wise to remove. Do not use excessive force. If filter does not pull out with ease, check for unlock position to remove safely.
4. Clean primary element by tapping gently on palm of your hand. DO NOT tap element against a hard surface. Clean element with blowing compressed air (Max pressure of 1.3 Bar / 20 PSI). Hold nozzle next to inner surface, and move up and down pleats.

IMPORTANT: DO NOT direct air against outside of element, as it forces dirt through to inside.

5. Clean out any dirt in canister taking care not to damage the secondary filter element (B).
6. Secondary filter element (B) is removed only when being replaced. If it looks dirty or damaged do not attempt to clean, replace it. Removal of the secondary element (B) is similar to removal of the primary element.
7. Install secondary filter element (B) carefully and lock the filter by rotating the ¼ turn in clockwise direction.

IMPORTANT: If primary filter is not damaged and indicator on instrument panel remains illuminated, replace both filters.

8. Installation of the primary filter element (A) is similar to installation of the secondary filter element (B).

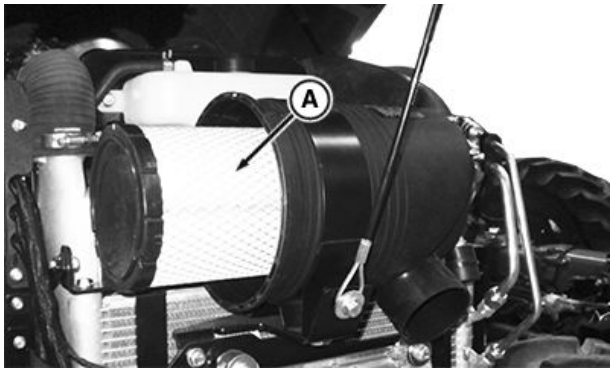

Primary Element

PY40791 —UN—22MAR17

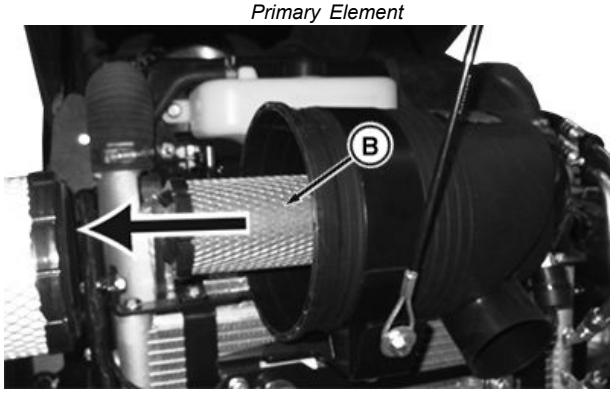

Secondary Element

PY40790 —UN—22MAR17

A—Primary Filter Element **B—Secondary Filter Element**

VP27597,0000462 -19-12JUL17-2/3

9. Close the cover (C) and raise the latch (B).

NOTE: Make sure arrow on cover points downwards (not be exactly vertical down) and there should not be gap between cover and canister.

10. Lower hood.

A—Lug
B—Latch
C—Cover

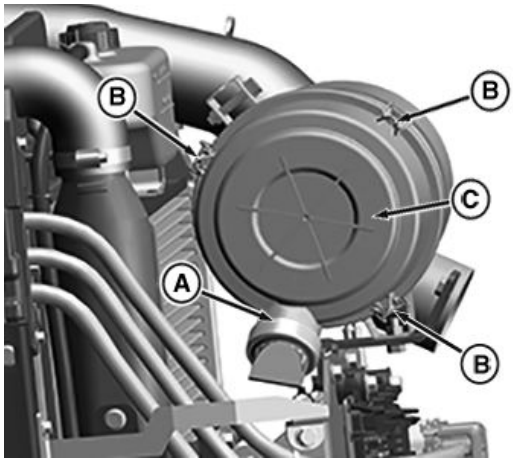

Install Filter Element

PY40784 —UN—22MAR17

VP27597,0000462 -19-12JUL17-3/3

Replace Engine Air Intake Filters

Service Interval—Annually*
** Interval varies according to operating conditions*

1. Raise hood.
2. Release Latch (B) and remove Cover (C) from sideways.

A—Lug
B—Latch
C—Cover

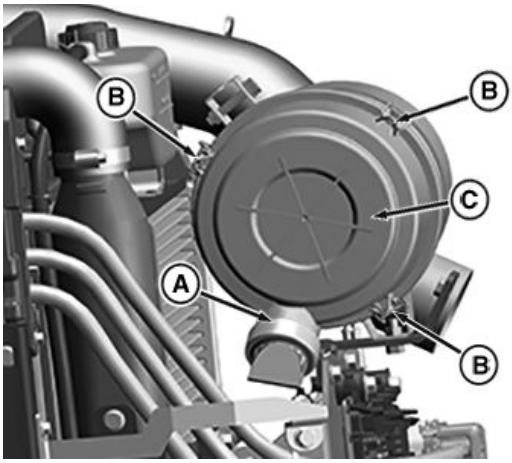

PY40784 —UN—22MAR17

Open Air Intake Cover

VP27597,0000463 -19-12JUL17-1/3

3. Rotate Primary element filter (A) anticlock wise to remove. Do not use excessive force. If filter does not pull out with ease, move side-to-side to remove safely.
4. Removal of Secondary filter (B) is similar to removal of Primary filter (A).

NOTE: When installing the air cleaner canister, make sure that the dust unloader valve is facing down.

5. Install new secondary filter element (B) carefully and lock the filter by rotating the ¼ turn in clockwise direction.
6. Installation of new primary filter element (A) is similar to installation of the secondary filter element (B).

NOTE: Make sure that both of the primary filter and secondary filter are sealed, seated and installed properly. Also clips on the outer cover of the air cleaner are fixed properly.

A—Primary Filter Element
B—Secondary Filter Element

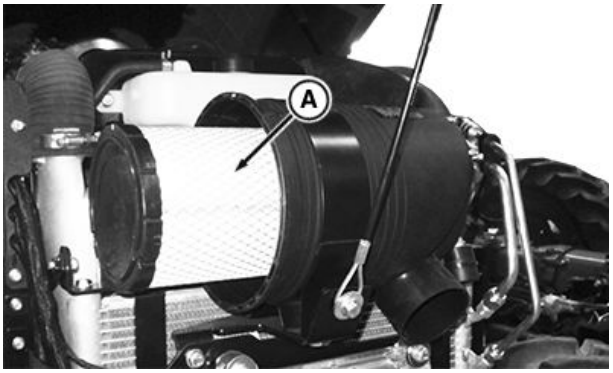

PY40791 —UN—22MAR17

Primary Element

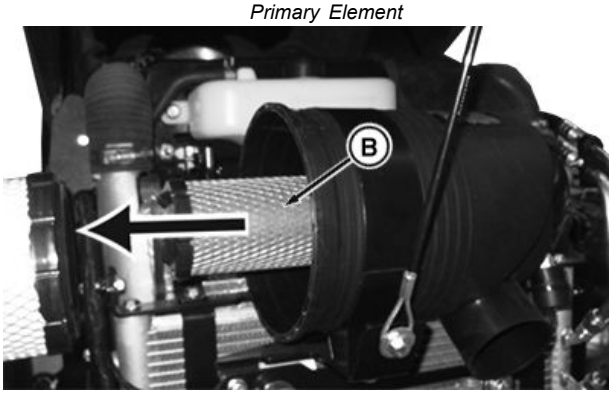

PY40790 —UN—22MAR17

Secondary Element

Continued on next page

VP27597,0000463 -19-12JUL17-2/3

7. Close cover (C) and raise the latch (B).

NOTE: Make sure arrow on cover points downwards (not be exactly vertical down) and maintain no gap between cover and canister

8. Lower hood.

A—Lug
B—Latch
C—Cover

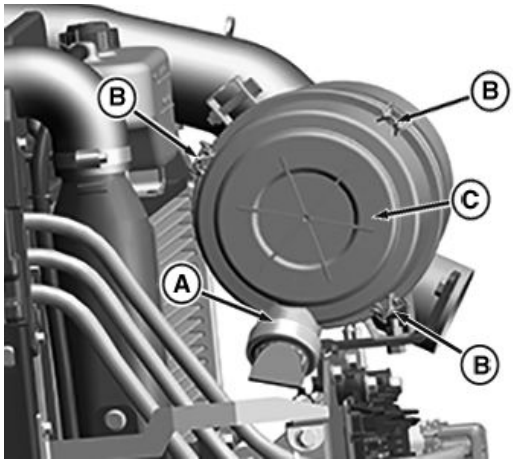

PY40784 —UN—22MAR17

Install Filter Element

VP27597,0000463 -19-12JUL17-3/3

Inspect Engine Air Intake System

IMPORTANT: Do not overtighten clamps.

Make sure all air intake clamps are tight.

Check all pipes for dents and other imperfections. Replace as necessary.

Check all hoses for cracks that may cause leaks or possible failure. Replace as necessary.

SD74272,00002F4 -19-24JUL12-1/1

Clean Engine Crankcase Vent Tube

Service Interval — 600 Hours

CAUTION: Reduce compressed air to less than 210 kPa (2 bar) (30 psi) when using for cleaning purposes. Clear area of bystanders, guard against flying chips and wear personal protection equipment, including eye protection.

1. Locate crankcase vent port on top right-hand side of engine.
2. Remove crankcase vent tube (A) from open crankcase ventilation filter.
3. Wash in solvent or blow clean with compressed air. Inspect tube for damage, replace if necessary.
4. Install vent tube. Make sure vent tube is not kinked or pinched.

A—Crankcase Vent Tube

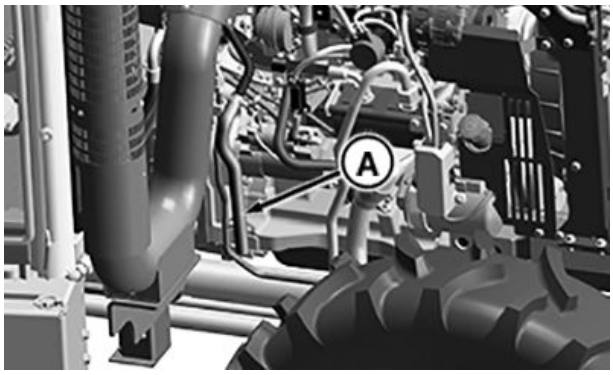

PY40785 —UN—22MAR17

Left-Hand Side Shown For Cab Tractors

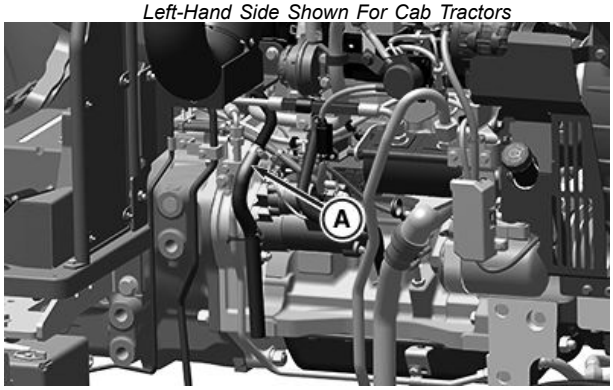

PY40786 —UN—22MAR17

Left-Hand Side Shown For OOS Tractors

VP27597,0000464 -19-12JUL17-1/1

Check Engine Idle Speeds

Service Interval— 600 Hours

Slow (turtle) idle speed is attained with hand throttle all the way down.

Fast (rabbit) idle speed is attained with hand throttle all the way up.

NOTE: Hand throttle position will directly relate with label on right-hand side of instrument panel.

If idle speeds are not correct, see your John Deere dealer.

5045E, 5055E, 5065E and 5075E—Specification

Slow Idle—Speed..... 890—910 rpm
Fast Idle—Speed.....2190—2210 rpm Maximum

SD74272,00004D0 -19-02MAR15-1/1

Cleaning the Exhaust Filter Aftertreatment

The exhaust filter will require maintenance periodically. Some of the maintenance will be transparent to the operator. During continuous heavy loads and other conditions, the engine may create enough heat to naturally remove accumulated soot in the exhaust filter. When the exhaust filter has accumulated higher levels of soot, the display panel may request (depending on predefined user settings) an exhaust filter cleaning. During this request, the equipment is required to be located or moved to a suitable location with adequate ventilation.

To the right are symbols which may be seen on the operator interface.

IMPORTANT: The area above and surrounding the engine during a manual exhaust filter cleaning should be free of any flammable objects as temperatures can reach as high as 550 °C (1022 °F).

H94828 —UN—13OCT09

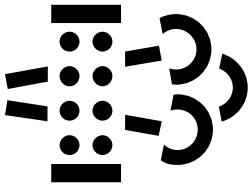

Exhaust Filter Cleaning is Needed

LV14784 —UN—16SEP11

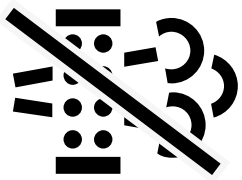

Exhaust Filter Cleaning is Disabled

H94829 —UN—13OCT09

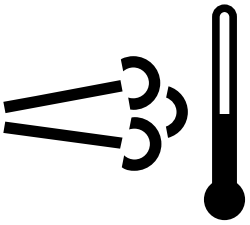

Emission System Temperature is High or Exhaust Filter Cleaning is Underway

SP21231,00002A3 -19-30MAY12-1/1

Diesel Particulate Filter Maintenance and Service

The Exhaust Filter includes the Diesel Oxidation Catalyst and Diesel Particulate Filter (DPF). The DPF is designed to retain residual ash, which is a noncombustible result of additives used in crankcase lubrication oils and the fuel. The DPF provides many hours of maintenance free operation. At some point the DPF will require professional service to remove the accumulated ash. The exact number of hours of operation before service is required will vary depending upon the engine's power category, duty cycle and operating conditions, engine oil ash content, and fuel quality. Adhering to John Deere's recommended oil and fuel specifications will maximize the hours of operation before professional DPF service is required.

As the engine owner, you are responsible for performing the required maintenance described in your Operator's manual. The exhaust filter's dash lamp indicator or the diagnostic codes will indicate when the DPF needs ash removal service. The ash removal service interval for engines below 175 hp/130kW will be at least 3,000 hours while engines at or above 175 hp/130 kW will be at least 4,500 hours.

The removal of DPF ash must be done by removing the DPF from the machine and placing it into specialized equipment. Do not remove ash by using water or other chemicals. Removing ash by these methods may damage the material securing the DPF in its canister, resulting in the loosening of the DPF element in the canister and subjecting it to damage from vibration.

Failure to follow the approved ash removal methods may violate U.S. federal, state and local hazardous waste laws, along with damage to the DPF resulting in potential denial of the Diesel Exhaust Filter emissions warranty. It is strongly recommended you take the DPF to an authorized John Deere service location or other qualified service provider for servicing.

SP21231,00002A4 -19-18JUN12-1/1

Exhaust Filter / Diesel Particulate Filter Ash Handling and Disposal

CAUTION: Under federal, state, and/or local laws or regulations, Diesel Particulate Filter ash may be classified as a hazardous waste. Hazardous wastes must be disposed of in accordance with all applicable federal, state and local laws or regulations governing hazardous waste disposal.

Only a qualified service provider should remove ash from the DPF. Personal protective equipment and clothing, maintained in a sanitary and reliable condition, should be used when handling and cleaning a DPF. See your John Deere dealer or qualified service provider for assistance.

SP21231,00002A5 -19-30MAY12-1/1

Exhaust Filter Disposal

CAUTION: Proper management of an Exhaust Filter that has reached the end of its useful life is required, since the ash or catalyst material in the device may be classified as hazardous waste under federal, state, and/or local laws or regulations. Used Exhaust Filters, which include the Diesel Particulate Filter, may be exchanged at any John Deere dealer or qualified service provider.

SP21231,00002A6 -19-30MAY12-1/1

Tighten Hose Clamps

Service Interval—100 Hours

IMPORTANT: Do not overtighten clamps causing washers to be over compressed.

Check the following system hose clamps. Tighten as necessary.

- Engine Air Induction System
- Engine Cooling System
- Hydraulic System
- Fuel System

Specification	
Hose Clamps—Torque	5 N·m (44 lb-in.)

SD74272,00004D2 -19-14MAR13-1/1

Inspect Tractor for Loose Hardware

Service Interval—Weekly / 50 Hours

Specification	
Front Ballast Weight Retaining Bolts—Torque	230 N·m (170 lb.-ft.)
Rear Axle Rim-to-Disk Bolts (Steel Disk) —Torque	245 N·m (180 lb.-ft.)
Rear Axle Disk-to-Flange Bolts (Steel Disk) —Torque	550 N·m (406 lb.-ft.)
Multi-Position Rear Wheels Rim-to-Disk Bolts (Steel Disk)—Torque	245 N·m (180 lb.-ft.)
Multi-Position Rear Wheels Disk-to-Flange Bolts (Steel Disk)—Torque	175 N·m (130 lb.-ft.)
Front Axle Bolts—Torque	480 N·m (350 lb.-ft.)
ROPS Mounting Bolts—Torque	410 N·m (302 lb.-ft.)
Cab Mounting Bolts—Torque	350 N·m (258 lb.-ft.)

SD74272,00002F9 -19-14AUG14-1/1

Check Neutral Start System—PowrReverser™ Transmission (If Equipped)

Service Interval—250 Hours

Transmission Control

1. Make sure that everyone is clear of tractor.
2. Fully depress clutch and brake pedals.
3. Move PowrReverser lever (A) to FORWARD or REVERSE position.
4. Start engine. If engine starts in either of these positions, neutral start system should be repaired. See your John Deere dealer **immediately**.

Engine should start with lever in NEUTRAL position only.

PTO Switch

1. Fully depress clutch and brake pedals.
2. **Cab:** Pull PTO lever (B) upward to ENGAGED position.

   OOS: Pull PTO lever (B) outward to ENGAGED position.
3. Start engine. If engine starts in this position, neutral start system should be repaired. See your John Deere dealer **immediately**.

Engine should start with lever in DISENGAGED position only.

A—PowrReverser Lever **B—PTO Control Switch**

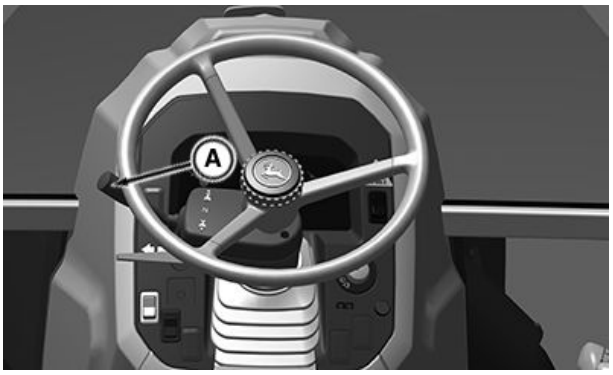

PY40780 —UN—22MAR17

PowrReverser Lever Shown For Cab Tractors

PY40779 —UN—22MAR17

PowrReverser Lever Shown For OOS Tractors

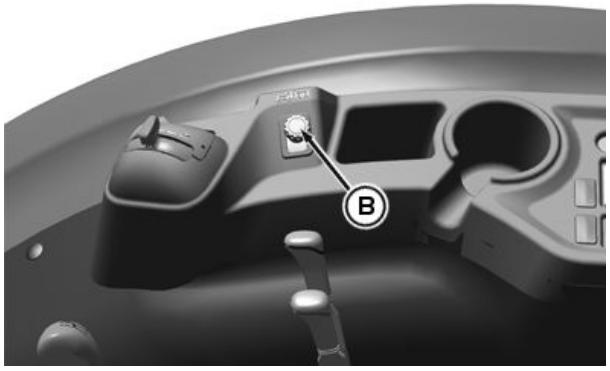

PY41769 —UN—13JUL17

Cab Shown

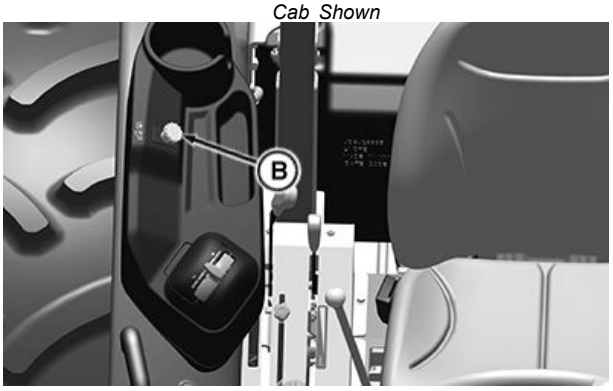

PY40781 —UN—22MAR17

OOS shown

VP27597,0000465 -19-13JUL17-1/1

Inspect Seat Belt

Service Interval—Annually

CAUTION: If the seat belt system, including the mounting hardware, buckle, belt or retractor show any sign of damage such as cuts, fraying, extreme or unusual wear, discoloration or abrasion, the entire seat belt system should be replaced immediately. Replace the belt system only with replacement parts approved for your machine.

Inspect seat belts (A) and mounting hardware. If seat belts need to be replaced, see your John Deere dealer.

A—Seat Belt

PY39631 —UN—30JAN17

For OOS Tractors

PY40789 —UN—22MAR17

For Cab Tractors

VP27597,0000466 -19-21MAR17-1/1

Adjust Hand Throttle Friction

Adjust spring tension by loosening or tightening cap screw and lock nut (A) until throttle lever movement is smooth throughout range of travel with only slight drag.

Adjust throttle friction cap screw until specified amount of resistance is measured at throttle lever knob.

Specification	
Throttle Friction Cap Screw—Resistance	49 N (11 lb. - force)

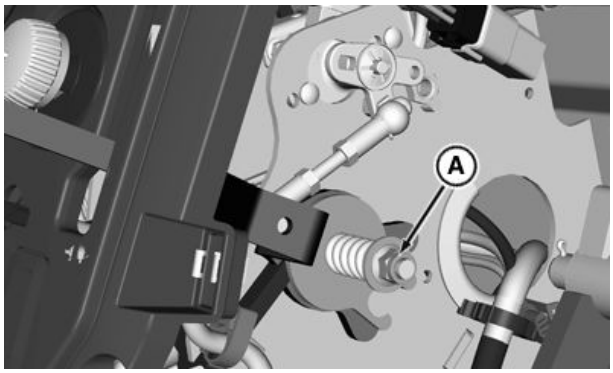

PY18377 —UN—14APR14

Under Dashboard

A—Cap Screw and Lock Nut

VP27597,0000468 -19-21MAR17-1/1

Inspect Tires

Service Interval—Weekly/50 Hours

- Check tires daily for damage or noticeably low pressure.
- Have any cuts or breaks repaired as soon as possible.
- Protect tires from exposure to sunlight, petroleum products and chemicals.
- Drive carefully. Try to avoid rocks and sharp objects.

IMPORTANT: Minimum pressures may be used only for light loads and only if tractor has no added weight. If you install ballast or mounted implements, or if you pull heavy loads, increase pressure.

- Check tires with an accurate gauge having 10 kPa (0.1 bar) (1 psi) graduations. If tires contain liquid ballast, use a special air-water gauge and measure with valve stem positioned toward bottom.

Refer to TIRE INFLATION PRESSURE CHART in Wheels, Tires and Treads section.

SD74272,00002FE -19-24JUL12-1/1

Tubeless Tire Repair

Certain sizes of tires are tubeless. Small tubeless tire punctures can be temporarily repaired without dismounting tire, avoiding down time during busy season. (See your John Deere dealer or tire service store for repair kits and instructions.)

IMPORTANT: A permanent, inside-out repair should be made as soon as possible to prevent tire damage.

SD74272,00002FF -19-24JUL12-1/1

Clean Cab Air Filters

Service Interval—500 Hours*
** Interval can vary according to operating conditions*

Recirculation Filters (Inside Cab)

CAUTION: The air quality system air filters are not designed to filter out harmful chemicals. Follow the instructions in the implement operator's manual and those given by the chemical manufacturer when using agricultural chemicals.

NOTE: There are filters on BOTH sides of cab. Left-hand side is shown.

1. Pry off cover (A). (Pull down along window.)
2. Remove wing screw (B), retainer (C) and filter (D).
3. Inspect filter for holes or damage. Inspect rubber seal for cracks or wear. Replace as necessary.

NOTE: Do not clean filter with water or compressed air. Cleaning the filter is not recommended and should be replaced as needed.

4. Replace filter when it becomes dirty. It may require replacing filter more often in dusty conditions.
5. Install filter with rubber seal toward retainer (C).
6. Install retainer, wing screw and cover.
7. Repeat procedure on opposite side.

A—Cover
B—Wing Screw
C—Filter Retainer
D—Filter

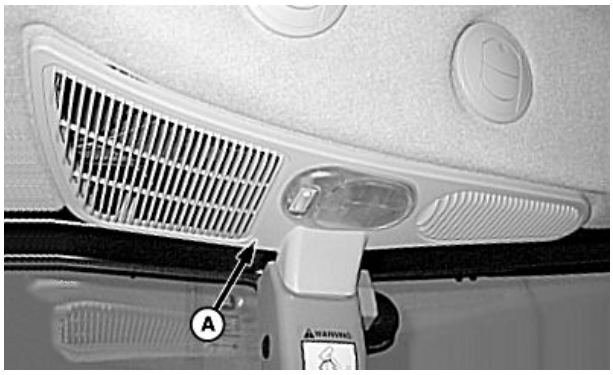

P14487 —UN—30OCT07

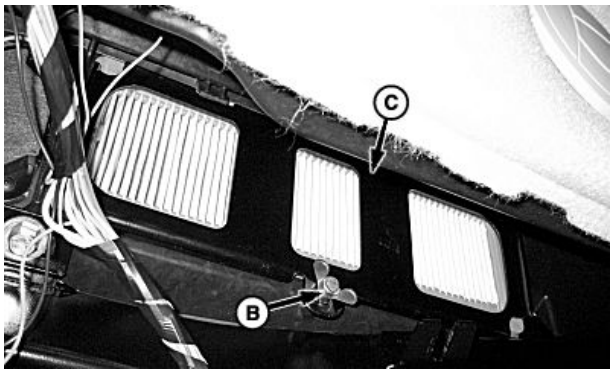

P14488 —UN—30OCT07

P14490 —UN—30OCT07

Continued on next page

VP27597,000036E -19-23FEB17-1/2

Fresh Air Filters (Outside Cab)

1. Remove two wing screws (A) and cover (B).
2. Remove wing screws (C), retainer (D) and filter (E).
3. Inspect filter for holes or damage. Inspect rubber seal for cracks or wear. Replace as necessary.

NOTE: Do not clean filter with water or compressed air. Cleaning the filter is not recommended and should be replaced as needed.

4. Replace filter when it becomes dirty. It may require replacing filter more often in dusty conditions.
5. Install filter with rubber seal toward cab.
6. Install retainer and wing screws.
7. Install cover and wing screws.
8. Repeat procedure on opposite side.

A—Wing Screws
B—Filter Cover
C—Wing Screws
D—Filter Retainer
E—Filter

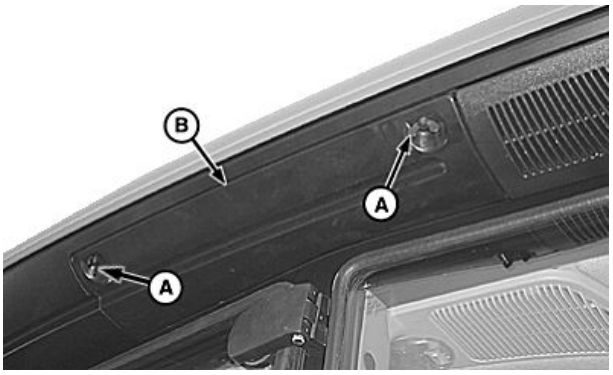

P14491 —UN—30OCT07

Under Roof, Above Cab Door

P14489 —UN—30OCT07

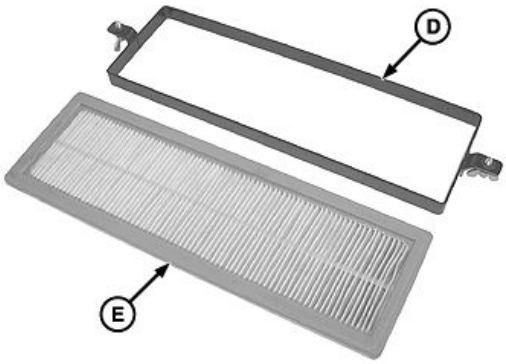

P14492 —UN—30OCT07

VP27597,000036E -19-23FEB17-2/2

Service Air Conditioner (Cab)

CAUTION: Refrigerant under pressure. Improper servicing may cause refrigerant to penetrate eyes and skin or cause burns.

IMPORTANT: R134a refrigerant must be used. This requires special equipment and procedures. See your John Deere dealer.

NOTE: Some oil seepage from compressor shaft seal is normal.

Check the following if air conditioner will not cool, or if cooling is intermittent:

- If air conditioner clutch slips after tractor has been in storage, compressor may be stuck. Stop engine and turn key switch to OFF position. Remove nut (B) and clutch cover (A). Rotate clutch hub back and forth to free compressor.

A—Clutch Cover **B—Nut (3 Used)**

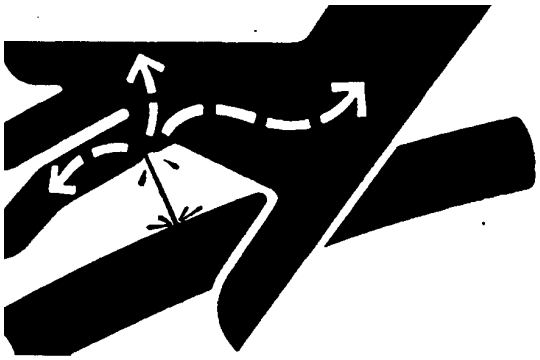

X9811 —UN—23AUG88

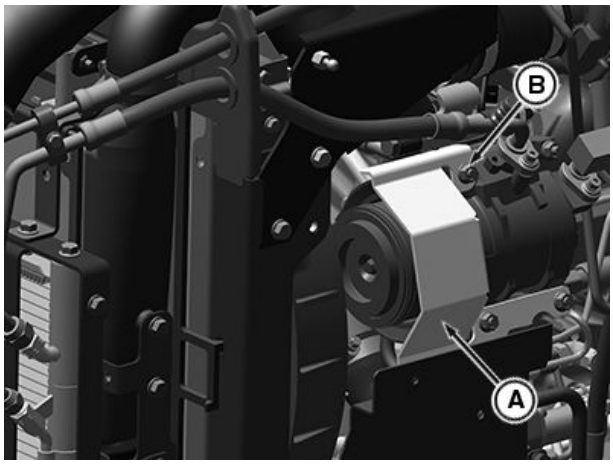

PY41726 —UN—11MAY17

VP27597,000036F -19-11MAY17-1/2

- Run engine at 2000 rpm. Push top half of A/C and defrost switch (C) and set blower control knob (B) to HIGH position (A). If air flow is not cool, system may be low on refrigerant. See your John Deere dealer.
- If cooling is intermittent, clean front grille, side vents, radiator and condenser . If problem is not solved, see your John Deere dealer.
- Inspect operator enclosure (cab) filters for restriction. (See **Clean cab air filters** in this section). If problem persists, see your John Deere dealer.

A—High Position **C—A/C and Defrost Switch**
B—Blower Control Knob

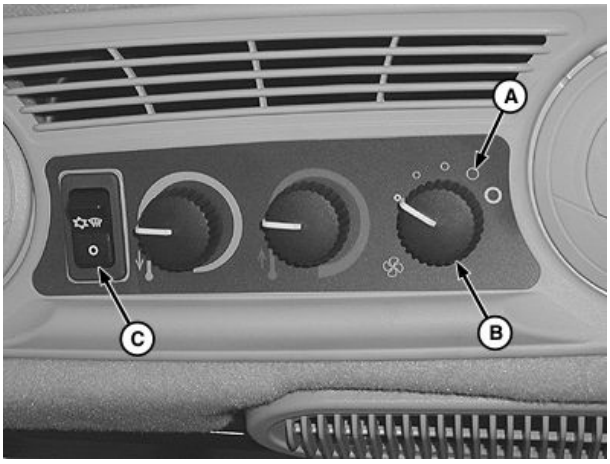

LV8577 —UN—14AUG03

VP27597,000036F -19-11MAY17-2/2

Cleaning Engine Compartment

Clean as necessary, especially around potential hot spots such as turbocharger, exhaust manifold and muffler.

IMPORTANT: DO NOT use steam cleaner or high pressure washer in area of fan drive. High pressure could force dirt past seals in drive hub.

Never steam clean or pour cold water on an injection pump that is operating or hot. Pump could seize.

SD74272,0000302 -19-24JUL12-1/1

Keep ROPS Installed Properly (OOS)

CAUTION: Make certain all parts are installed correctly if roll-over protective structure (ROPS) is loosened or removed for any reason. Tighten mounting bolts to proper torque.

The protection offered by ROPS is impaired if ROPS is subjected to structural damage, as in an overturn incident, or is in anyway altered by welding, bending, drilling, or cutting. A damaged ROPS should be replaced, not reused. Any alteration to the ROPS must be approved by the manufacturer.

When installation of equipment on a machine necessitates loosening or removing Roll-Over Protective Structure (ROPS) (A), mounting bolts (B) should be tightened to specification.

	Specification
ROPS Mounting Bolts—Torque	420 +/-10 N·m (310 lb·ft)

Inspect ROPS mounting hardware every 250 hours for proper torque or replacement.

TO LOWER ROPS CROSSBAR (A):

1. Remove quick-lock pins (D) and headed pins (C) on both side of ROPS.
2. Lower crossbar (A) of ROPS onto stops.
3. Reinstall pins (C and D) into bottom holes in ROPS to lock down crossbar.

CAUTION: Always keep upper part of ROPS pinned in vertical position (as pictured) when operating tractor. If tractor is operated with ROPS folded (for example, to enter a low building) drive with extreme caution and DO NOT use seat belt.

Fold the ROPS up again as soon as the tractor is operated under normal conditions.

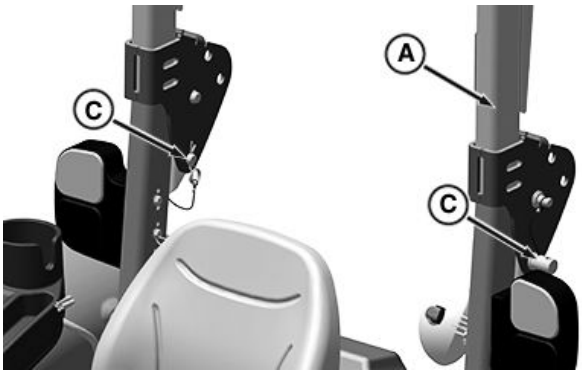

PY40778 —UN—22MAR17

ROPS Crossbar and Headed Pins

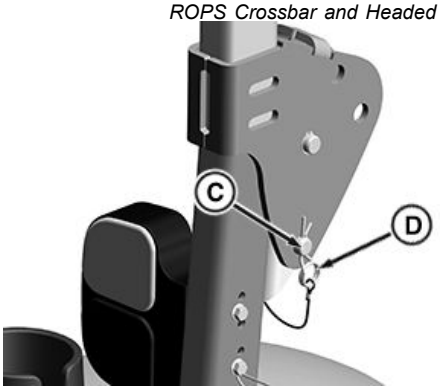

PY40788 —UN—22MAR17

Headed Pins and Quick-Lock Pin

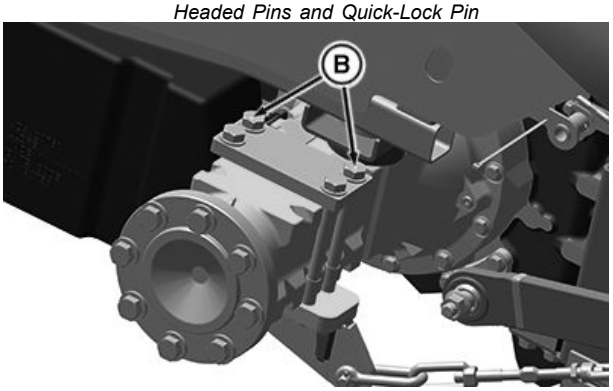

PY40787 —UN—22MAR17

Mounting Bolts (8 Used)

A—ROPS Crossbar
B—Mounting Bolts (8 used)
C—Headed Pins (2 used)
D—Quick-Lock Pin

Continued on next page

VP27597,0000467 -19-12JUL17-1/2

TO PUT ROPS IN OPERATING POSITION:

Lift crossbar (A) of ROPS to vertical position. Install pins (C) and quick-lock pins (D) into bottom holes in ROPS to lock in position.

A—ROPS Crossbar

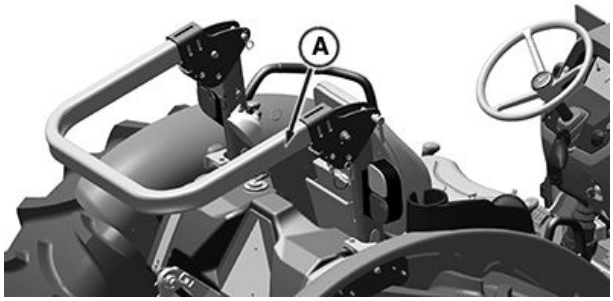

PY39639 —UN—30JAN17

ROPS crossbar

VP27597,0000467 -19-12JUL17-2/2

Keep Cab Protection System Installed Properly

CAUTION: Make certain all parts are installed correctly if cab protection system is loosened or removed for any reason. Tighten mounting cap screws to specification.

The protection offered by cab protection system will be impaired if cab protection system is subjected to structural damage, as in an overturn incident, or is in any way altered by welding, bending, drilling, or cutting. A damaged cab protection system should be replaced, not reused. Any alteration to the cab protection system must be approved by the manufacturer.

When installation of equipment on a machine necessitates loosening or removing cab protection system, mounting cap screws should be tightened to specification

Lift up rubber floor mat and pry out plugs to access FRONT mounting hardware.

Check front and rear mounting hardware (A—C) for proper torque.

	Specification
Cab Protection System Mounting Cap Screws—Torque	350 N•m (258 lb.-ft.)

A—Cap Screw
B—Washer
C—Isolator

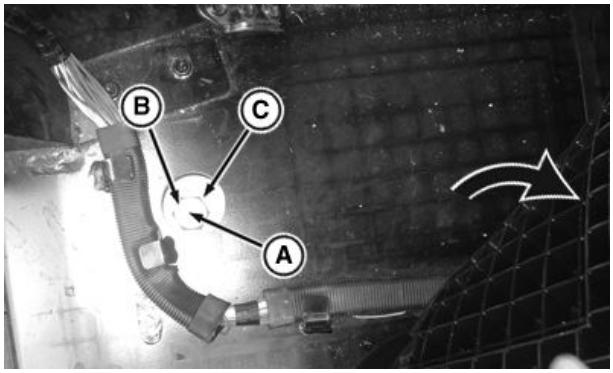

PY16229 —UN—17JUL12

Front Cab Mount (Left-Hand Side)

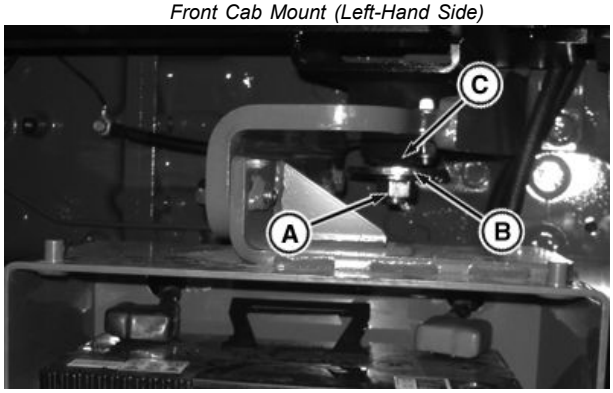

PY16228 —UN—04SEP12

Front Cab Mount (Right-Hand Side)

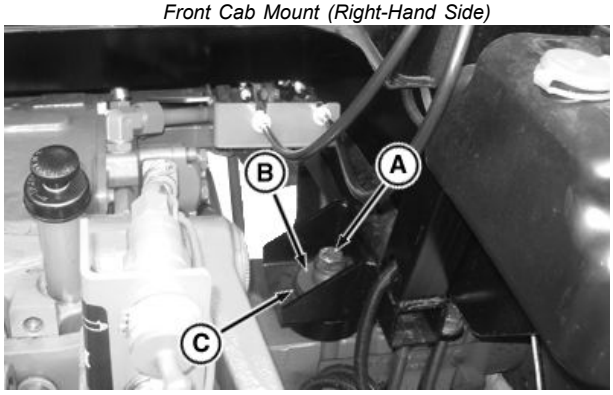

PY16300 —UN—17JUL12

Rear Cab Mount (Right-Hand Side)

VP27597,0000371 -19-23FEB17-1/1

Lubrication

Use Correct Lubricant

IMPORTANT: Use only lubricants meeting specifications outlined in Fuels, Lubricants, and Coolant section when performing tractor service.

SD74272,000025F -19-17MAR20-1/1

Check Engine Oil Level

IMPORTANT: Tractor engine comes from the factory, filled with John Deere Diesel Engine Break-In Plus™ Oil. (See Fuel, Lubricants, and Coolant Section 85 for oil specifications.)

NOTE: Make sure to insert the dipstick all the way in to check oil level.

1. Park tractor on level ground and shut off engine. Remove key.
2. Pull out Engine oil dipstick (A). Oil level should be between two marks on dipstick.
3. If level is low, add oil through the oil filler hole until even with the upper mark. DO NOT overfill. Use seasonal viscosity grade oil. (See Diesel Engine Oil in Section 85 Fuel, Lubricants, and Coolant.)

IMPORTANT: Do not operate engine with the oil level below the low mark on dipstick.

Break-In Plus is a trademark of Deere & Company

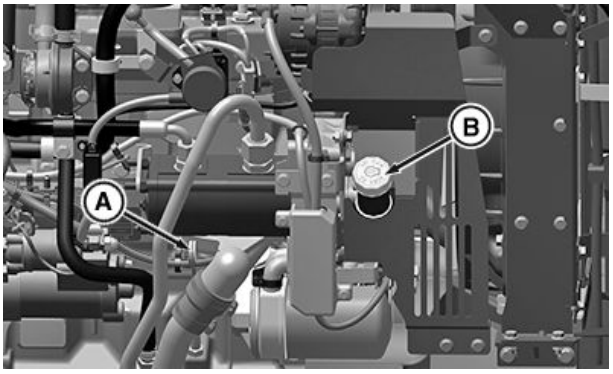

PY39764 —UN—13FEB17

A—Engine Oil Dipstick **B—Engine Oil Filler Cap**

HS35416,0000163 -19-23FEB17-1/1

Change Engine Oil and Filter

SERVICE INTERVAL
Initial — 100 Hours — Engine Oil and Filter
Regular — 500 Hours— Engine Oil, Engine Oil Filter, and Fuel Filter

IMPORTANT: Change engine oil every 125 hours if diesel fuel has a high sulfur content, refer to Diesel Engine Oil in section 85 Fuel, Lubricants, and Coolant.

NOTE: Engine oil and filter should be changed at least once a year.

1. Operate engine to warm oil.
2. Park tractor on level ground and SHUT OFF engine. Remove key.
3. Remove oil drain plug (A) and drain oil.
4. Open hood.
5. Remove engine oil filter (B).

NOTE: Make sure that old filter gasket is removed from housing before installing new filter.

6. Apply a film of oil on the new oil filter gasket and install new filter. Hand-tighten plus 1/2 turn.
7. Install drain plug (A).
8. Add oil to filler (C). (See Diesel Engine Oil in section 85 Fuel, Lubricants, and Coolant.)

Specification

Engine Crankcase Oil—Capacity..... 8.5 L (2.38 gal)

9. Start engine and inspect drain plug (A) and filter (B) for leaks.

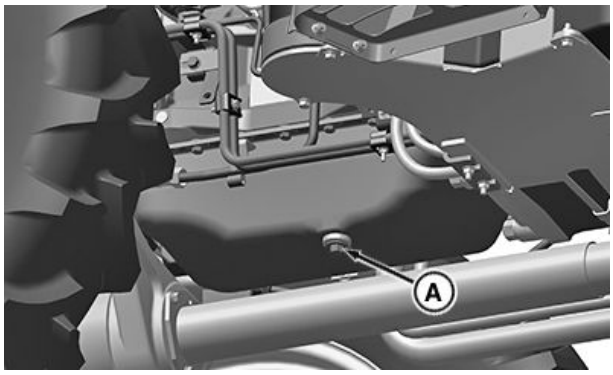

PY39766 —UN—13FEB17

Drain Plug

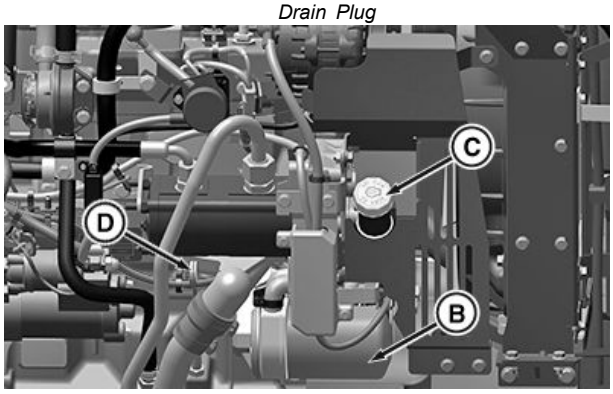

PY39765 —UN—13FEB17

Oil Filter

A—Drain Plug
B—Engine Oil Filter
C—Engine Oil Filler Cap
D—Dipstick

10. Stop engine and remove key.

NOTE: If oil leaks in excess see your John Deere dealer.

11. Recheck oil level, add if necessary.
12. Lower hood.

RP32883,0000A93 -19-02DEC19-1/1

Check Transmission-Hydraulic Oil Level

Service Interval—Every 50 Hours

IMPORTANT: Routine checks will help prevent downtime. The operator can aid in preventive maintenance by documenting all leak and malfunction problems. Since the transmission operates in oil, it is very important to keep oil clean and at the correct level at all times.

1. Operate engine at approximately 1000 rpm for at least one minute.
2. Move rockshaft lever full forward to lower hitch all the way down.
3. Stop engine and wait an additional three minutes before checking oil level.
4. **For SyncShuttle transmission only :**

   Remove dipstick (A) and wipe it clean. Insert dipstick fully. Oil level should be between the full mark and end of dipstick.

   If oil level is below the lower mark, remove filler cap and add oil.
5. **For PowrReverser™ transmission only :**

   Wipe sight glass clean and check oil level. Oil level should be in between the Full mark (B) in upper window and Add mark (C) in lower window.

NOTE: As long as Add mark (C) in lower window is full, there is no requirement of the oil top-up. Full mark (B) in upper window is the full oil level indicator, beyond that oil is not required to be filled.

   Add oil from oil filling port (D) if oil level is low.
6. Install transmission-hydraulic oil filling cap.

A—Transmission-Hydraulic Oil dipstick
B—Full mark/Upper sight glass
C—Add mark/Lower sight glass
D—Transmission-Hydraulic Oil filling port

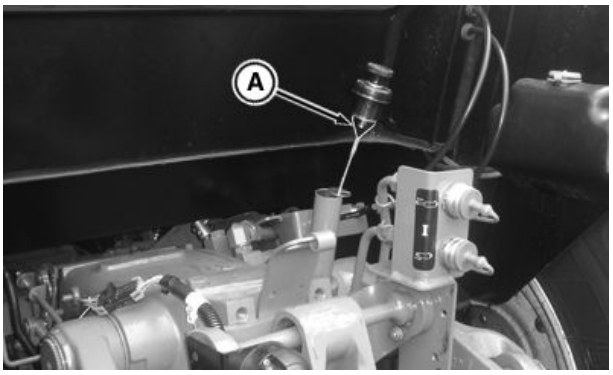

PY16230 —UN—17JUL12

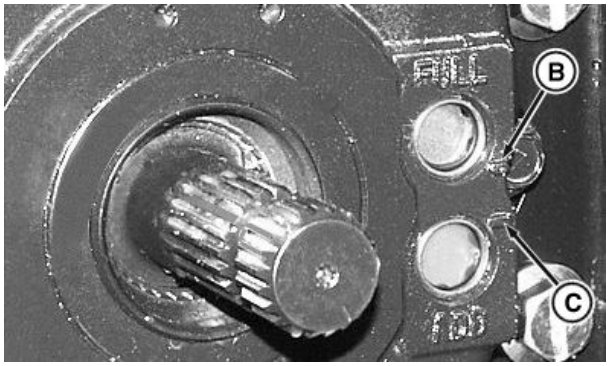

PY17689 —UN—24JAN13

Sight Glass

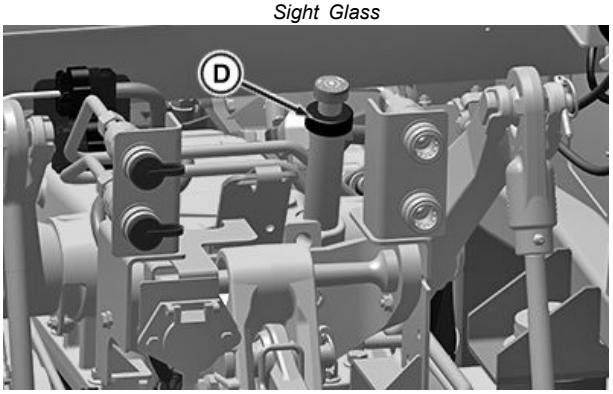

PY39767 —UN—13FEB17

Oil Filling Port

HS35416,0000165 -19-23FEB17-1/1

Change Transmission-Hydraulic Oil and Filter

Service Interval—1200 Hours

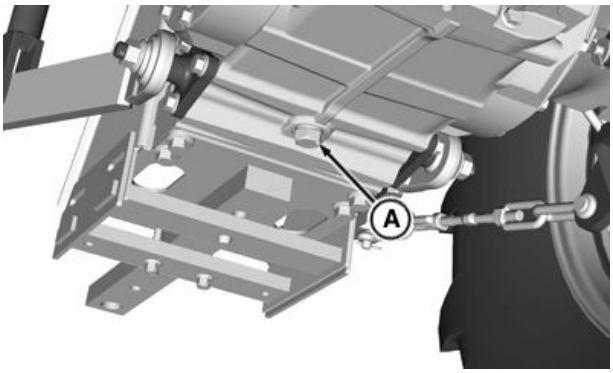

PY16333 —UN—29AUG12

Transmission Drain Plug

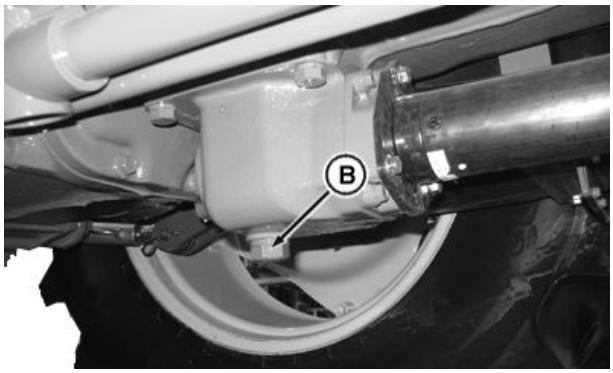

PY16334 —UN—29AUG12

Drop Housing Drain Plug

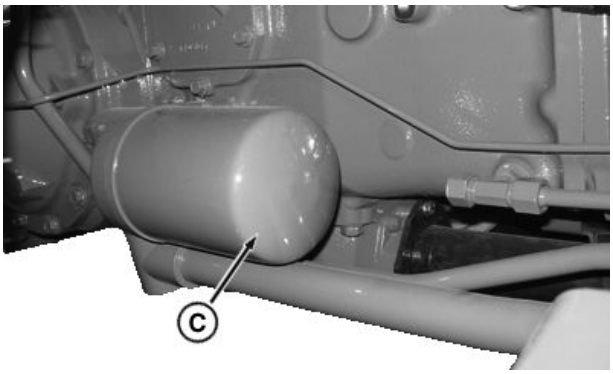

PY16231 —UN—17JUL12

Oil Filter

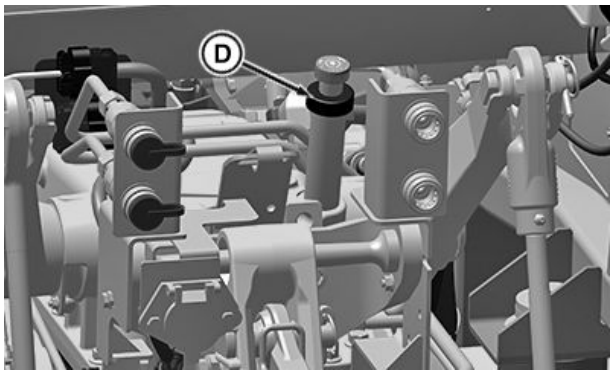

PY39767 —UN—13FEB17

Dipstick

A—Transmission Case Drain Plug
B—MFWD Drop Housing Drain Plug
C—Oil Filter
D—Dipstick

1. Lower rockshaft to remove trapped oil.

NOTE: The approximate oil capacity of transmission case for SyncShuttle is 38 L (10 gal) and for PowrReverser™ is 43.5 L (11.54 gal).

2. Remove drain plug (A) from transmission case and drain out oil. Dispose of waste oil properly.
3. If equipped with the MFWD axle, also remove drain plug (B) in the drop housing.
4. Replace oil filter (C) while changing oil. Apply a film of oil to the new filter gasket and install new filter. Hand tighten only.
5. Fill system with transmission-hydraulic oil. (See Fuels, Lubricants, and Coolant section.)

Specification

SyncShuttle
Transmission Oil
(MFWD)—Capacity..... 38 L (10 gal)
PowrReverser
Transmission Oil
(MFWD)—Capacity..... 43.5 L (11.54 gal)

6. Check oil level at dipstick (D) or sight glass (If equipped) after filling, and again after operating for five minutes.

PowrReverser is a trademark of Deere & Company

HS35416,0000166 -19-23FEB17-1/1

Clean Transmission-Hydraulic Pickup Screen

Service Interval—1200 Hours

1. Drain transmission-hydraulic oil. (See Change Transmission-Hydraulic Oil and Filter in this section.)

NOTE: The approximate oil capacity of transmission case for Sync Shuttle is 38 L (10 gal) and for PowrReverser™ is 43.5 L (11.54 gal).

2. Remove two cap screws (A) and remove screen cover (B).
3. Remove screen and examine it for damage. Replace if necessary. Clean screen in solvent and blow dry with compressed air.
4. Carefully install the screen so the front of screen is inserted in the hole at the front of differential case.
5. Fill system with transmission-hydraulic oil. (See Change Transmission-Hydraulic Oil and Filter in this section.)

A—Cap Screws **B—Screen Cover**

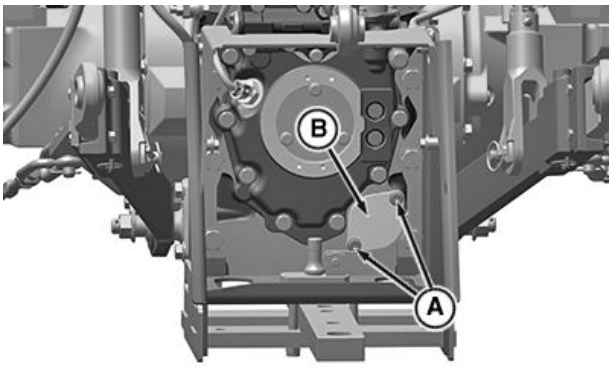

PY39769 —UN—13FEB17

PowrReverser™

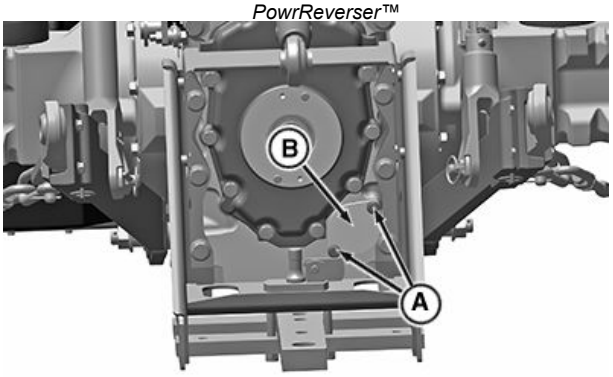

PY39768 —UN—13FEB17

SyncShuttle™

PowrReverser is a trademark of Deere & Company
SyncShuttle is a trademark of Deere & Company

HS35416,0000167 -19-23FEB17-1/2

6. Check oil level at dipstick (D) or at sight glass (If equipped) after filling, and again after operating for five minutes.

D—Transmission - Hydraulic Oil Dipstick

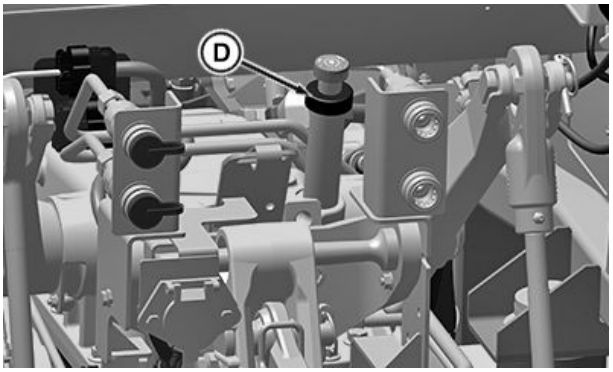

PY39767 —UN—13FEB17

HS35416,0000167 -19-23FEB17-2/2

Lubricate Steering Linkage

Service Interval—Weekly / 50 Hours*
** Daily / 10 Hours if operated in extremely wet or muddy conditions*

2WD Axle (If Equipped)

Apply several shots of grease to steering spindle fittings, on both left and right-hand sides.

A—Spindle Grease Fitting

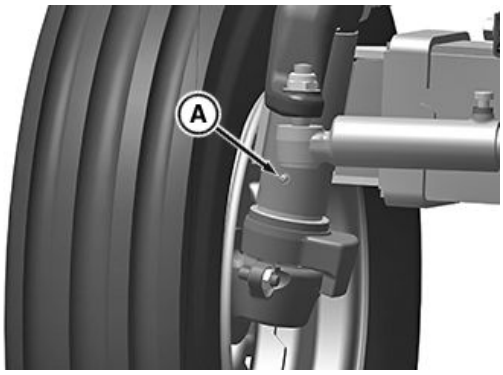

PY39770 —UN—13FEB17

2WD Axle

HS35416,0000168 -19-23FEB17-1/1

Lubricate Front Axle Pivot Pins

Service Interval—Weekly / 50 Hours*
** Daily / 10 Hours if operated in extremely wet or muddy conditions*

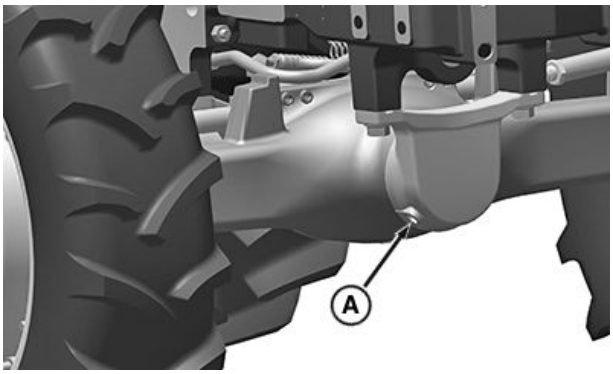

PY39771 —UN—10MAR17

Right Side of MFWD Axle - DANA

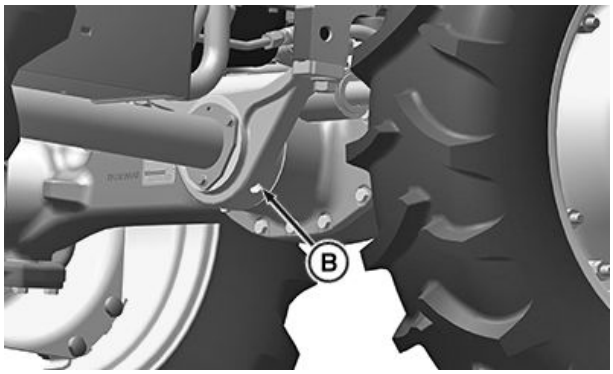

PY39772 —UN—10MAR17

Back Side of MFWD Axle - DANA

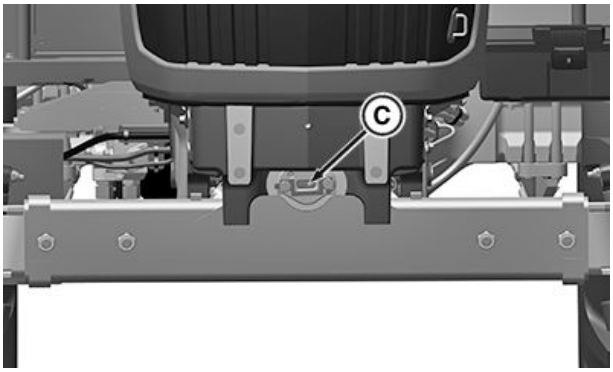

PY39773 —UN—10MAR17

Right Side of 2WD Axle

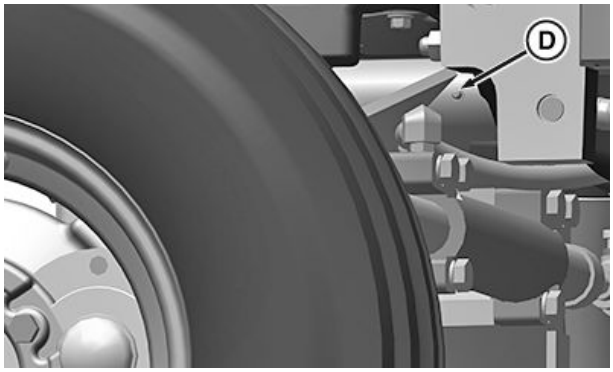

PY39774 —UN—10MAR17

Back Side of Under Front Support

A—MFWD Front Pivot Jerk **B—MFWD Rear Pivot Jerk** **C—2WD Axle Pivot Pin**
D—2WD Rear Pivot Jerk

Lubricate MFWD front pivot (A) and rear pivot (B) with several shots of multipurpose grease. Adjustable axle pivot pin (C) also requires lubrication of the front and rear pivot bushing jerks with multipurpose grease. (See Fuels, Lubricants, and Coolant section.)

HS35416,0000169 -19-23FEB17-1/1

Lubricate Front Axle Greasing Points

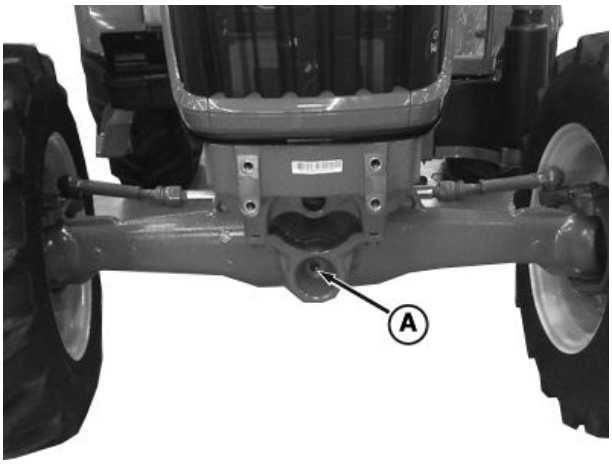

APY10353 —UN—25OCT18

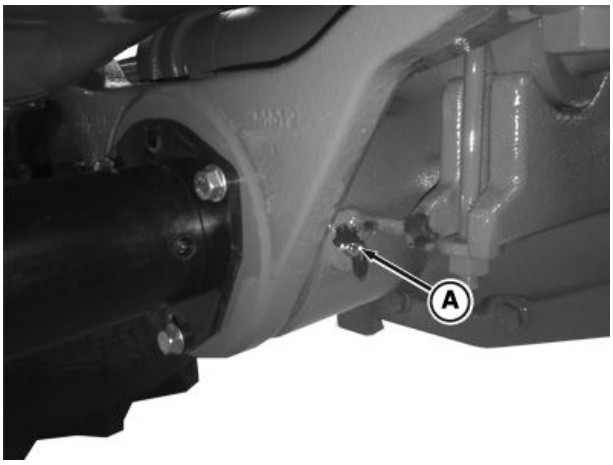

APY10354 —UN—25OCT18

Apply several shots of multi-purpose grease (see Grease, in Section 100) to trunnion.

NOTE: Daily service is necessary when operating in wet and muddy conditions.

Greasing too frequently can cause seal fatigue.

A—Greasing Points

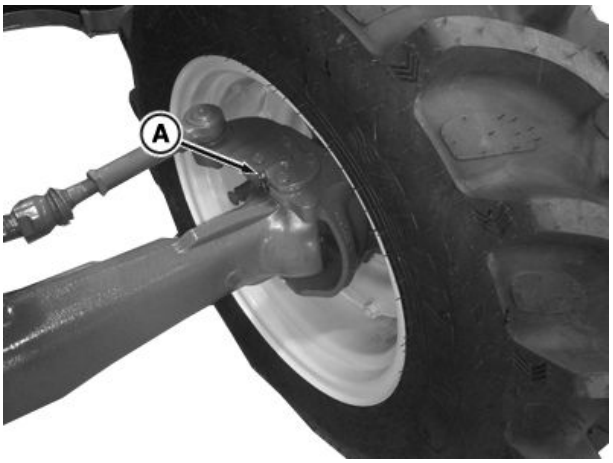

APY10355 —UN—25OCT18

Both Side

VP27597,0000F0C -19-26OCT18-1/1

Lubricate Hitch Components

Lubricate right lift link (A) and left lift link (B) with several shots of multipurpose grease. (See Fuels, Lubricants and Coolant section.)

Service Interval—250 Hours

A—Right Lift Link **B—Left Lift Link**

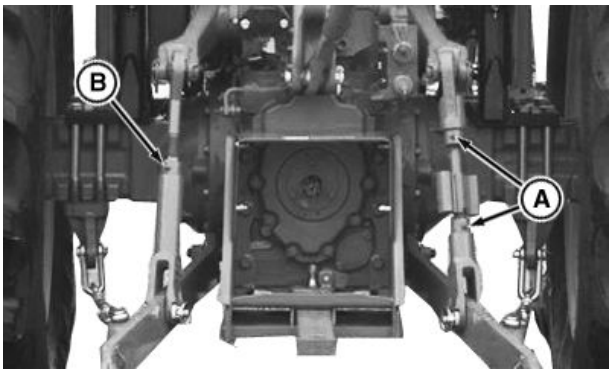

PY16235 —UN—18DEC12

SD74272,0000268 -19-17JUL12-1/1

Check MFWD Axle Wheel Hub Oil Level

Service Interval—50 Hours

1. Park tractor on level surface.
2. Turn wheel hubs until the words OIL LEVEL are horizontal.
3. Remove plug (A). Oil level should be just below plug hole.
4. If low, add oil through same hole. Add John Deere Hy-Gard™ or its equivalent.(See Fuels, Lubricants and Coolant section.)
5. Apply pipe sealant with TEFLON®, or equivalent, to threads of plug.
6. Install plug and tighten to specifications.

Specification

Plug-to-Hub—Torque.....70 N·m (52 lb-ft)

Hy-Gard is a trademark of Deere & Company
TEFLON is a trademark of Du Pont Co.

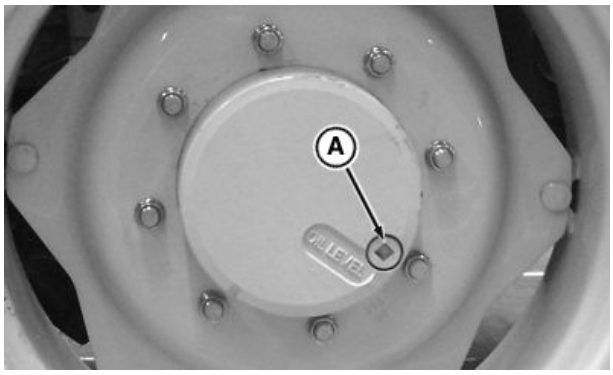

PY16236 —UN—17JUL12

A—Plug

7. Repeat procedure on opposite wheel hub.

HS35416,000016A -19-20FEB17-1/1

Change MFWD Axle Wheel Hub Oil

Service Interval

Regular—600 Hours

NOTE: Approximate wheel hub oil level is 0.8 L (0.21 gal) each.

1. Park tractor on level surface.
2. Rotate wheel until drain/fill port plug (A) is at bottom of hub.
3. Remove plug and drain oil.
4. After oil has drained, rotate wheel until drain/fill port is positioned horizontally.
5. Add oil until level is just below edge of hole. John Deere Hy-Gard™ Transmission/Hydraulic Oil is recommended. (See Fuels, Lubricants and Coolant section.)
6. Apply pipe sealant with TEFLON®, or equivalent, to threads of plug.
7. Install plug and tighten to specifications.

Hy-Gard is a trademark of Deere & Company
TEFLON is a trademark of Du Pont Co.

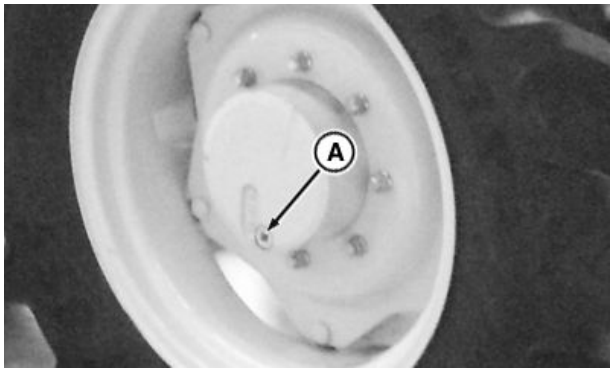

PY16237 —UN—17JUL12

A—Drain/Fill Port Plug

Specification

Plug-to-Hub—Torque.....70 N·m (52 lb-ft)

8. Repeat procedure on opposite wheel hub.

SD74272,000026A -19-26SEP13-1/1

Check MFWD Axle Housing Oil Level

Service Interval—50 Hours

1. Park tractor on the level surface.
2. Remove plug (A). Oil level should be approximately 12 mm (1/2 in.) below the edge of the plug hole.
3. If low, add oil through the same hole. John Deere Hy-Gard™ oil is recommended. (See Fuels, Lubricants, and Coolant section.)

NOTE: Approximate MFWD axle housing oil capacity is 4.5 L (1.19 gal).

4. Apply pipe sealant with TEFLON®, or equivalent, to threads of plug.
5. Install plug and tighten to specifications.

Specification

Plug-to-Axle Housing—Torque.....70 N·m (52 lb-ft)

Hy-Gard is a trademark of Deere & Company
TEFLON is a trademark of Du Pont Co.

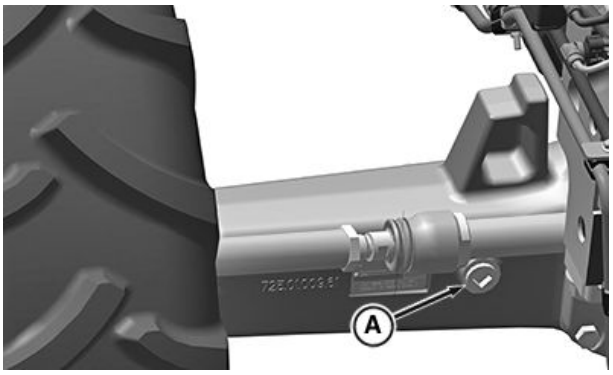

PY39775 —UN—13FEB17

A—Plug

HS35416,000016B -19-23FEB17-1/1

Change MFWD Axle Housing Oil

Service Interval

Regular—600 Hours

NOTE: Approximate MFWD axle housing oil capacity is 4.5 L (1.19 gal).

1. Park tractor on level surface.
2. Remove plugs (A and B).
3. After oil has drained, apply pipe sealant with TEFLON®, or equivalent, to threads of plug (B).
4. Install plug and tighten to specifications.
5. Add oil until approximately 12 mm (1/2 in.) below edge of plug port (A). John Deere Hy-Gard™ Transmission/Hydraulic Oil is recommended. (See Fuels, Lubricants and Coolant section.)
6. Install plug and tighten to specifications.

Specification

Plugs-to-Axle Housing—Torque.....70 N·m (52 lb-ft)

TEFLON is a trademark of Du Pont Co.
Hy-Gard is a trademark of Deere & Company

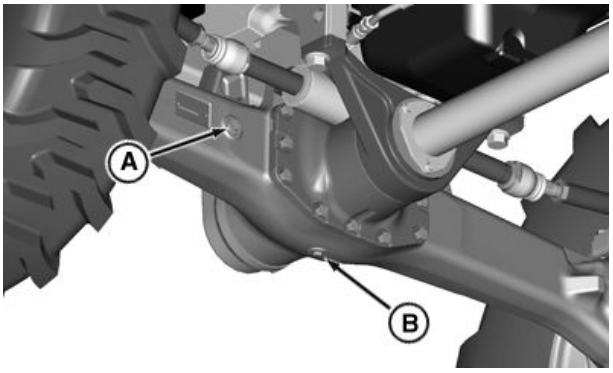

PY16238 —UN—17JUL12

A—Inspection/Fill Plug **B—Drain Plug**

IMPORTANT: To avoid damage to internal axle components, check oil level after 30 minutes.

7. After approximately 30 minutes of operation, recheck oil level. (See procedure in this section.)

SD74272,000026C -19-26SEP13-1/1

Pack Front Wheel Bearing, 2WD (If Equipped)

Service Interval—500 Hours

1. Loosen front wheel cap screw.
2. Raise front end of tractor.

CAUTION: Support tractor securely on stands before removing a wheel.

3. Remove wheel.
4. Remove cover (A), cotter pin (C) and nut (B) to remove wheel hub (E).
5. Pack inner bearing (F) and outer bearing (D) with multipurpose grease. (See Fuels, Lubricants and Coolant section.)
6. Install hub assembly and retaining nut. Tighten nut until a slight drag is felt while turning hub. Back off nut just enough to install cotter pin in hole of spindle.
7. Apply flexible sealant to mating surface of cover (A) and hub (E). Install cover.
8. Install hub cap and wheels. Tighten lug bolts to specification. Tighten bolts again after driving tractor 100 m (109 yd) and again after three hours and 10 hours use.

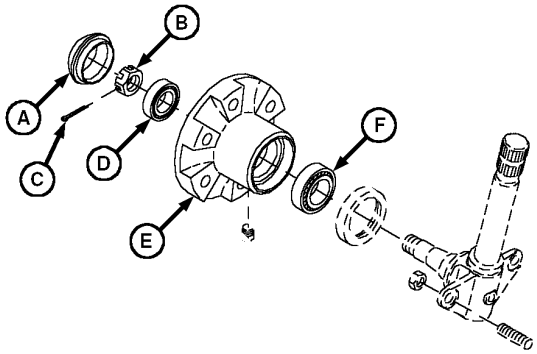

LV8746 —UN—17OCT03

A—Cover
B—Retaining Nut
C—Cotter Pin
D—Outer Bearing
E—Wheel Hub
F—Inner Bearing

Specification

Adjustable Front Axle Lug Bolts—Torque ..... 175 N·m (130 lb-ft)

SD74272,00004D5 -19-14MAR13-1/1

Lubricate Rear Axle Bearings

Lubricate rear axle fittings (A), both sides, with several shots of multi-purpose grease. (See Fuels, Lubricants, and Coolant section.)

Service Interval—600 Hours*
** Weekly / 10 Hours if operated in extremely wet or muddy conditions*

A—Rear Axle Fittings

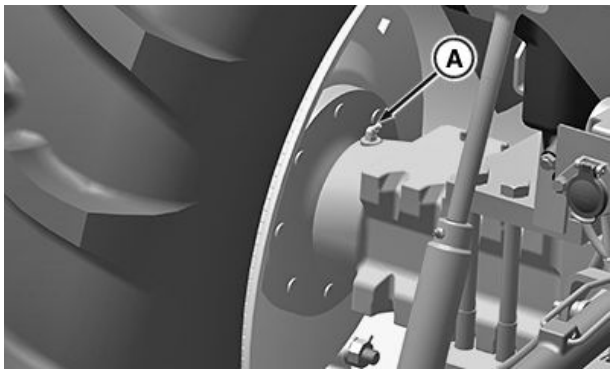

PY39776 —UN—13FEB17

Left-Hand Side Shown

HS35416,000016C -19-23FEB17-1/1

Lubricate Operator's Seat Slide Rails (OOS)

NOTE: This procedure is only necessary after pressure washing.

Move seat full forward and apply multipurpose grease to slide rails.

PY39777 —UN—13FEB17

HS35416,000016D -19-23FEB17-1/1

Lubricate Hood Latch

NOTE: This procedure is only necessary after pressure washing.

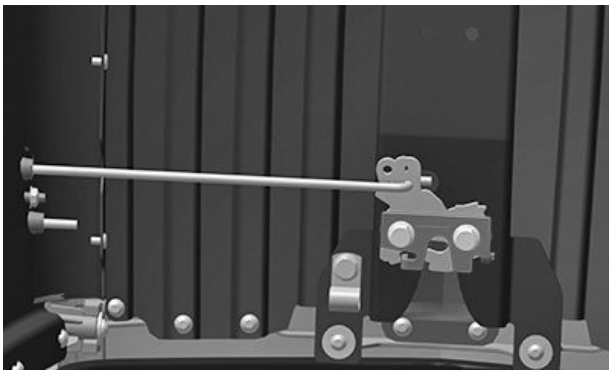

PY39778 —UN—13FEB17

HS35416,000016E -19-23FEB17-1/1

Clean Grille, Screen Assembly, Intercooler, Fuel Cooler, Oil Cooler and Radiator — OOS

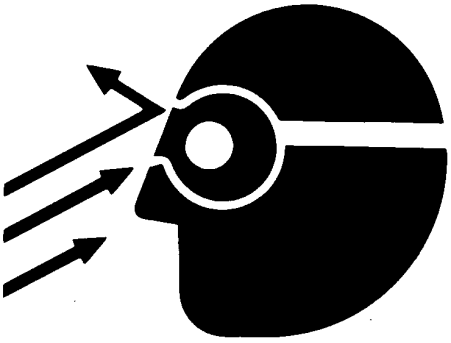

TS266 —UN—23AUG88

PY39818 —UN—07FEB17

Screen (OOS)

A—Screen

1. Whenever dirt builds up on front screen (A), stop engine and brush clean.

CAUTION: Reduce compressed air to less than 210 kPa (2 bar) (30 psi) when using for cleaning purposes. Clear area of bystanders, guard against flying chips, and wear personal protection equipment including eye protection.

HY01057,00000F5 -19-04JUL17-1/3

2. Pull hood latch release (A), and unlock the hood.
3. Raise hood. The cylinders will help raise the hood and keep it in this position once it is completely up.

A— Hood Latch Release

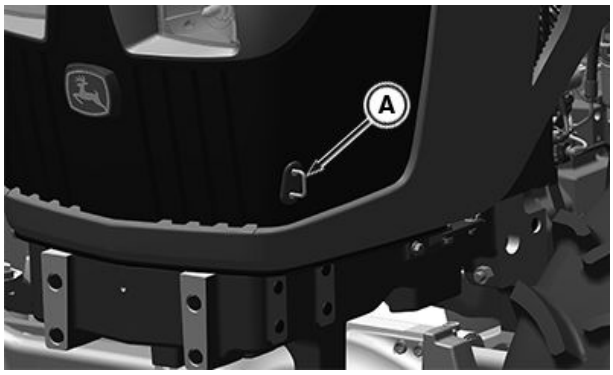

PY41757 —UN—04JUL17

Continued on next page

HY01057,00000F5 -19-04JUL17-2/3

4. Remove screen (A) as shown direction.
5. Clean intercooler (B), fuel cooler (C), oil cooler (D) and radiator (E) at the installed condition.
6. If more cleaning is necessary, clean radiator from behind with compressed air or water. Straighten any bent fins.
7. Clean screen (A) and install.

A—Radiator Screen
B— Intercooler
C— Fuel Cooler
D— Oil Cooler
E— Radiator

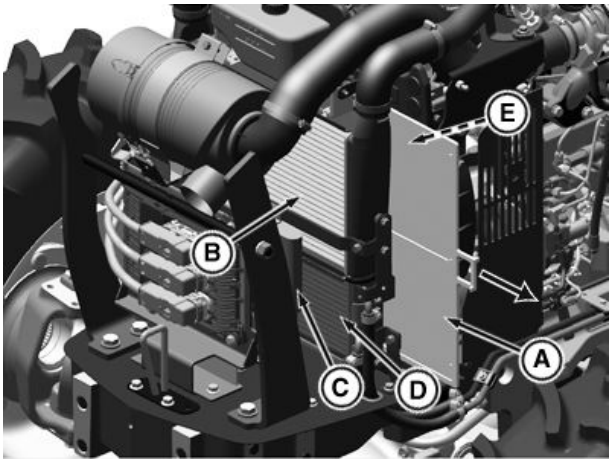

PY39819 —UN—07FEB17

Cooling System, OOS

HY01057,00000F5 -19-04JUL17-3/3

Clean Grille, Fuel Cooler, Vapor Condenser, Oil Cooler, Intercooler and Radiator — Cab

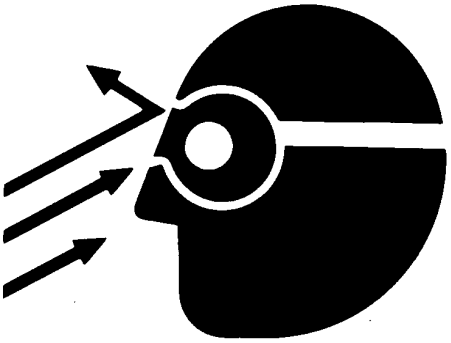

TS266 —UN—23AUG88

PY39818 —UN—07FEB17

A—Screen

1. Whenever dirt builds up on front screen (A), stop engine and brush clean.

CAUTION: Reduce compressed air to less than 210 kPa (2 bar) (30 psi) when using for cleaning purposes. Clear area of bystanders, guard against flying chips, and wear personal protection equipment including eye protection.

Continued on next page

HY01057,00000F6 -19-04JUL17-1/3

2. Pull the hood latch release (A) and unlock the hood.
3. Raise hood. The cylinders will help raise the hood and keep it in this position once it is completely up.

A— Hood Latch Release

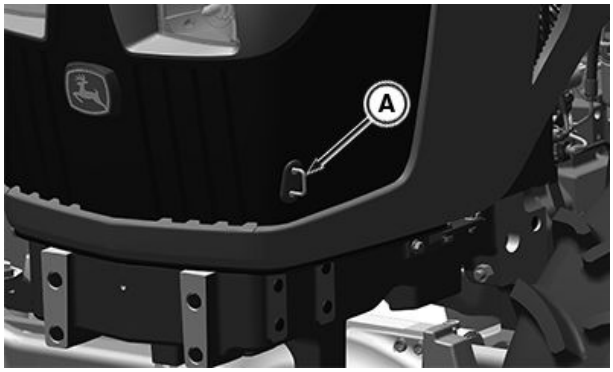

PY41757 —UN—04JUL17

HY01057,00000F6 -19-04JUL17-2/3

4. Remove screens (A and B) as shown direction.
5. Clean fuel cooler (C), vapor condenser (D), oil cooler (E), intercooler (F) and radiator (G) at the installed condition.
6. If more cleaning is necessary, clean radiator from behind with compressed air or water. Straighten any bent fins.
7. Clean screens (A and B) and install.

A—CAC Screen
B—Radiator Screen
C—Fuel Cooler
D—Vapor Condenser
E—Oil Cooler
F—Intercooler
G—Radiator

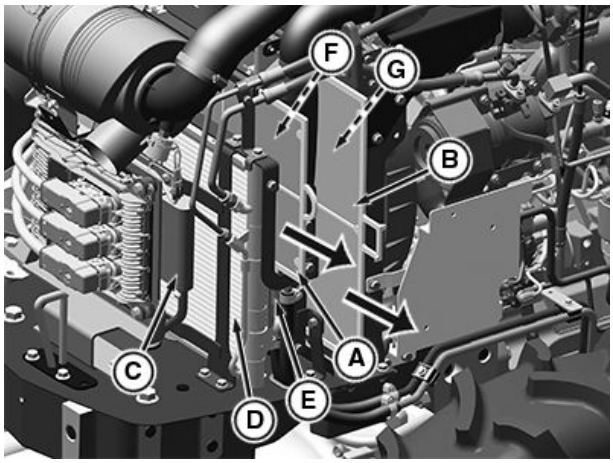

Cooling System, Cab

PY39820 —UN—04JUL17

HY01057,00000F6 -19-04JUL17-3/3

Check Coolant Level

Service Interval—Daily / 10 Hours

CAUTION: Explosive release of fluids from pressurized cooling system can cause serious burns.

Shut off engine. Only remove cap when cool enough to touch with bare hands. Slowly loosen cap to first stop to relieve pressure before removing completely.

Never pour cold water into the cooling system of a hot engine, as it might crack cylinder block or head. Do not operate engine without coolant for even a few minutes.

1. Raise hood.

NOTE: Coolant level should be checked when engine is COOL.

2. Check level in coolant reservoir (A) BEFORE starting tractor.
3. If engine is COOL and level is below **MIN COLD** mark, remove cap and add coolant to reservoir to bring level between **MIN** and **MAX COLD** mark.
4. Install cap and lower hood.

A—Coolant Reservoir

Safety—Explosive Release of Fluids

TS281 —UN—15APR13

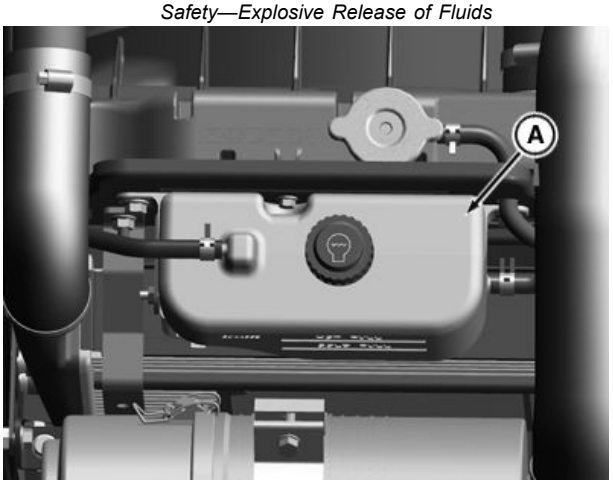

Coolant Overflow Reservoir

PY39821 —UN—07FEB17

HY01057,00000F7 -19-08FEB17-1/1

Check Cooling System for Leaks

Service Interval—600 Hours

1. Check around base of radiator (A) for pinholes, cracks or any sign of coolant leakage.
2. Inspect coolant reservoir (B) for holes, cracks or any sign of coolant leakage.

A—Radiator **B—Coolant Reservoir**

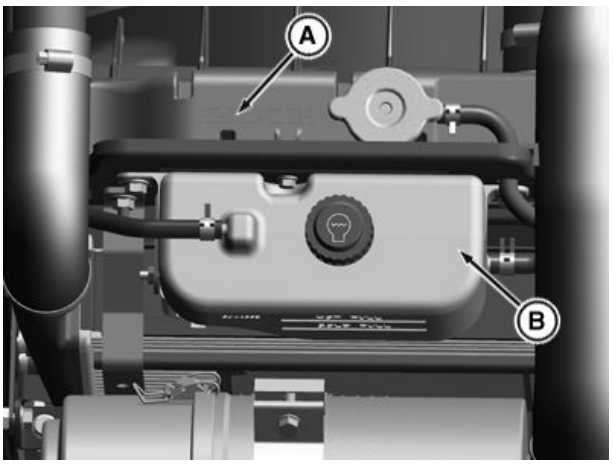

Cooling Reservoir

PY39822 —UN—07FEB17

Continued on next page

HY01057,00000F8 -19-08FEB17-1/2

3. Inspect area around thermostat housing (C) for cracks, or any sign of coolant leakage.

C—Thermostat Housing

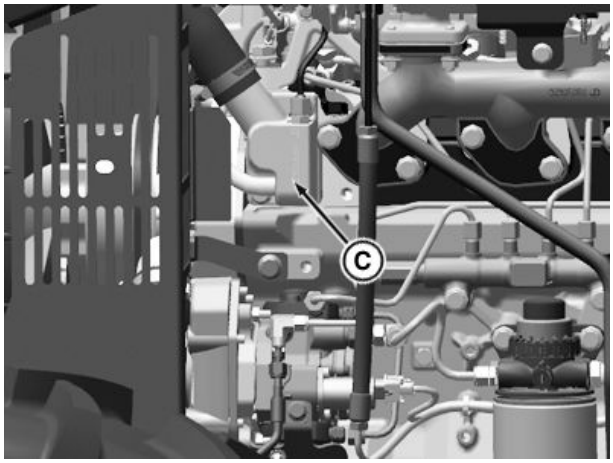

PY39823 —UN—07FEB17

Thermostat

HY01057,00000F8 -19-08FEB17-2/2

Flush Cooling System and Replace Thermostat

Service Interval —2000 Hours / 2 Years*

**** 6000 hours / 6 Years :*** if John Deere Cool-Gard™ II is used.

Cool-Gard is a trademark of Deere & Company

Have your John Deere dealer drain old coolant, flush the entire system, install new thermostat and fill with clean coolant.

HY01057,00000F9 -19-07FEB17-1/1

Flush Cooling System

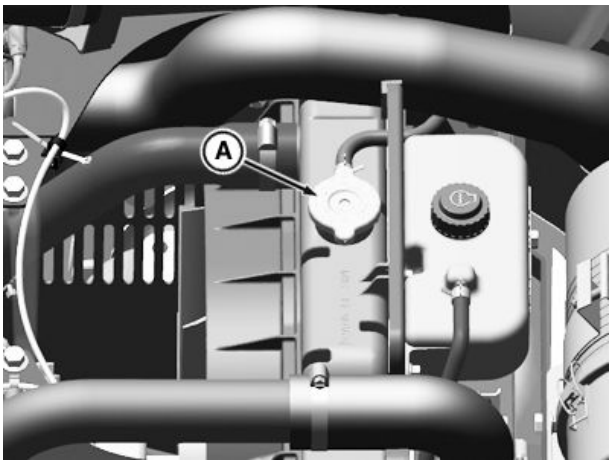

PY39824 —UN—07FEB17

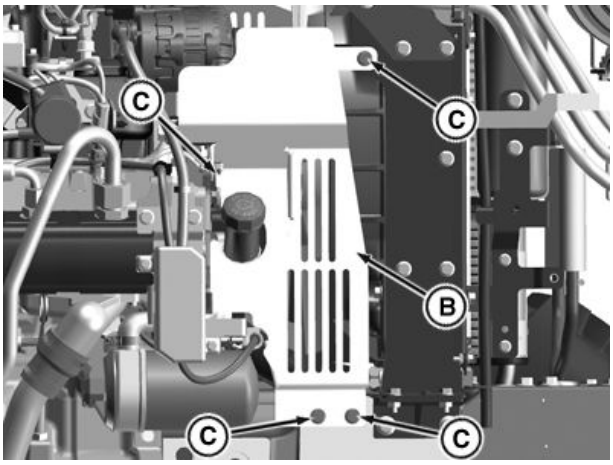

PY39825 —UN—07FEB17

Guard

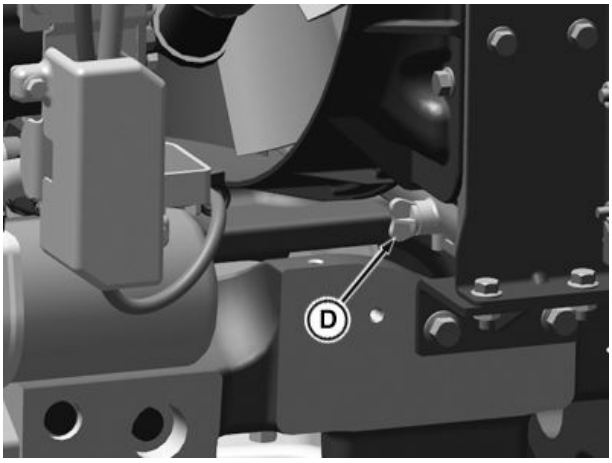

PY39826 —UN—07FEB17

Drain Plug

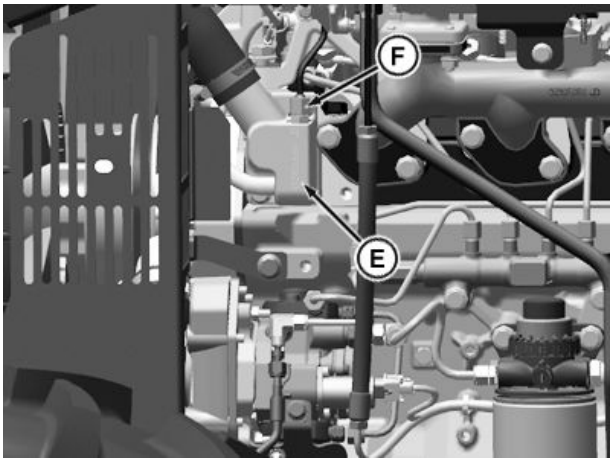

PY39827 —UN—07FEB17

Cold Start Aid Switch

A— Radiator Cap
B— Guard
C— Screws
D— Drain Plug
E— Thermostat Cover
F— Cold Start Aid Switch

For efficient operation, drain old coolant, flush the entire system, and fill with clean coolant at least once every two years.

1. Remove guard (B) by loosening screws (C).

CAUTION: DO NOT remove radiator cap or drain coolant until coolant is cold (temperature gauge should be below the green striped zone). Always loosen radiator cap or drain valve slowly to relieve any excess pressure.

2. Drain coolant - Remove radiator cap (A). Open drain plug (D) on radiator and drain coolant from radiator. Drain coolant from engine block.

IMPORTANT: Thermostat must be removed to ensure a thorough flush.

3. Remove thermostat cover (E), remove thermostat, and install cover (without thermostat). Tighten cap screws to specification.

Specification

Thermostat Cover Cap Screws—Torque..... 47 N·m (35 lb-ft)

4. Flush system with water - Close all drain valves/plugs and fill system with clean water. Run engine about 10 minutes to stir up possible rust or sediment. Stop engine and drain water from system before rust and sediment settle.

5. Flush system with radiator cleaner - Close all drain valve/plugs, reinstall cold start aid switch (F) and fill the cooling system with a good commercial radiator cleaner and water. Follow instructions provided with cleaner. Stop engine and immediately drain system.

Continued on next page

HY01057,00000FA -19-08FEB17-1/4

6. Flush system with water - Close all drain valves/plugs, reinstall cold start aid switch (F) and fill with clean water to flush the system. Run the engine about 10 minutes, then drain out flushing water.

HY01057,00000FA -19-08FEB17-2/4

7. Remove thermostat cover (E) and clean off the gasket material. Apply gasket sealant to new gasket and install thermostat and cover. Tighten cap screws to specification.

Specification

Thermostat Cover Cap Screws—Torque..... 47 N·m (35 lb-ft)

8. Fill with fresh coolant - Close all drain valves/plugs and fill with coolant as specified in the Fuels, Lubricants, and Coolant section.
9. Check coolant level - Fill radiator to the top of the filler neck and fill the recovery tank to the “LOW” mark. Run the engine until operating temperature is reached. Let the engine cool (preferably overnight) and recheck the coolant level. Coolant level with a cold engine should be at the “LOW” mark. An engine at operating temperature should have a coolant level at the “FULL” mark. When filling the cooling system it may require several operating/cooling periods to stabilize the coolant level in the system. Add make-up coolant to the recovery tank as needed to bring the coolant level to the correct mark.

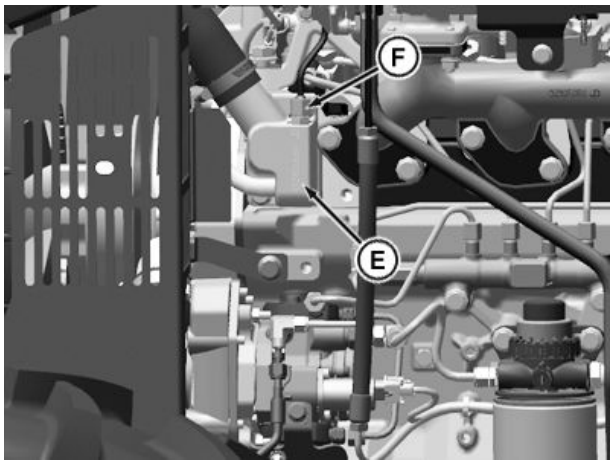

PY39827 —UN—07FEB17

Thermostat Cover

E— Thermostat Cover **F— Cold Start Aid Switch**

HY01057,00000FA -19-08FEB17-3/4

10. Install guard (A) using screws (B).

A— Guard **B— Screws**

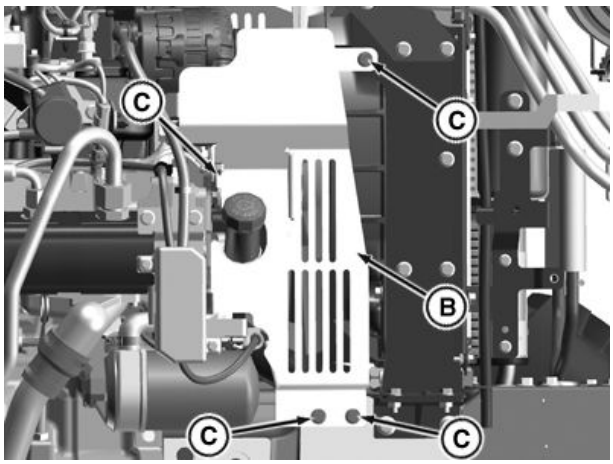

PY39825 —UN—07FEB17

HY01057,00000FA -19-08FEB17-4/4

Winterize Cooling System

IMPORTANT: Draining cooling system WILL NOT protect against freezing if antifreeze is weak, since system does not get drain completely.

1. Prior to cold weather, be sure that cooling system contains 50 to 67 percent antifreeze. (See **Testing Coolant Freeze Point** in Fuels, Lubricants, and Coolant section.)
2. After adding antifreeze, run engine until it reaches operating temperature. This mixes solution uniformly and circulates it through the entire system.

HY01057,00000FB -19-07FEB17-1/1

Do Not Modify Fuel System

CAUTION: Escaping fluid under pressure can penetrate the skin, causing serious injury. Avoid the hazard by relieving system pressure before disconnecting pressurized lines. Search for leaks with a piece of cardboard. Protect hands and body from high pressure fluids.

If an accident occurs, see a doctor immediately. Any fluid injected into the skin must be surgically removed within a few hours or gangrene may result. Doctors unfamiliar with this type of injury should reference a knowledgeable medical source. Such information is available from Deere & Company Medical Department in Moline, Illinois, U.S.A.

IMPORTANT: Use only Fuel outlined in "Fuels, Lubricants and Coolant" section.

Modification or alteration of the injection pump, the injection pump timing, or the fuel injectors in ways not recommended by the manufacturer will terminate the warranty obligation to the purchaser. (See warranty information inside front cover.)

Do not attempt to service injection pump or fuel injectors yourself. Special training and special tools are required. (See your John Deere dealer.)

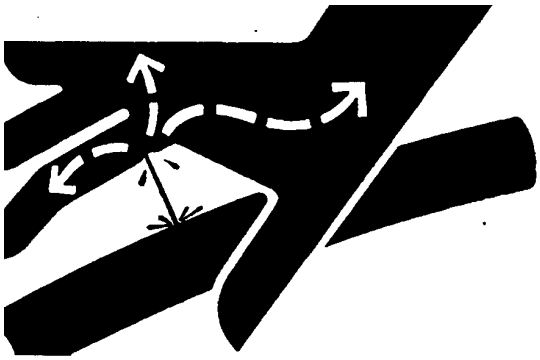

X9811 —UN—23AUG88

SD74272,0000275 -19-17JUL12-1/1

Drain Water and Sediment from Fuel Filters

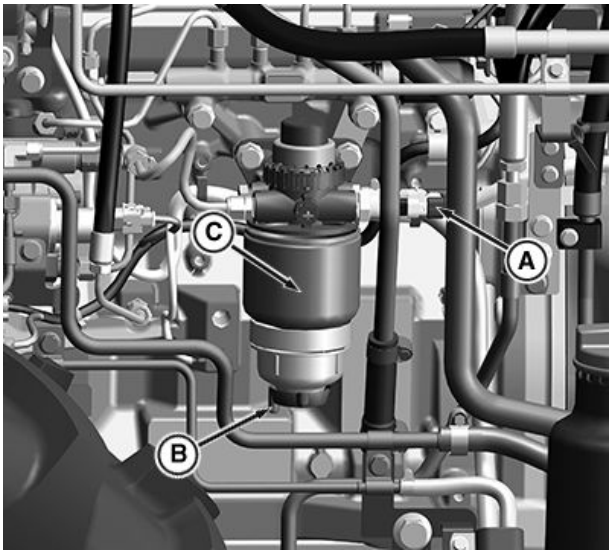

PY39694 —UN—09FEB17

Left-Hand Side of Engine - Cab Tractors

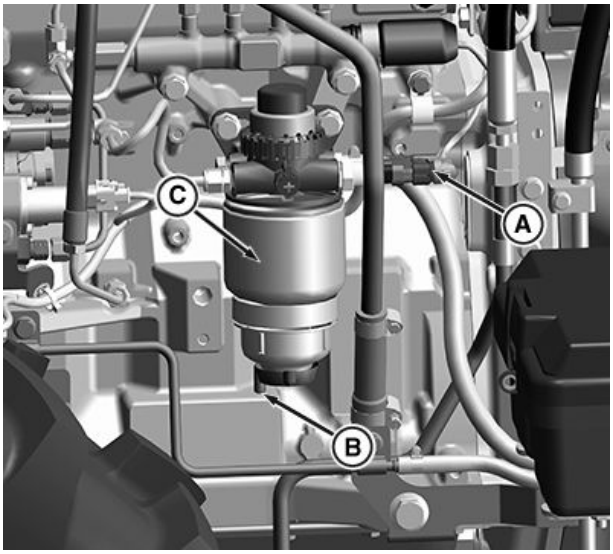

PY39696 —UN—09FEB17

Left-Hand Side of Engine - OOS Tractors

A—Wiring Harness Connector
B—Drain Plug
C—Fuel Filter

Service Interval—Daily / 10 Hrs

NOTE: Place a small container under the drain fitting to collect the draining fuel. Dispose of waste properly.

1. Disconnect wiring harness connector (A).
2. Connect a small hose to end of the drain plug (B).
3. Place a suitable container under drain.
4. Open drain plug (B) to drain moisture and sediment from the fuel filter (C).
5. Tighten drain plug (B) when fuel runs clear.
6. Remove drain hose and connect wiring harness connector (A).

VP27597,0000349 -19-09FEB17-1/1

Drain Water and Sediment from Fuel Tank (OOS)

Service Interval— Daily / 10 Hrs

1. Remove filler cap (A).
2. Place suitable container under the drain plug (C) covering area.
3. Loosen the screw (B) and drain plug (C) to drain moisture and sediment from the fuel tank.
4. Tighten drain plug (C) and Screw (B) when fuel runs clear.
5. Inspect and thoroughly clean all filler cap vents.
6. Inspect rubber seal for cracks or other imperfections. Replace if necessary
7. Install filler cap (A).

A—Filler Cap
B—Screw
C—Drain Plug

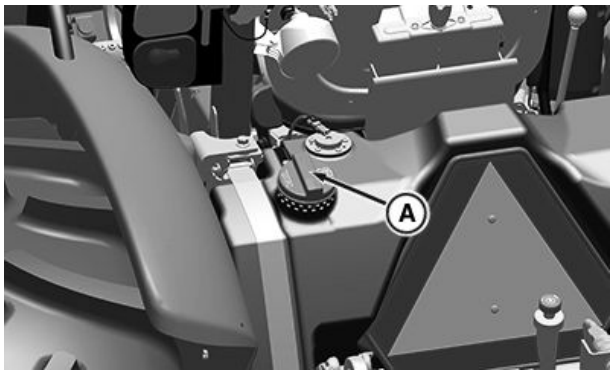

PY38042 —UN—09FEB17

For OOS Tractors

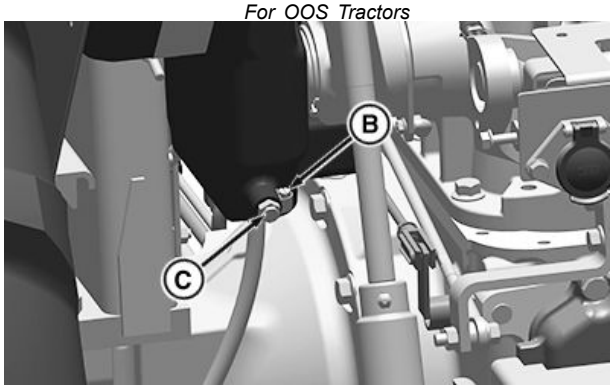

PY38044 —UN—09FEB17

Drain Plug OOS Tractors

VP27597,000034E -19-09FEB17-1/1

Drain Water and Sediment from Fuel Tank (CAB)

Service Interval— Daily / 10 Hrs

1. Remove filler cap (A).
2. Place suitable container under the drain plug (C) covering area.
3. Loosen the screw (B) and drain plug (C) to drain moisture and sediment from the fuel tank.
4. Tighten drain plug (C) and Screw (B) when fuel runs clear.
5. Inspect and thoroughly clean all filler cap vents.
6. Inspect rubber seal for cracks or other imperfections. Replace if necessary
7. Install filler cap (A).

A—Filler Cap
B—Screw
C—Drain Plug

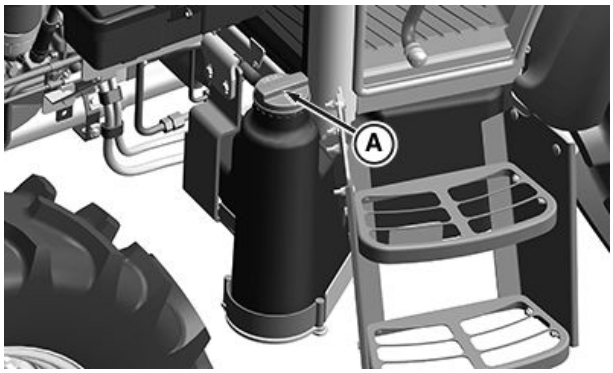

PY38041 —UN—09FEB17

For Cab Tractors

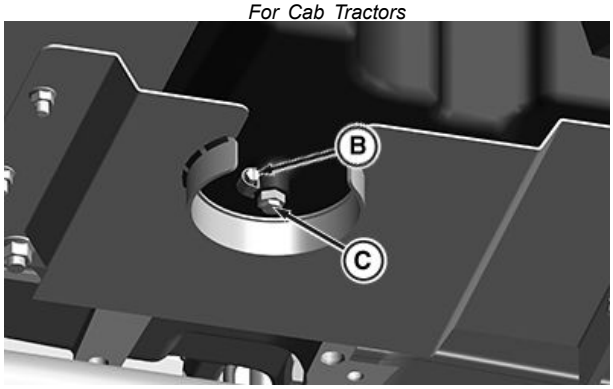

PY38043 —UN—09FEB17

Drain Plug OOS Tractors

VP27597,000034F -19-09FEB17-1/1

Replace Fuel Filter / Water Separator

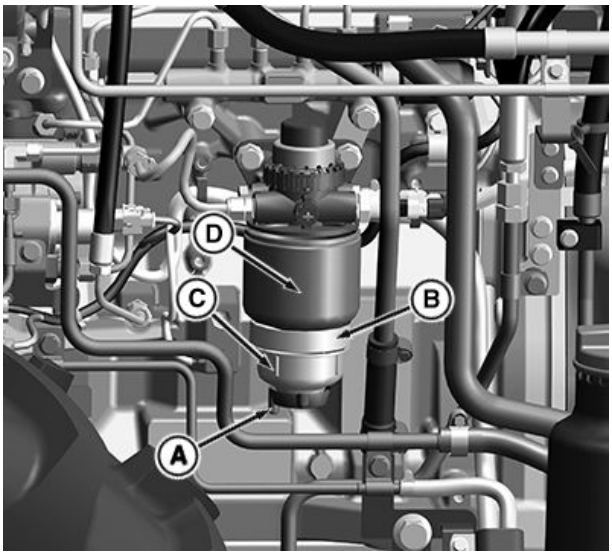

PY39695 —UN—09FEB17

Primary Fuel Filter Cab - Tractors

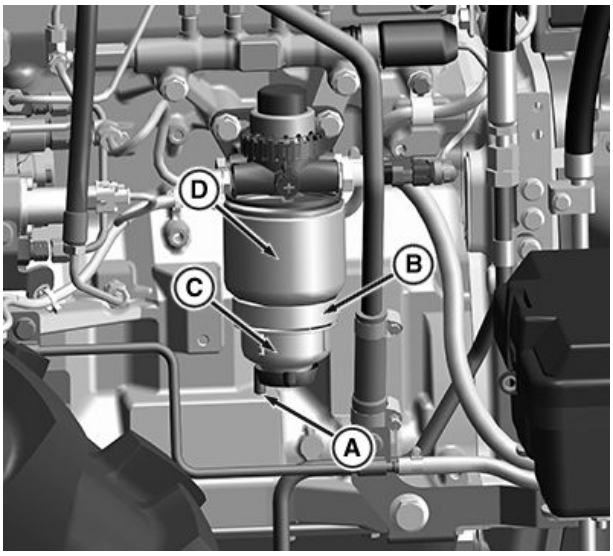

PY39697 —UN—09FEB17

Primary Fuel Filter OOS - Tractors

A—Drain Port
B—Bottom Retaining Ring
C—Water Separator Bowl
D—Fuel Filter

Service Interval—500 Hrs

1. Connect a drain line to drain port (A) and place a suitable container under drain.
2. Loosen drain and drain fuel from filter.
3. Loosen bottom retaining ring (B). Remove water separator bowl (C). Disconnect wiring harness.
4. Remove fuel filter (D) and filter seal.
5. Discard old filter. Inspect filter seal for cracks, breaks, or other signs of leaking. Replace as necessary.
6. Clean and dry water separator bowl (C).
7. Install water separator bowl on the new primary fuel filter. Tighten retaining ring (B) until it snaps into place. Do not overtighten.
8. Install new primary fuel filter and filter seal to machine. Tighten retaining ring (D) until it snaps into place. Do not overtighten.
9. Connect wiring harness.
10. Bleed fuel system. (See procedure in this section.)

VP27597,0000348 -19-09FEB17-1/1

Bleed Fuel System

IMPORTANT: Any time the fuel system has been opened up for service (lines disconnected or filters removed), it is necessary to bleed air from the system.

NOTE: A second person is needed for the following procedure.

The fuel system can be bled at two locations:
- Final Fuel Filter
- Fuel Injection Pump

Final Fuel Filter

1. Open bleed vent screw (A).
2. Take the help from the second person for pump the hand primer (B) until fuel runs out smoothly without spiting.
3. When no air bubbles are seen close vent screw.
4. Pump the hand primer until resistance is felt.
5. Repeat until no air bubbles flow from vent screw. Then tighten the bleed screw (A).

A—Bleed Vent Screw **B—Hand Primer**

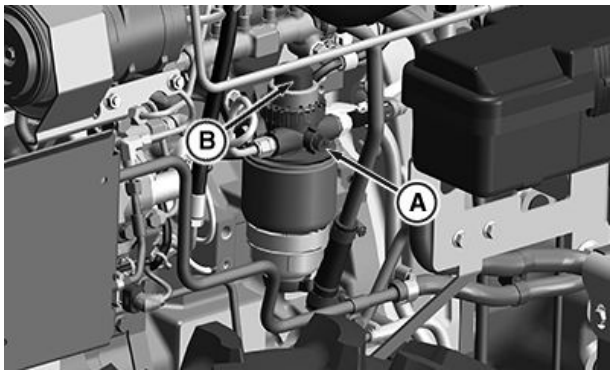

Left-hand Side Cab - Tractors

PY38045 —UN—09FEB17

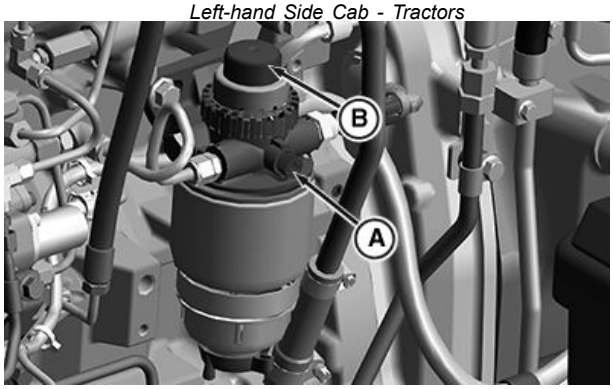

Left-hand Side OOS - Tractors

PY38040 —UN—09FEB17

VP27597,0000347 -19-09FEB17-1/2

Fuel Injection Pump

1. Loosen fuel return line (A) at the fuel injection pump.
2. Take the help from the second person for pump the hand primer (B).
3. When no air bubbles are seen tighten fuel return line.
4. Pump the hand primer until resistance is felt.
5. Repeat until no air bubbles flow from the fuel return line. Then tighten fuel return line (A).

Specification	
Fuel Return Line—Torque	27 N·m (20 lb·ft)

A—Fuel Return Line **B—Hand Primer**

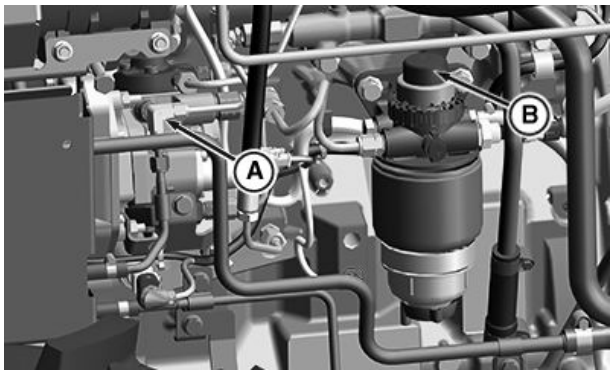

Left-hand Side Cab - Tractors

PY39698 —UN—09FEB17

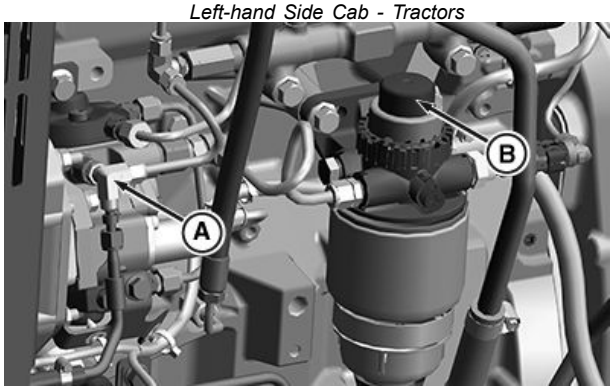

Left-hand Side OOS - Tractors

PY39699 —UN—09FEB17

VP27597,0000347 -19-09FEB17-2/2

Electrical Service Precautions

CAUTION: Keep all sparks and flames away from batteries, as gas given off by electrolyte is explosive. When using a booster battery, follow instructions in Operating the Engine section.

To avoid shocks and burns, disconnect negative (-) cable (B) before servicing any part of the electrical system.

Keep battery cover (not shown) and all electrical shields in place.

TS204 —UN—15APR13

A—Positive (+) Battery Cable **B—Negative (—) Battery Cable**

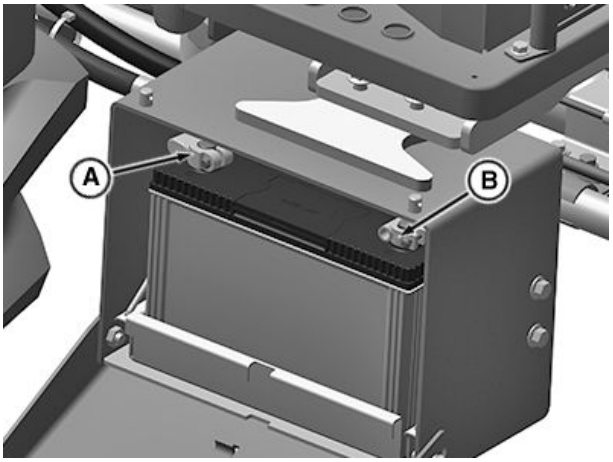

PY35473 —UN—20MAR17

Battery With Box (OOS)

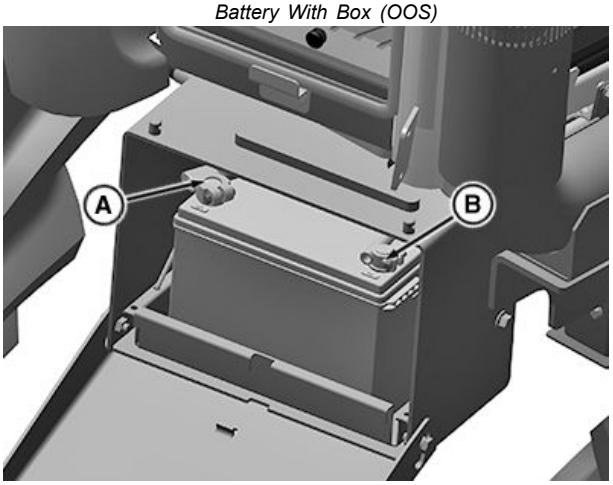

PY35474 —UN—20MAR17

Battery With Box (Cab)

RM87422,000063E -19-20MAR17-1/1

Inspect Alternator/Fan Belt Tensioner

Service Interval—250 Hours

Replace if worn or damaged. (See procedure in Service section.)

NOTE: Run engine for five minutes to warm a cold belt. Let a hot belt cool for 15 minutes before adjustment.

Check tension by pressing belt midway between pulleys. Belt should deflect about 19 mm (3/4 in.) at 89 N (20 lb force).

IMPORTANT: Pry against alternator frame only.

Adjust tension by loosening flange nut (A) and mounting lock nut (B). Apply force to alternator frame (C) until belt tension is correct. Tighten cap screw and bolt.

A—Tension Adjustment Flange Nut
B—Alternator Mounting Lock Nut
C—Alternator Frame

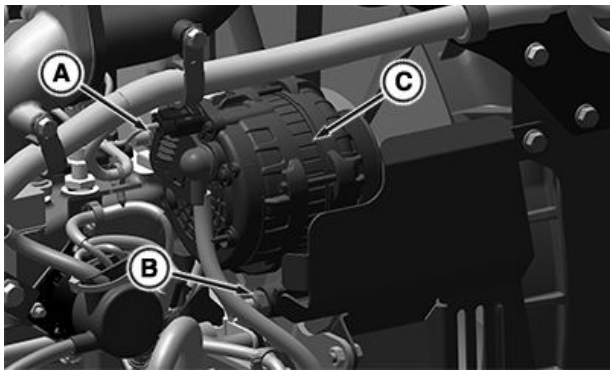

PY41794 —UN—27JUL17

Adjust Alternator/Fan Belt For OOS

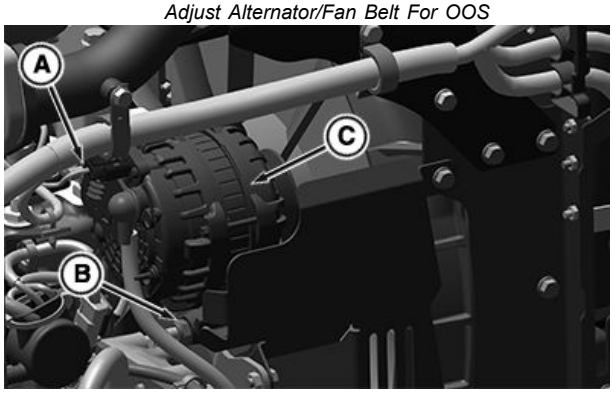

PY41795 —UN—27JUL17

Adjust Alternator/Fan Belt For Cab

RM87422,000063F -19-27JUL17-1/1

Replace Alternator/Fan Belt

1. Raise hood.
2. Loosen flange nut (A) and lock nut (B). Remove alternator (C).
3. Remove belt from drive pulley.
4. Install new belt in reverse order of removal.
5. Install alternator (C) by tightening flange nut (A) and lock nut (B).
6. Adjust belt tension.

A—Tension Adjustment Flange Nut
B—Alternator Mounting Lock Nut
C—Alternator

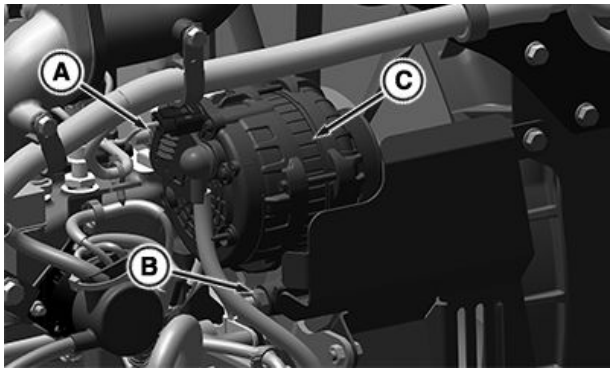

PY41794 —UN—27JUL17

Replace Alternator/Fan Belt For OOS

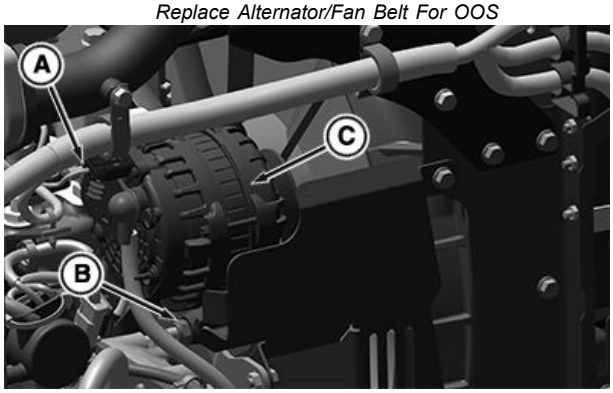

PY41795 —UN—27JUL17

Replace Alternator/Fan Belt For Cab

RM87422,0000640 -19-27JUL17-1/1

Charge Battery

CAUTION: Gas given off by battery is explosive. Keep sparks and flames away from battery. Before connecting or disconnecting a battery charger, turn charger off. Make last connection and disconnection at a point away from battery.

TS204 —UN—15APR13

1. With charger off, attach positive battery charger lead to positive (+) battery terminal (A). Attach negative charger lead to tractor frame, away from the battery.
2. Follow the instructions provided by the charger.
3. To disconnect battery charger, turn charger off. Remove negative charger lead first, then positive lead.

A—Positive (+) Battery Terminal

B—Negative (-) Battery Terminal

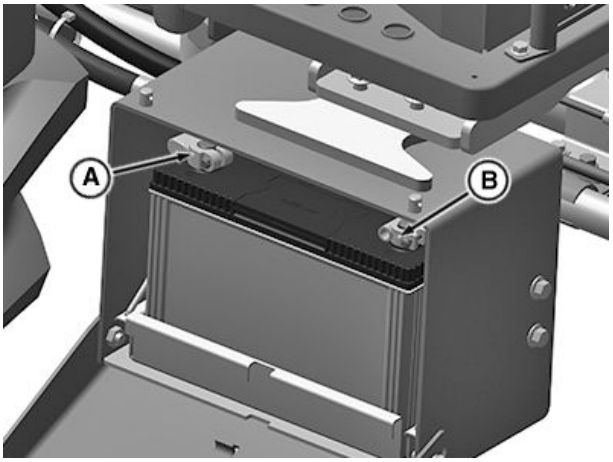

PY35473 —UN—20MAR17

Battery With Box (OOS)

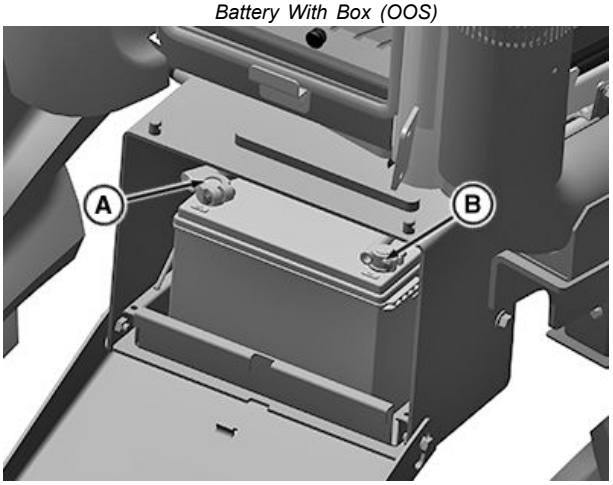

PY35474 —UN—20MAR17

Battery With Box (Cab)

RM87422,0000641 -19-20MAR17-1/1

Clean Battery

Service Interval—50 Hours / Weekly

1. Stop engine. (See procedure in Operating the Engine section.)
2. Remove battery cover. (See ACCESS BATTERY in this section.)
3. Wipe battery with a damp cloth. Clean and tighten connections, if needed.
4. Install cover and lower hood.

SD74272,000027F -19-17JUL12-1/1

Check Battery Condition

Service Interval—50 Hours / Weekly

CAUTION: Battery gas can explode. Keep sparks and flames away from batteries. Use a flashlight to check battery electrolyte level.

Never check battery charge by placing a metal object across the posts. Use a voltmeter or hydrometer.

Always remove grounded (—) battery clamp first and replace it last.

TS204 —UN—15APR13

1. Use a battery hydrometer to check specific gravity of electrolyte in each cell. Charge battery if reading is below 1.215. Replace battery if difference between cells is more than 0.050 or if battery will not charge above 1.225.
2. Always correct specific gravity reading for electrolyte temperature variation. Add 0.004 to the reading obtained in step one for every 10 °F above 80 °F (add 0.007 to the reading for every 10° above 27 °C). Subtract at same rate if electrolyte temperature is below 80 °F (27 °C). Correct specific gravity of a fully charged battery is 1.265 to 1.280.
3. A battery is considered fully charged when three consecutive hydrometer readings, taken at hourly intervals, show no rise in specific gravity.

SD74272,0000280 -19-17JUL12-1/1

Remove Battery (IOOS and Cab)

CAUTION: To avoid sparks, disconnect negative (—) cable first and connect it last.

1. Remove and retain quick-lock pins (A) on both sides from battery cover (B) as shown.
2. Hold footstep with battery cover (B) and pull towards up from pins on both sides as shown and hang battery cover (B) towards down.
3. Slide the battery tray (C) with battery towards outside.
4. Remove rubber boots (D and E) away from negative (—) and positive (+) battery cable (F and G).
5. Loosen nut (H) on negative (—) and positive (+) battery cable (F and G) using spanner (10 mm).
6. Disconnect negative (—) and positive (+) battery cable (F and G) from battery (I).

A—Quick-Lock Pin
B—Battery Cover
C—Battery Tray
D—Rubber Boot (Black)
E—Rubber Boot (Red)
F—Negative Terminal (—)
G—Positive Terminal (+)
H—Nut (2 used)

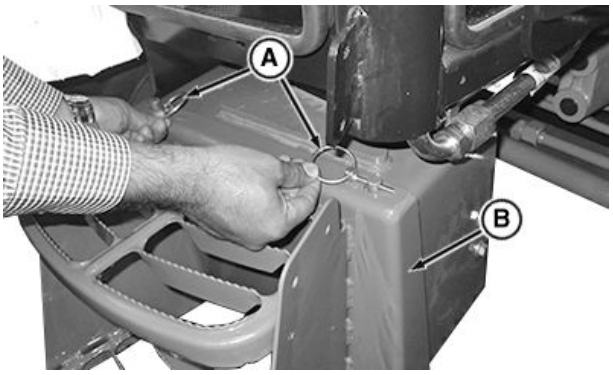

PY29583 —UN—07JUL16

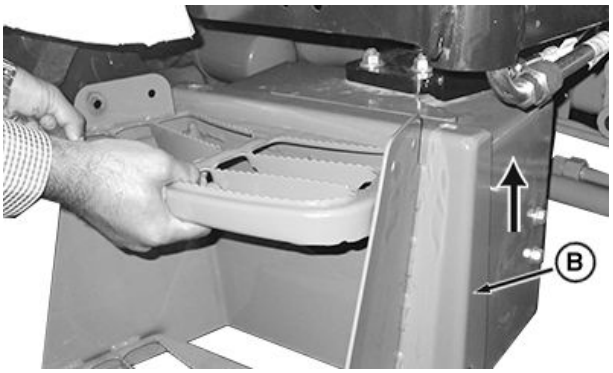

PY29584 —UN—07JUL16

PY31463 —UN—31AUG16

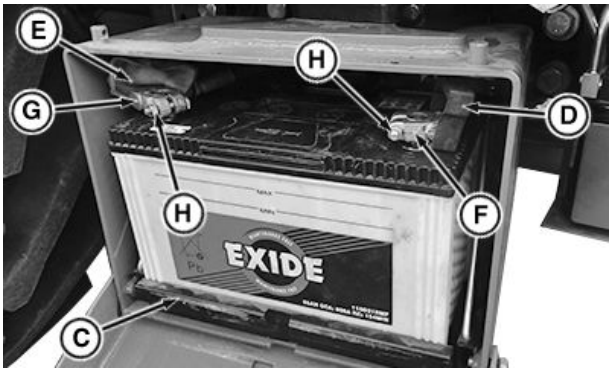

PY31465 —UN—31AUG16

Continued on next page

RM87422,0000644 -19-20MAR17-1/2

7. Slide the battery tray (C) with battery (I) towards outside from battery cover.
8. Remove cap screw (J) on both sides of holding bracket (L).
9. Remove holding bracket (L) and rods (K) from battery (I).
10. Remove battery (I) from machine.

I— Battery
J— Cap Screw (2 used)
K—Rod
L—Holding Bracket

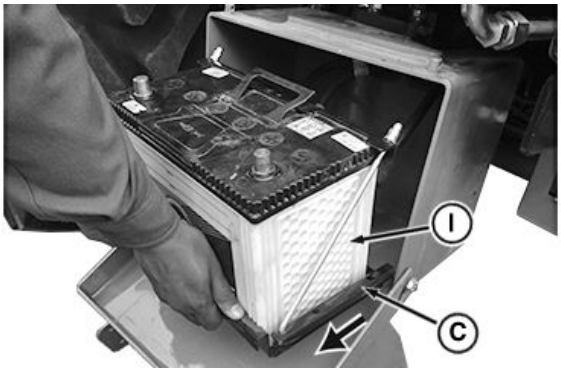

PY31464 —UN—31AUG16

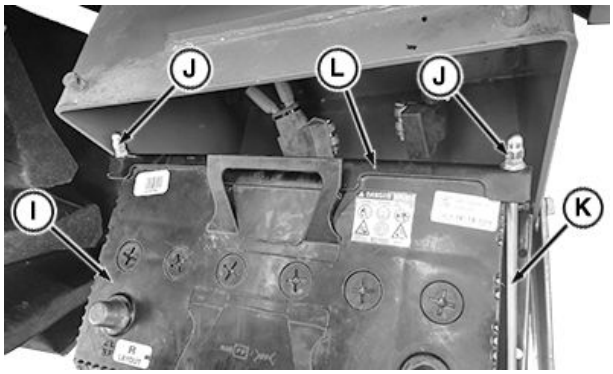

PY31466 —UN—31AUG16

RM87422,0000644 -19-20MAR17-2/2

Battery Replacement Specifications — OOS

When replacing battery, use John Deere battery or equivalent. See your John Deere dealer.

	Specification
Battery—Volts	12 Volts
Ampere Rating	85 AH
Cold Cranking Amps at -18 °C (0 °F)	800 CCA

RM87422,000064F -19-29SEP17-1/1

Battery Replacement Specifications — Cab

When replacing battery, use John Deere battery or equivalent. See your John Deere dealer.

	Specification
Battery—Volts	12 Volts
Ampere Rating	— AH
Cold Cranking Amps at -18°C (0 °F)	770 CCA

RM87422,0000650 -19-29SEP17-1/1

Service Battery

1. Keep battery clean by wiping with a damp cloth. Keep terminals (A and B) clean and tight. To remove any corrosion, wash terminals with a solution of four parts water to one part baking soda.

CAUTION: To avoid sparks, disconnect negative (ground) cable first and connect it last.

2. Keep battery fully charged, especially during cold weather. If a battery charger is connected, attach positive cable to the positive (+) battery terminal (A). Connect the negative (-) battery charger cable to a good ground on tractor frame.
3. Coat terminals with a small amount of grease.

A—Positive (+) Battery Terminal

B—Negative (—) Battery Terminal

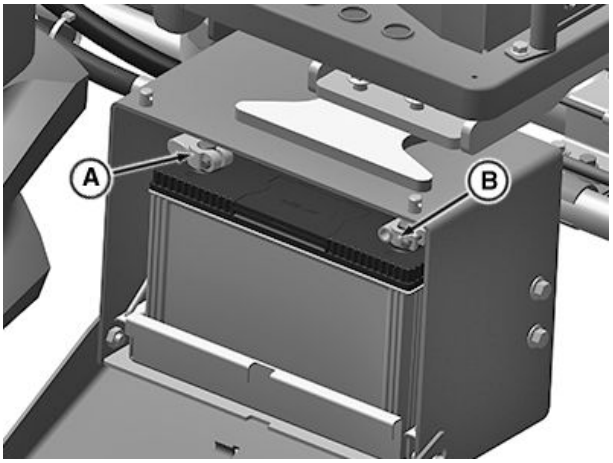

PY35473 —UN—20MAR17

Battery With Box (OOS)

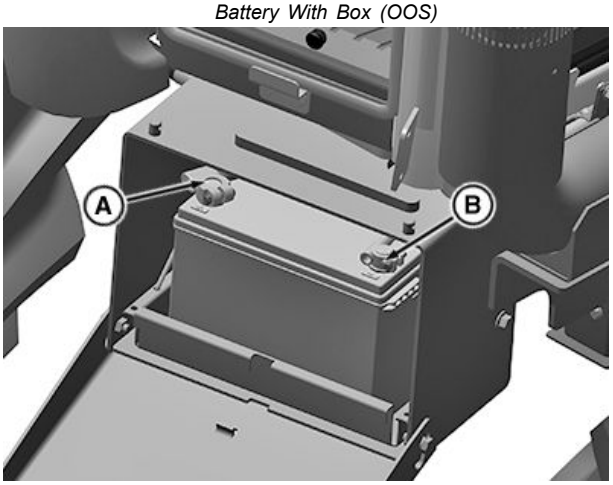

PY35474 —UN—20MAR17

Battery With Box (Cab)

RM87422,0000643 -19-20MAR17-1/1

Access Fuses and Relays

To remove fuse box cover:
- **OOS** — Pinch tabs and pull off cover (A).
- **Cab** — Pry off cover (B).

Fuse Rating	Color
5 Amp	Orange
10 Amp	Red
15 Amp	Blue
20 Amp	Yellow
30 Amp	Green

IMPORTANT: Do not replace original fuse with higher rated fuse or machine damage may occur.

If original size fuse will not carry electrical load and continues to blow contact your John Deere dealer.

A—Fuse Box Cover (OOS) **B—Fuse Box Cover (Cab)**

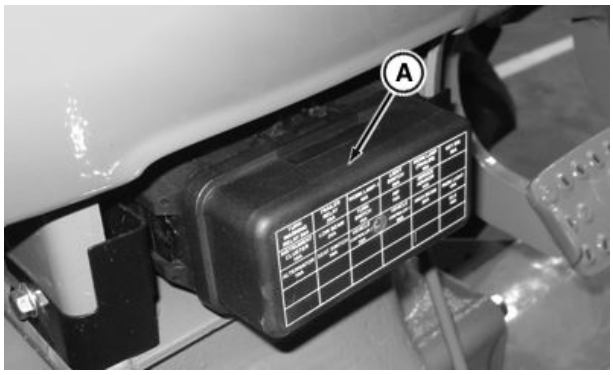

PY18054 —UN—22MAR13

OOS Fuse Box Location

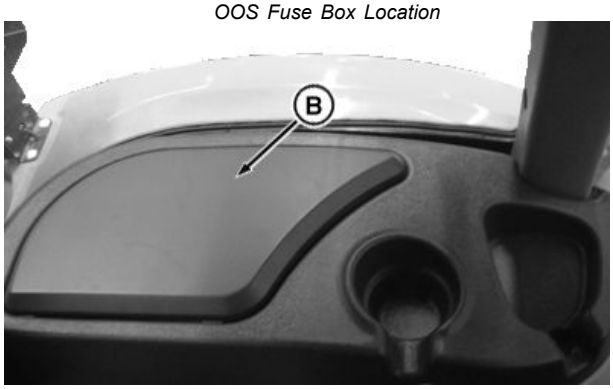

PY16262 —UN—19JUL12

Cab Fuse Box Location

SD74272,00004E6 -19-18MAR13-1/1

Load Center - 1 Fuses — OOS (PowrReverser™ Transmission)

A12 A1

INSTRUMENT CLUSTER 10A	LIGHT SW 20A	HAZARD 15A	BRAKE LIGHT 10A	ECU 20A	KEY SW 30A
IGNITION 15A	WORK LIGHT 15A	LOADER JOYSTICK 10A	FCC 20A	SEAT SW 5A	TRAILER POWER 20A
LOW BEAM 15A	HIGH BEAM 15A	ELX POWER 10A	TAIL LIGHT 5A	TURN SW 10A	WORK LIGHT-TRAILER 10A
86 BRAKE LIGHT RELAY 30 87 87A 85		EH SYSTEM 1A	EH SYSTEM 10A	EH SYSTEM 10A	STARTER RELAY 1A
					BACKUP ALARM 5A

E12 E1

APY01534 —UN—03OCT18

Load Center Cover Printing Details

SB57389,00006CB -19-04OCT18-1/1

Load Center - 2 Relays — OOS (PowrReverser™ Transmission)

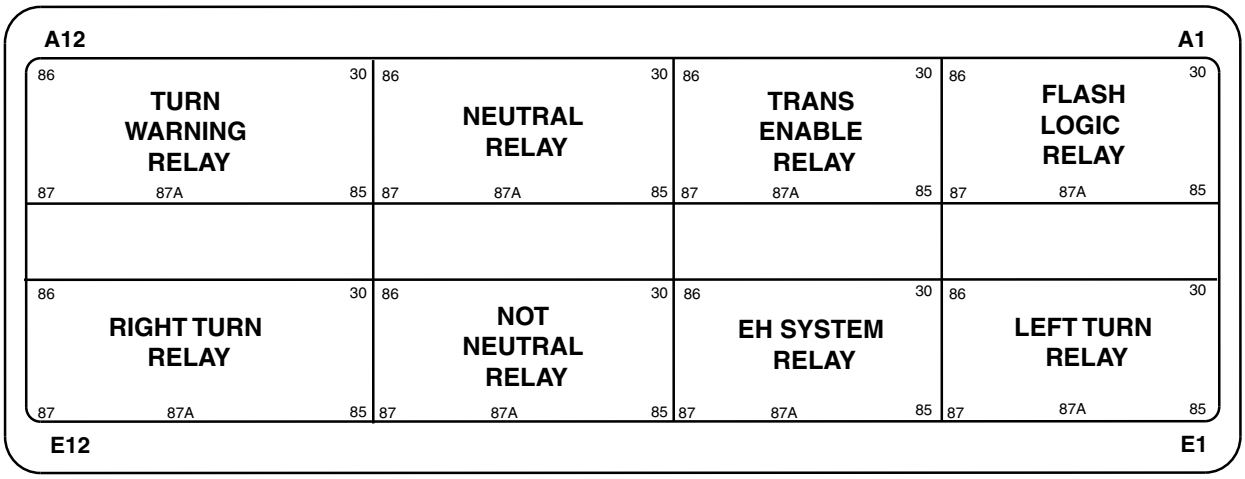

Load Center Cover Printing Details

SB57389,00006CC -19-04OCT18-1/1

Load Center - Fuses and Relays— OOS (SyncShuttle Transmission)

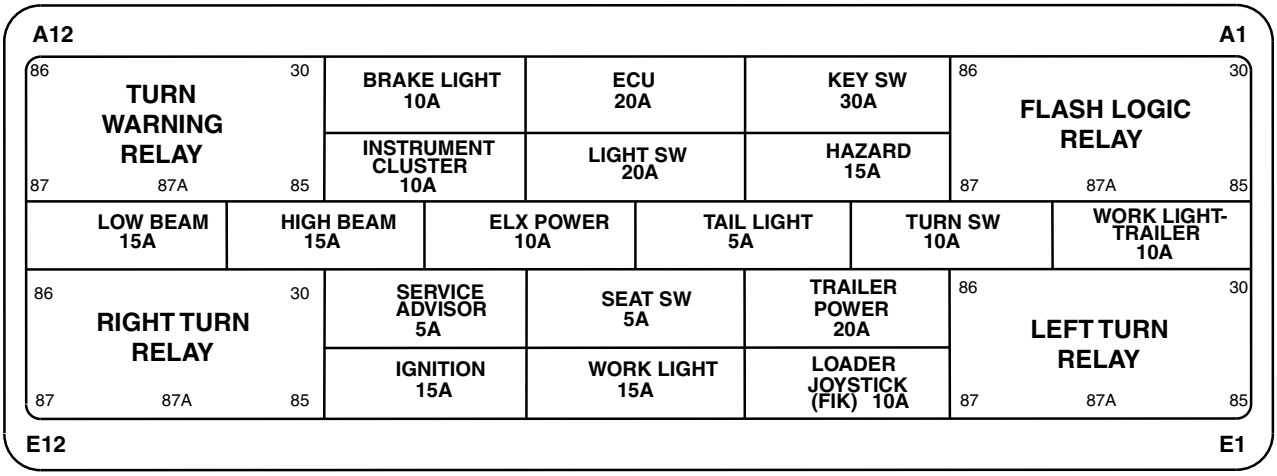

Load Center Cover Printing Details

SB57389,00006CA -19-04OCT18-1/1

Load Center Fuses and Relays—Cab (PowrReverser™ Transmission)

F03— Key Switch, 30 Amp
F07— Horn, 10 Amp
F08— Light Switch, 20 Amp
F09— Head Light, 10 Amp
F10— Turn Switch, 10 Amp
F11— Hazard, 30 Amp
F12— Brake Light, 20 Amp
F14— RH Tail, 10 Amp
F15— LH Tail, 10 Amp
F16— RR Work, 30 Amp
F17— FR Work, 30 Amp
F18— Cluster, 20 Amp
F19— Junction Block Battery, 30 Amp
F20— Junction Block Acc, 30 Amp
F21— Trailer Power, 20 Amp
F22— Trailer Flood, 10 Amp
F23— Right Blower, 30 Amp
F24— Left Blower, 20 Amp
F25— Wiper, 20 Amp
F26— Dome Lamp, 10 Amp
F27— Radio, 10 Amp
F28— Seat Switch, 10 Amp
F29— Backup Alarm, 05 Amp
F30— EH System, 10 Amp
F31— EH System, 10 Amp
F32— FCC, 10 Amp
F33— ECU, 20 Amp
F34— Loader Joystick, 10 Amp
SPARE 20—Spare Fuse, 20 Amp
SPARE 10—Spare Fuse, 10 Amp
K02— Neutral Start Relay
K04— Accessory Relay
K05— Head Light Relay
K06— Turn Hazard Relay
K07— Left Turn Relay
K08— Right Turn Relay
K09— Flash Logic Relay
K10— Tail / Clearance Relay
K11— Rear Work Light Relay
K12— Front Work Light Relay
K13— Trailer Power Relay
K14— HVAC Relay
K15— Left Blower Relay
K16— Right Blower Relay
K17— Wiper Relay
K18— EH System Relay
K19— Not Neutral Relay
K20— Transmission Enable Relay
K25— Brake Light Relay
V01— Diode, Start Relay
V02— Diode, EH System

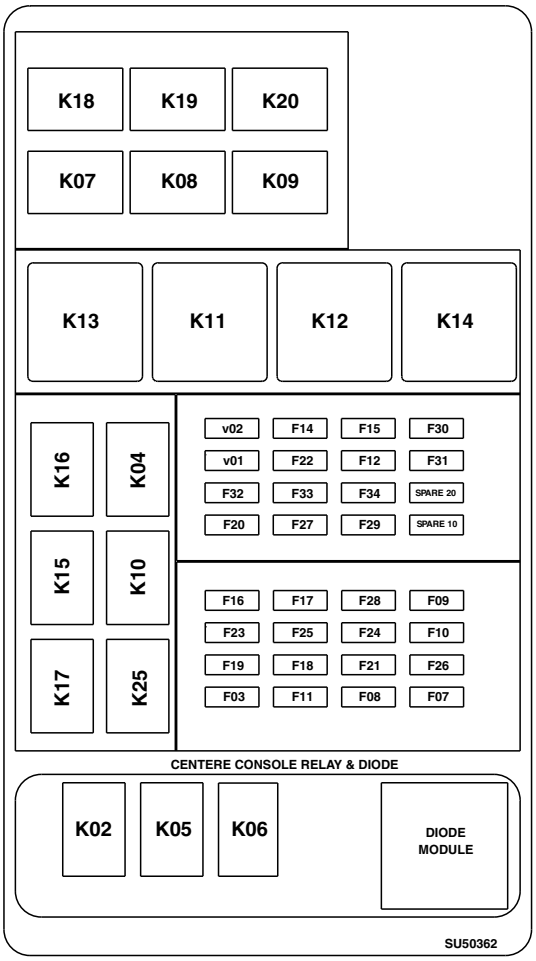

PY35479 —UN—22MAR17

RM87422,0000648 -19-29SEP17-1/1

Load Center Fuses and Relays—Cab (Sync Shuttle Transmission)

F03— Key Switch, 30 Amp
F07— Horn, 10 Amp
F08— Light Switch, 20 Amp
F09— Head Light, 10 Amp
F10— Turn Switch, 10 Amp
F11— Hazard, 30 Amp
F12— Brake Light, 20 Amp
F14— RH Tail, 10 Amp
F15— LH Tail, 10 Amp
F16— RR Work, 30 Amp
F17— FR Work, 30 Amp
F18— Cluster, 20 Amp
F19— Junction Block Battery, 30 Amp
F20— Junction Block Acc, 30 Amp
F21— Trailer Power, 20 Amp
F22— Trailer Flood, 10 Amp
F23— Right Blower, 30 Amp
F24— Left Blower, 20 Amp
F25— Wiper, 20 Amp
F26— Dome Lamp, 10 Amp
F27— Radio, 10 Amp
F28— Seat Switch, 10 Amp
F32— FCC, 10 Amp
F33— ECU, 20 Amp
F34— Loader Joystick, 10 Amp
SPARE 10—Spare Fuse, 10 Amp
SPARE 20—Spare Fuse, 20 Amp
SPARE 30—Spare Fuse, 30 Amp
K04— Accessory Relay
K05— Head Light Relay
K06— Turn Hazard Relay
K07— Left Turn Relay
K08— Right Turn Relay
K09— Flash Logic Relay
K10— Tail / Clearance Relay
K11— Rear Work Light Relay
K12— Front Work Light Relay
K13— Trailer Power Relay
K14— HVAC Relay
K15— Left Blower Relay
K16— Right Blower Relay
K17— Wiper Relay
K25— Brake Light Relay
V01— Diode, Start Relay

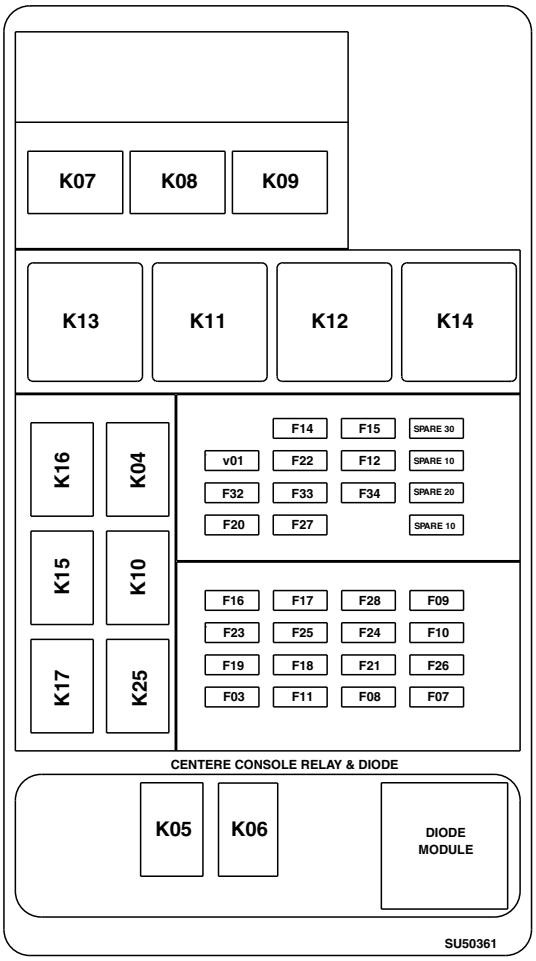

PY35480 —UN—22MAR17

RM87422,0000649 -19-22MAR17-1/1

Fusible Link Location

Electrical circuits are protected by a fusible link.

Raise hood. Fusible link junction block (A) is located on right-hand side of engine.

A—Fusible Link Junction Block

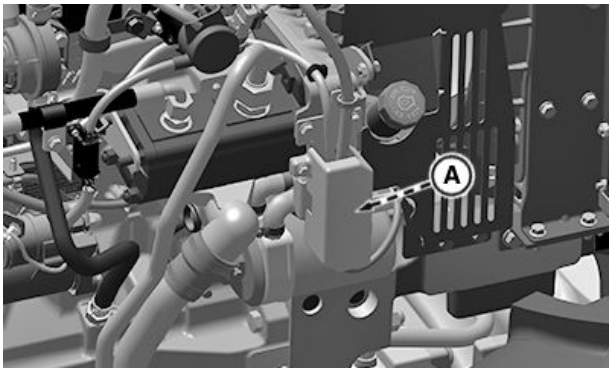

PY35481 —UN—22MAR17

RM87422,000064A -19-22MAR17-1/1

Starter Wiring Connections

IMPORTANT: Disconnect battery negative (ground) cable before servicing any part of electrical system. Make all other connections before connecting ground cable.

Connect positive battery cable (A) and alternator cable (B) to solenoid post (C). Connect the small white wire (D) to solenoid terminal (E).

A—Positive Battery Cable Wiring Harness
B—Alternator Cable
C—Solenoid Post
D—Small White Wire
E—Solenoid Terminal

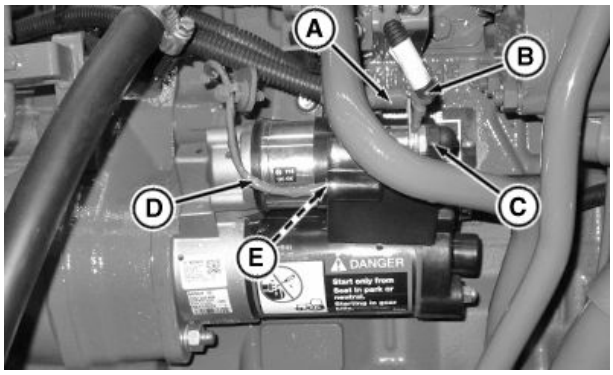

PY35482 —UN—22MAR17

RM87422,000064B -19-22MAR17-1/2

CAUTION: Maintain the orientation of battery to starter wiring terminal (F) towards engine whenever removed for Service.

F—Battery To Starter Wire Terminal

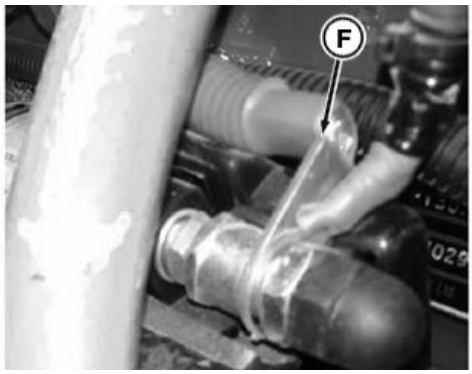

PY20824 —UN—04AUG14

RM87422,000064B -19-22MAR17-2/2

Alternator Wiring Connections

IMPORTANT: Disconnect battery negative (ground) cable before servicing any part of electrical system. Make all other connections before connecting ground cable.

To prevent damage to electrical system, disconnect alternator before making any electrical weld repairs. If an attached implement needs weld repair, disconnect it from tractor before welding, to prevent damage to tractor electrical system.

If alternator is disconnected for any reason, connect wires (A) and (B) as shown at right.

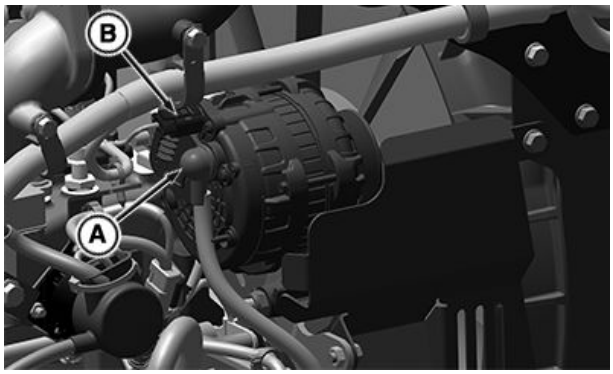

Connect Wires

A—Alternator Power Cable
B—Alternator Jumper Wiring Harness

PY35483 —UN—27JUL17

RM87422,000064C -19-22MAR17-1/1

Handling Halogen Light Bulbs Safely

CAUTION: Halogen bulbs (A) contain gas under pressure. Handling a bulb improperly could cause it to shatter into flying fragments. To avoid possible injury:

- **Handle bulb by its base. Keep bulb oil free; wear gloves to avoid touching glass.**
- **Turn off light switch and allow bulbs to cool before changing. Leave switch off until bulb change is done.**
- **Wear eye protection.**
- **Do not drop or scratch bulb. Keep away moisture.**
- **Place used bulb in the new bulb's carton and dispose of properly. Keep out of reach of children.**

A—Halogen Bulb

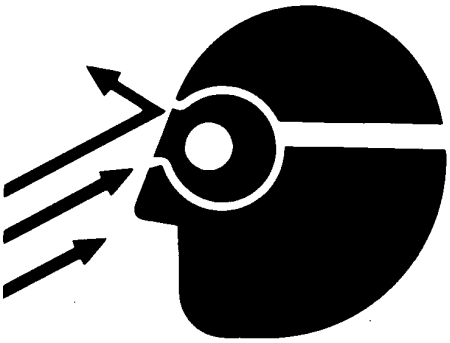

TS266 —UN—23AUG88

H39474 —UN—30JUN00

SD74272,000028C -19-17JUL12-1/1

Replace Headlight Element

CAUTION: To guard against personal injury, wear protective eyeglasses and clothing when handling bulb. Turn power off when installing and before removing bulb. Dispose of bulb with care.

Allow bulb to cool before removing.

Read and follow all bulb manufacturer's installation instructions.

1. Raise hood.
2. Remove connector (A).
3. Remove retaining clip (B).
4. Remove and discard old bulb (C).
5. Insert new bulb and close retaining clip.
6. Reattach connector (A) to new bulb and close hood.

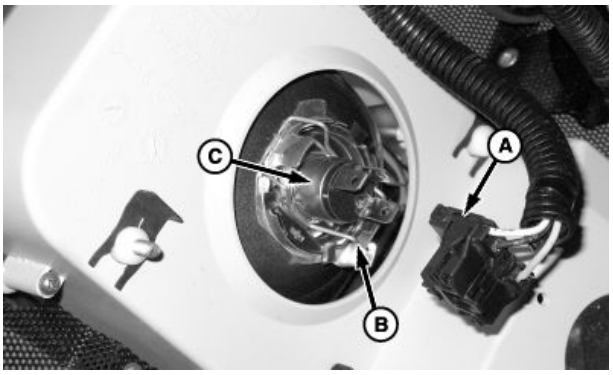

P14574 —UN—05NOV07

A—Connector
B—Clip
C—Bulb

NS43404,000054D -19-20NOV07-1/1

Adjust Headlights

IMPORTANT: Apply penetrating spray lubricant to the threads of top and bottom adjusting screws before starting procedure. If this is not done, it will be quite hard to turn adjusting screws in either direction.

- To raise light beam, turn top adjusting screws (A) counterclockwise.
- To lower light beam, turn top adjusting screws (A) clockwise.
- To turn light beam inward, turn bottom adjusting screw (B) counterclockwise.
- To turn light beam outward, turn bottom adjusting screw (B) clockwise.

PY18068 —UN—25MAR13

Right Side Headlight Shown

A—Top Adjusting Screws **B—Bottom Adjusting Screws**

Continued on next page

SD74272,00004EF -19-25MAR13-1/3

Adjust Headlight

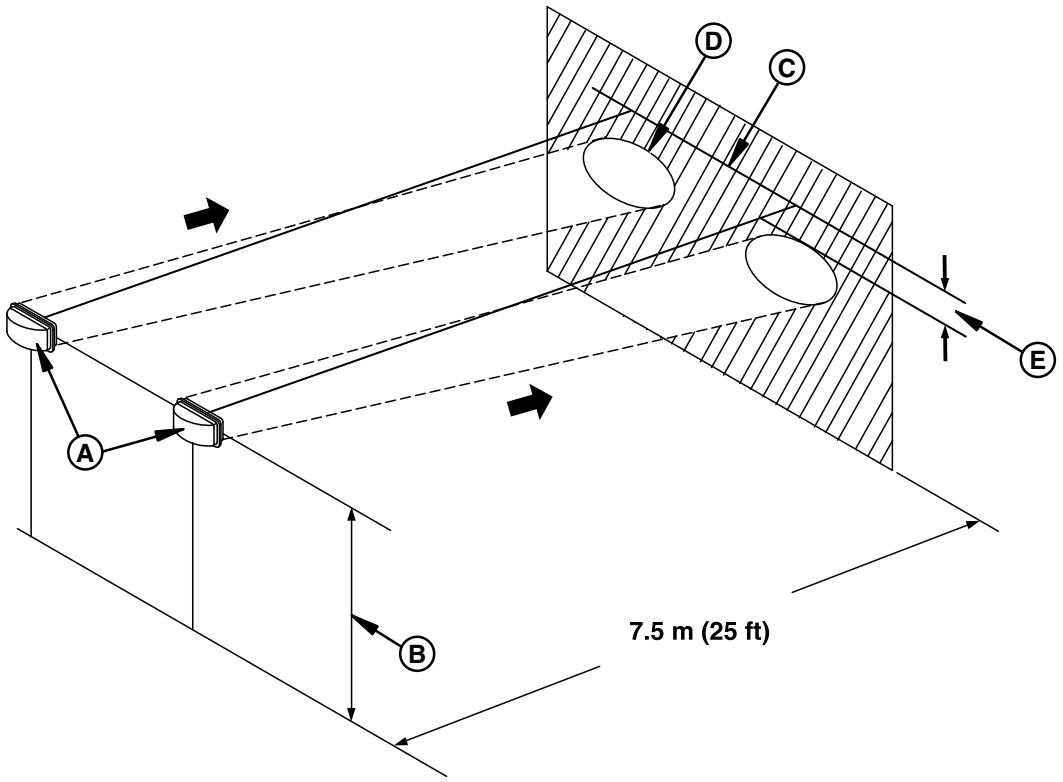

Headlight Aiming Diagram

A—Headlights
B—Distance from Center of Headlight to Ground
C—Horizontal Line on Wall
D—Border of Bright Area
E—10% of Distance (B)

1. Park the tractor on a level surface with headlights (A) 7.5 m (25 ft) from a vertical wall.
2. Measure the distance (B) from the center of a headlight to the ground.
3. Mark a horizontal line (C) on the wall, the same distance from the ground as (B).
4. Set headlights on low beam and observe bright areas on the wall.
5. Use screws at the back of lights for adjustment.

Continued on next page

SD74272,00004EF -19-25MAR13-2/3

Aim Headlights

1. Park tractor on level ground, with lights 8 m (25 ft) from a wall.
2. Measure from top of hood to the ground (A). Place a strip of masking tape (B) on the wall at the same height.
3. Place a piece of tape, folded in the middle to make a point, on the top front center of the hood.
4. Using the hood tape as a guide, sight across steering wheel and hood to locate tractor centerline. Mark tractor centerline (C) on wall.
5. From tractor centerline (C), mark a point 130 mm (5 in.) out in each direction (D). This mark locates a point directly in front of each headlight center.
6. Turn light switch to road lights position, then set headlight dimmer switch to low beam.
7. Locate small zone of bright light projected by each lamp. Cover other lamps if necessary. Top of zone (E) should be 130 mm (5 in.) below the tape. Left edge of zone (F) should be 130 mm (5 in.) left of lamp location marked (D).
8. Adjust as necessary.

A—Hood-to-Ground Distance
B—Masking Tape
C—Tractor Centerline
D—Center of Headlight
E—Top of Zone
F—Left Edge of Zone

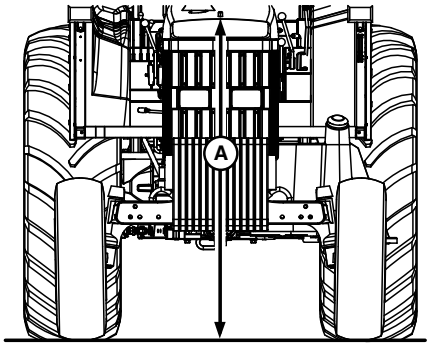

P9136 —UN—22SEP00

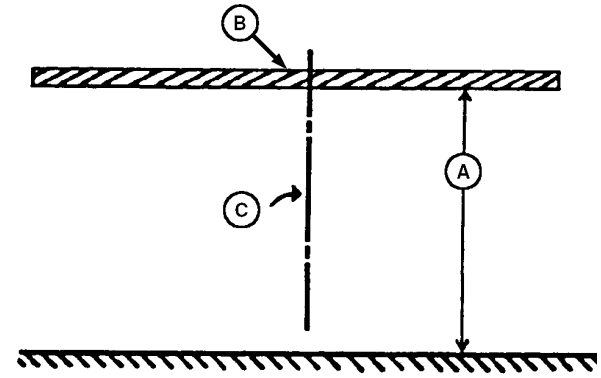

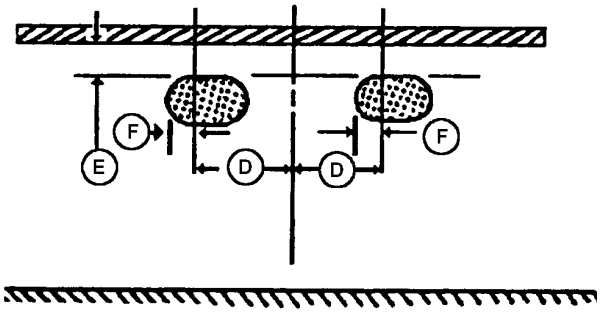

LV3020 —UN—10JUN99

SD74272,00004EF -19-25MAR13-3/3

Replace Roof Hazard Light Bulb—Cab

NOTE: Procedure is the same for all warning lights on machine.

1. Remove socket head screws (A) and lens (B).
2. Twist and pull to remove bulb socket (C) from lens.
3. Gently push and turn bulb (D) to remove.
4. Install new bulb.
5. Reinstall bulb sockets to lens.
6. Inspect rubber seal for cracks that may cause leaks. Replace if necessary.
7. Reinstall lens (B) with previously removed socket head screws (A).

A—Socket Head Screws
B—Lens
C—Bulb Socket
D—Bulb

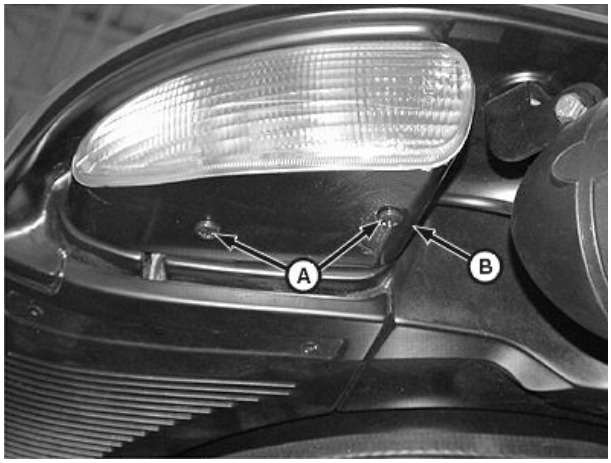

LV5559 —UN—29NOV00

Left Rear Shown

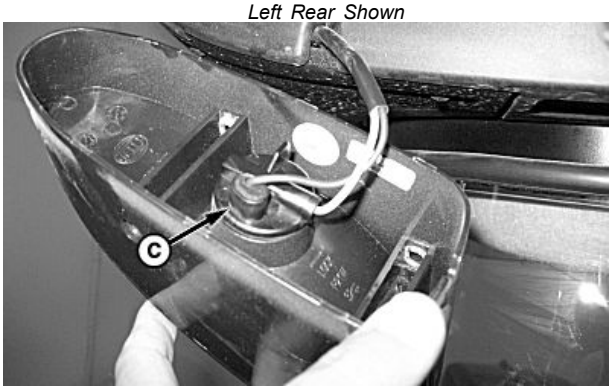

P14710 —UN—05NOV07

P14711 —UN—05NOV07

SD74272,000028F -19-17JUL12-1/1

Replace Tail Light and/or Warning Light Bulb—Open Operator's Station

NOTE: Bulb replacement is the same for tail light and warning light. Left side shown.

1. Remove screws and lens housing (A).
2. Push and twist bulb (B or C) to remove from socket.
3. Install new bulb, lens housing and screws.

A—Lens Housing
B—Warning Light Bulb
C—Tail Light Bulb

LV12521 —UN—13APR05

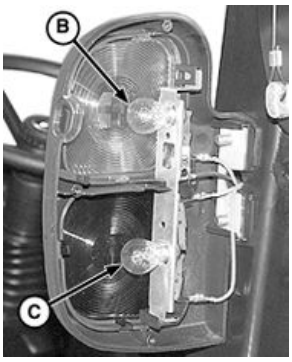

LV12522 —UN—13APR05

RM87422,000064D -19-22MAR17-1/1

Replace Tail and Turn Light Bulbs—Cab

.

NOTE: Procedure is the same for both sides of machine.

1. Remove screws (A) and cover (B).
2. Twist and pull to remove sockets (C) and (D) from lens.
3. Gently push and turn bulb (E) to remove.
4. Install new bulb.
5. Reinstall sockets to lens.
6. Inspect rubber seal for cracks that may cause leaks. Replace if necessary.
7. Reinstall lens (B) with previously removed screws (A).

A—Screws
B—Lens
C—Turn Signal Socket
D—Tail Light Socket
E—Bulb

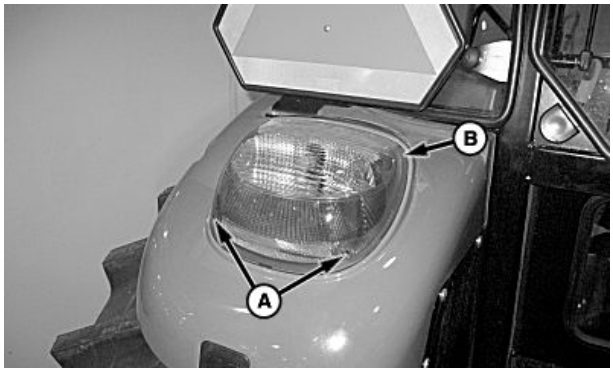

P14708 —UN—05NOV07

Left Rear Shown

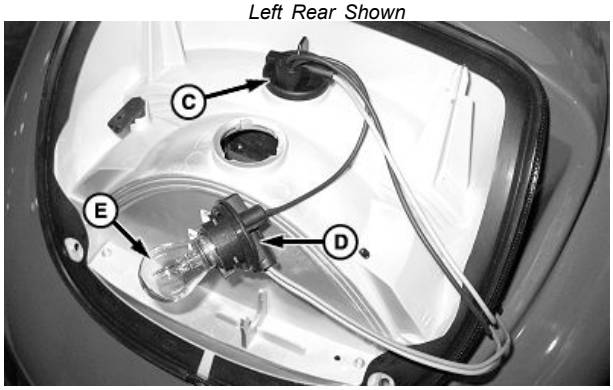

P14709 —UN—05NOV07

SD74272,0000291 -19-25JUL12-1/1

Replace Work Light Bulb—Open Operator's Station

1. Disconnect wiring harness connector (A).
2. Rotate bulb (B) counterclockwise and remove from housing (C).
3. Install new bulb into housing and rotate clockwise.
4. Connect wiring harness connector.

A—Wiring Harness Connector
B—Bulb
C—Housing

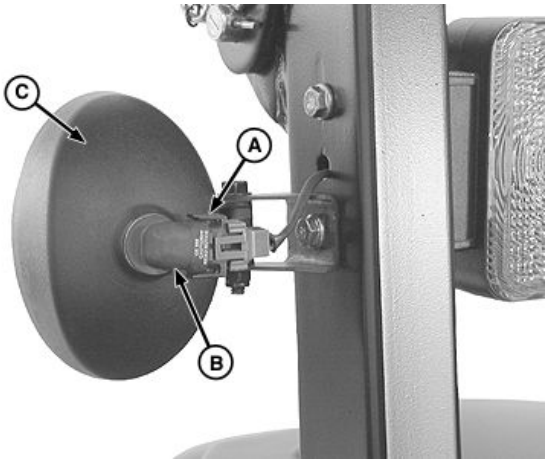

LV8585 —UN—14AUG03

Open Operator's Station

RM87422,000064E -19-22MAR17-1/1

Replace Worklight Element—Cab

1. Pry off cover (A).
2. Remove screws (B), retaining ring (C) and floodlight bezel (E) from housing.
3. Disconnect connectors (D).
4. Release clip. Remove and discard old bulb.
5. Inspect rubber seal for cracks that may cause leaks. Replace if necessary.
6. Slide new bulb into floodlight bezel (E) and reapply clip.
7. Connect bezel to connector.
8. Reinstall bezel, screws, and cover.

A—Cover
B—Screw (4 used)
C—Retaining Ring
D—Wiring Connector
E—Floodlight Bezel

LV5569 —UN—07DEC00

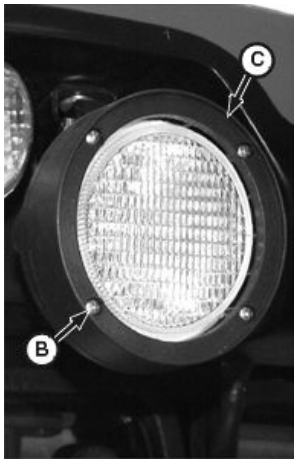

LV5570 —UN—07DEC00

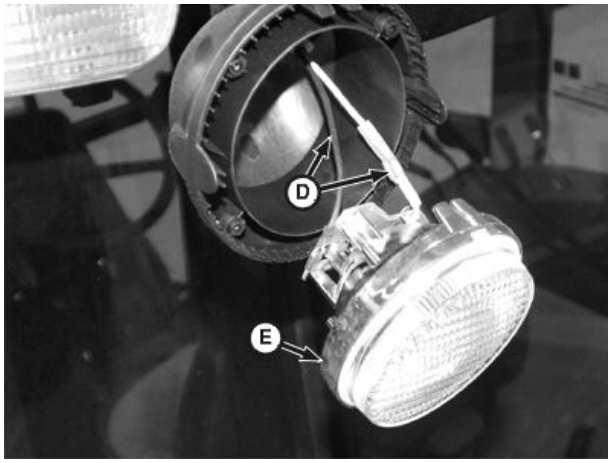

LV5571 —UN—07DEC00

SD74272,0000293 -19-30AUG12-1/1

Replace Dome Light Bulb—Cab

1. Remove dome light cover (B) from dome light housing (A) using a screwdriver.
2. Pull dome light bulb (C) from socket. Replace dome light bulb.
3. Install dome light cover to dome light housing.

A—Dome Light Housing
B—Dome Light Cover
C—Dome Light Bulb

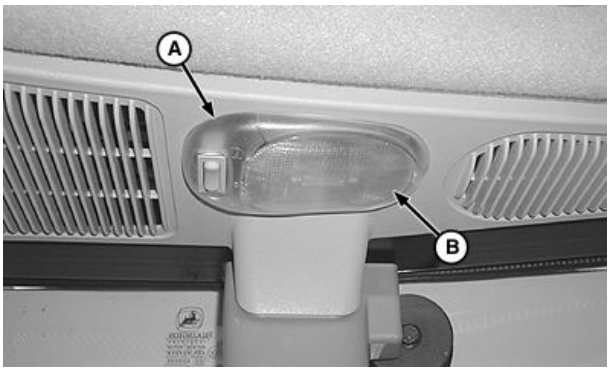

LV8588 —UN—14AUG03

LV8587 —UN—14AUG03

SD74272,0000294 -19-17JUL12-1/1

Replacing Controls Illumination Light Bulb (Cab)

1. Pry off panel (A).
2. Rotate light bulb retainer (B) counterclockwise approximately 1/4 turn and remove.
3. Pull out light bulb.
4. Install new bulb in reverse order of removal.

A—Panel
B—Light Bulb Retainer

LV9515 —UN—07AUG04

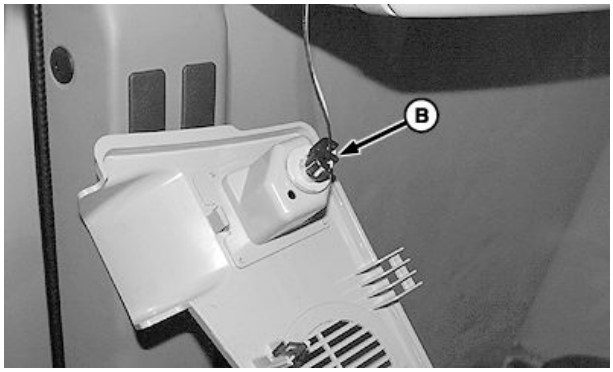

LV9598 —UN—07AUG04

SD74272,0000295 -19-17JUL12-1/1

Replacing Rotary Beacon Light Bulb (If Equipped)

CAUTION: Halogen bulbs contain gas under pressure. Handling a bulb improperly could cause it to shatter into flying fragments. (See HANDLING HALOGEN LIGHT BULBS SAFELY in this section.)

1. Loosen wing nut (A) and remove rotary beacon light assembly.
2. Install rubber cap (B).

A—Wing Nut **B—Rubber Cap**

LV9693 —UN—19AUG04

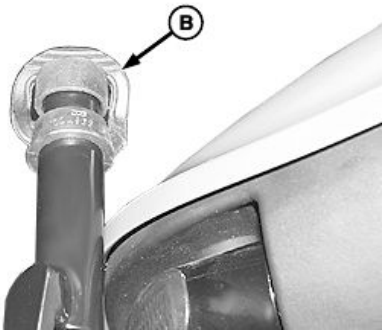

LV9694 —UN—19AUG04

SD74272,0000296 -19-17JUL12-1/2

3. Depress tab (A) and rotate lens (B) counterclockwise to remove.
4. Pull tab (C) away from bulb.
5. Unlatch retaining spring (D) and remove light bulb (E).
6. Install new bulb in reverse order of removal.

A—Tab
B—Lens
C—Tab
D—Retaining Spring
E—Bulb

LV9695 —UN—19AUG04

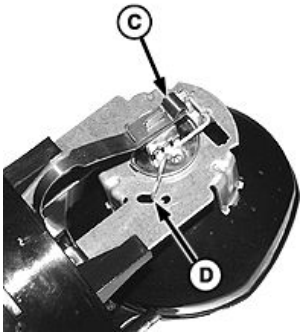

LV9696 —UN—19AUG04

LV9697 —UN—19AUG04

SD74272,0000296 -19-17JUL12-2/2

Engine Troubleshooting

Symptom	Problem	Solution
Engine hard to start or will not start	Improper starting procedure.	Reviewing starting procedure.
	No fuel.	Check fuel tank.
	Air in fuel tank.	Bleed fuel tank.
	Hand primer left raised.	Push primer down.
	Cold weather.	Use cold weather starting procedure.
	Slow starter speed.	See “Starter Cranks Slowly”.
	Crankcase oil too heavy.	Use oil of proper viscosity.
	Improper type of fuel.	Consult fuel supplier; use proper type fuel for operating conditions.
	Water, dirt, or air in fuel system.	Drain, flush, fill and bleed system.
	Clogged fuel filter.	Replace filter element.
	Dirty or faulty injectors.	Have John Deere dealer check injectors.
	Injection pump shut-off not reset.	Turn key switch to OFF then to ON.
	Fuel shut-off valve closed.	Open fuel shut-off valve.
Engine knocks	Insufficient oil.	Add oil.
	Injection pump out of time.	See your John Deere dealer.
	Low coolant temperature.	See your John Deere dealer.
	Engine overheating.	See “Engine Overheats”.
Engine runs irregularly or stalls frequently	Low coolant temperature.	See your John Deere dealer.
	Clogged fuel filter.	Replace filter element.
	Water, dirt, or air in fuel system.	Drain, flush, fill, and bleed system.
	Dirty or faulty injectors.	Have John Deere dealer check injectors.
	Improper type of fuel.	Use proper fuel.

Continued on next page

AH98466,0000978 -19-15JUL08-1/4

Symptom	Problem	Solution
Below normal engine temperature	Defective temperature gauge or sender.	Check gauge, sender, and conditions.
Lack of power	Engine overloaded.	Reduce load or shift to lower gear.
	Low fast idle speed.	See your John Deere dealer.
	Intake air restriction.	Service air cleaner.
	Clogged fuel filter.	Replace filter element.
	Improper type of fuel.	Use proper fuel.
	Overheated engine.	See “Engine Overheats”.
	Below normal engine temperature.	See your John Deere dealer.
	Improper valve clearance.	See your John Deere dealer.
	Dirty or faulty injectors.	Have John Deere dealer check injectors.
	Injection pump out of time.	See your John Deere dealer.
	Turbocharger not functioning .	See your John Deere dealer.
	Leaking exhaust manifold gasket .	See your John Deere dealer.
	Implement improperly adjusted.	See implement operator's manual.
	Restricted fuel line.	See your John Deere dealer.
	Restricted return line.	See your John Deere dealer.
	Improper ballast.	Adjust ballast to load.
Low oil pressure	Low oil level.	Add oil.
	Improper type of oil.	Drain, fill crankcase with oil of proper viscosity and quality.
High oil consumption	Crankcase oil too light.	Use proper viscosity oil.
	Oil leaks.	Check for leaks in lines, around gaskets and drain plugs.
	Restricted crankcase vent tube.	Clean vent tube.

Continued on next page

AH98466,0000978 -19-15JUL08-2/4

Symptom	Problem	Solution
	Defective turbocharger .	See your John Deere dealer.
Engine emits white smoke	Improper type fuel.	Use proper fuel.
	Low engine temperature.	Warm up engine to normal operating temperature.
	Defective thermostat.	See your John Deere dealer.
	Defective injection nozzles.	See your John Deere dealer.
	Engine out of time.	See your John Deere dealer.
	Cold start advance or light load advance not functioning.	See your John Deere dealer.
Engine emits black or gray exhaust smoke	Improper type of fuel.	Use proper fuel.
	Clogged or dirty air cleaner.	Service air cleaner.
	Engine overloaded.	Reduce load or shift to a low gear.
	Injection nozzles dirty.	See your John Deere dealer.
	Engine out of time.	See your John Deere dealer.
	Turbocharger not functioning.	See your John Deere dealer.
Engine overheats	Dirty radiator core, or grille screens.	Remove all trash.
	Engine overloaded.	Shift to lower gear or reduce load.
	Low engine oil level.	Check oil level. Add oil as required.
	Low coolant level.	Fill radiator to proper level, check radiator, coolant recovery tank, and hoses for loose connection or leaks.
	Faulty radiator cap.	Replace cap.
	Loose or defective fan belt.	Adjust belt tension.
	Cooling system needs flushing.	Flush cooling system.
	Defective thermostat.	See your John Deere dealer.
	Defective temperature gauge or sender.	See your John Deere dealer.

Continued on next page

AH98466,0000978 -19-15JUL08-3/4

Symptom	Problem	Solution
	Incorrect grade of fuel.	Use proper fuel.
High fuel consumption.	Improper type of fuel.	Use proper fuel.
	Clogged or dirty air cleaner.	Service air cleaner.
	Engine overloaded.	Reduce load or shift to a lower gear.
	Improper valve clearance.	See your John Deere dealer.
	Injection nozzles dirty.	See your John Deere dealer.
	Engine out of time.	See your John Deere dealer.
	Implement improperly adjusted.	See implement operator's manual.
	Low engine temperature.	See your John Deere dealer.
	Excessive ballast.	Adjust ballast to load.
	Defective turbocharger .	See your John Deere dealer.
	Restricted air intake system.	Check system.
	Plugged crankcase vent tube.	Clean vent tube.

AH98466,0000978 -19-15JUL08-4/4

Transmission Troubleshooting

Symptom	Problem	Solution
Transmission oil overheats	Low oil supply.	Fill system with correct oil.
	Clogged transmission-hydraulic oil filter.	Replace filter.
	Internal hydraulic leak.	See your John Deere dealer.
	Hitch feedback linkage improperly adjusted.	Reset linkage. See your John Deere dealer.
	Hydraulic motor not plumbed correctly.	See your John Deere dealer.
Low transmission pressure.	Low oil supply.	Fill system with correct oil.
	Clogged transmission-hydraulic oil filter.	Replace filter.
Transmission stuck in neutral or it is hard to shift any gear	Speed shift linkage stuck or rusty.	Clean or lubricate the speed shift lever linkages
	Interlock cable misadjusted	Adjust interlock cable per technical repair manual

SD74272,00002A9 -19-19JUL12-1/1

Hydraulic System Troubleshooting

Symptom	Problem	Solution
Entire hydraulic system fails to function	Low oil supply.	Fill system with correct oil.
	Clogged transmission-hydraulic filter.	Replace filter.
	Clogged transmission-hydraulic pickup screen.	Clean pickup screen.
	High-pressure internal leak.	See your John Deere dealer.
Hydraulic oil overheats	Low oil supply.	Fill system with correct oil.
	Clogged transmission-hydraulic oil filter.	Replace filter.
	Internal hydraulic leak.	See your John Deere dealer.
	Hitch feedback linkage improperly adjusted.	Reset linkage. See your John Deere dealer.
	Implement mounted hydraulic motor not plumbed correctly.	See your John Deere dealer.
	Basic Valve: SCV lever held in extend or retract position.	Return SCV lever to neutral position.

SD74272,0000344 -19-05SEP12-1/1

Deluxe Selective Control Valve Troubleshooting (If Equipped)

Symptom	Problem	Solution
Flow control knob will not turn	Dirt build-up.	Clean dirt from flow control knob and shaft.
Remote cylinder rate-of-travel too fast or too slow	Incorrect flow control adjustment.	Adjust flow control.
Detent does not hold SCV lever or releases too soon	Detent selector in wrong position.	Turn selector to correct position.
	Pressure restriction with some implements.	Reduce oil flow by changing flow control setting.
	Flow control or detent setting incorrect.	Adjust flow control and/or detent setting.
SCV lever does not release	Detent selector not in automatic detent position.	Turn selector to correct position.
	Built-in pressure leakage with some implements.	Increase oil flow by changing flow control setting.
	Flow control or detent setting incorrect.	Adjust flow control and/or detent setting.

SD74272,0000190 -19-09JUN12-1/1

Brakes Troubleshooting

Symptom	Problem	Solution
No solid pedal feel	Air in system.	See your John Deere dealer.
Pedal settles	Rear brake piston seal leaking.	See your John Deere dealer.
Excessive pedal travel	Air in system.	See your John Deere dealer.
Brakes drag during transport	Brakes out of adjustment.	See your John Deere dealer.

MX,TSIP,DA1 -19-24JUL95-1/1

Rockshaft and Quick-Coupler 3-Point Hitch Troubleshooting

Symptom	Problem	Solution
Insufficient transport clearance	Center link too long.	Adjust center link.
	Lift links to long.	Adjust lift links.
	Implement not level.	Level implement.
	Implement not properly adjusted.	See implement operator's manual.
	Front of center link in upper holes.	Move center link to lower holes.
	Sway chains adjusted to short.	Lengthen sway chains.
Hitch drops slowly	Rockshaft rate-of-drop control not properly set.	Adjust rate-of-drop knob.
Hitch fails to lift or lifts slowly	Excessive load on hitch.	Reduce load.
	Low oil level.	Fill system with proper oil.
	Hydraulic oil too cold.	Allow oil to warm.
	Transmission-hydraulic oil filter clogged.	Replace filter.
	Transmission-hydraulic pickup screen clogged.	Clean or replace pickup screen.
Implement will not operate at desired depth	Lift links too short.	Adjust lift links.
	Lack of penetration.	See implement operator's manual.
	Improper setting of limit stop.	Reset position limit.
	Improper setting of draft control.	See Rockshaft and 3-Point Hitch section.
Insufficient or no hitch response to draft load	Front attachment of center link in upper holes.	Move center link attachment to lower bracket holes.
	Draft control lever in “Off” position.	Move lever desired position.
	Lift links too short.	Adjust lift links.
	Lack of penetration.	See implement operator's manual.
	Rate-of-drop too slow.	Adjust rate-of-drop valve.
Hitch too responsive	Front attachment on center link in lower bracket holes.	Move center link attachment to upper bracket holes.

Continued on next page

SD74272,0000345 -19-05SEP12-1/2

Symptom	Problem	Solution
	Improper draft sensing adjustment.	Move lever forward.
Hitch drops too fast	Rate-of-drop set too fast.	Adjust rate-of-drop.
Rockshaft control levers “drift”. Levers too loose.	Friction disks are loose.	Adjust rockshaft control lever friction. See procedures in “Rockshaft and 3-Point Hitch” section or see your John Deere dealer.
Hitch settles too fast after tractor is parked and engine shut off	Internal system leakage.	See your John Deere dealer.

SD74272,0000345 -19-05SEP12-2/2

Remote Hydraulic Cylinders Troubleshooting

Symptom	Problem	Solution
Direction of remote cylinder travel is reversed	Improper hose connections.	Reverse hose connections
Hoses will not couple	Improper hose male tips.	Replace tip with ISO standard tips.
Remote cylinder will not lift load	Excessive load.	Reduce load.
	Hoses not completely installed.	Attach hoses correctly.
	Incorrect remote cylinder size.	Use correct size cylinder.
Direction of travel reverses on II SCV.	SCV lever moved to regenerate position.	Reverse hose couplings.

SD74272,0000346 -19-05SEP12-1/1

Electrical System Troubleshooting

Symptom	Problem	Solution
Battery will not charge	Loose or corroded connections.	Clean and tighten connections.
	Sulfated or worn-out battery.	Check electrolyte level and specific gravity.
	Loose or defective alternator/fan belt.	Adjust belt tension or replace belt.
Charging system indicator glows with engine running	Low engine speed.	Increase speed.
	Defective battery.	Check electrolyte level and specific gravity.
	Defective alternator.	See your John Deere dealer.
	Slipping alternator/fan belt.	Adjust belt tension.
Starter inoperative	Gear shift lever not in PARK	Move lever to PARK.
	PowrReverser™ Transmission: EH directional reverser lever in forward or reverse.	Move lever to NEUTRAL.
	PTO lever engaged.	Disengage PTO.
	Low battery output.	See your John Deere dealer.
	Blown fuse.	Replace fuse.
Starter cranks slowly	Low battery output.	Check electrolyte level and specific gravity.
	Crankcase oil too heavy.	Use proper viscosity oil.
	Loose or corroded connections.	Clean and tighten loose connections.
Light system does not function; rest of electrical system functions	Blown fuse.	Replace fuse.
Entire electrical system does not function	Faulty battery connections.	Clean and tighten connections.
	Sulfated or worn-out battery.	Check electrolyte level and specific gravity.
	Blown fuse.	Replace fuse.
Relay(s) sticking or nonfunctional; repeated failures	Diode to protect circuit from arcing has failed.	See your John Deere dealer.

NM61126,00004E2 -19-14JUL17-1/1

Heater and A/C System (Cab) Troubleshooting

Symptom	Problem	Solution
All cab electrical switches do not work	Loose, defective or blown fusible link.	See your John Deere dealer.
Blower malfunctioning	Blower does not work.	Check both blower fuses.
Blower operates only in purge position	One of two fuses blown.	Replace fuse.
	Blown blower resistance assembly.	See your John Deere dealer.
Heater does not work	Low coolant level.	Check coolant level; add if necessary.
	Faulty thermostat.	See your John Deere dealer.
	Heater control valve not functioning properly.	See your John Deere dealer.
	Heater core or hoses clogged or damaged.	Flush cooling system. Replace heater core or hoses. See your John Deere dealer.
Air conditioning does not work	Compressor belt loose or slipping.	Replace belt if necessary.
	Blown fuse.	Replace fuse.
	Defective switch.	See your John Deere dealer.
	Faulty wiring or loose connections.	See your John Deere dealer.
	Defective compressor clutch.	See your John Deere dealer.
Drafts	Poor air distribution	Adjust directional air louvers. Set blower switch to medium or low positions.
Inadequate air flow	Clogged air filters.	Clean filters.
	Evaporator core air flow restricted.	Clean evaporator and housing with compressed air.
	Faulty blower fan motors.	See your John Deere dealer.
	Defective blower switch.	See your John Deere dealer.
	Faulty wiring or loose connections.	See your John Deere dealer.
Water leaking or dripping from evaporator core compartment	Loose hose clamp.	Tighten clamp.

Continued on next page

SD74272,00002AA -19-19JUL12-1/3

Symptom	Problem	Solution
	A/C drip pan dirty.	Clean evaporator pan and outlet with compressed air.
	A/C drain tubes plugged.	Clean drain tubes.
Strange odors inside operator's cab	Dirty air filters.	Clean filters.
	Evaporator condenser pan dirty.	Clean pan and outlet with compressed air.
	Drain tubes plugged.	Clean drain tubes.
	Tobacco smoke and tar on evaporator exterior.	Clean filters.
Partial frosting and sweating of lines combined with poor cooling	Compressor belt slipping.	Replace belt.
	Loss of refrigerant.	Check system for leaks. See your John Deere dealer.
	Restricted or clogged liquid line.	See your John Deere dealer.
	Expansion valve malfunctioning.	See your John Deere dealer.
Ice flecks blowing from evaporator	Control dial set too low.	Adjust the temperature control to a warmer position.
Failure to cool	Insufficient blower speed.	Increase blower speed.
	Dirty air filters.	Clean filters.
	Debris on front grille and side screens.	Clean grille and screens.
	Lint or dirt on condenser fins.	Blow out condenser fins with compressed air.
	Refrigerant is lost or extremely low.	See your John Deere dealer.
	Loose compressor drive belt.	Replace belt.
	Compressor clutch not engaging.	See your John Deere dealer.
	Expansion valve not functioning.	See your John Deere dealer.
	Restriction in refrigerant system.	See your John Deere dealer.
	Faulty wiring or loose connections.	See your John Deere dealer.
	Defective temperature control switch.	See your John Deere dealer.

Continued on next page

SD74272,00002AA -19-19JUL12-2/3

Symptom	Problem	Solution
	Outside temperature too low. Below 21 °C (70 °F).	Wait until day gets warmer. If there is a malfunction in system, see your John Deere dealer.
	Condenser is overheating.	Clean condenser screens, cores and fins of condenser and radiator.
	Severe restriction in high side.	See your John Deere dealer.
	Burned out clutch field or faulty field.	See your John Deere dealer.
	Short circuit in control circuit or failure of a switch in circuit.	See your John Deere dealer.
Hissing noise at expansion valve	Loss of refrigerant.	Check system for leaks. See your John Deere dealer.
	Restriction in refrigerant system.	Check for kinks in hoses.
		Check receiver-dryer for uniformity of temperature. If temperature is not uniform, see your John Deere dealer.

SD74272,00002AA -19-19JUL12-3/3

Wiper(s), Worklights, Dome Light and Radio (Cab) Troubleshooting

Symptom	Problem	Solution
All cab electrical switches do not work	Loose, defective or blown fusible link.	See your John Deere dealer.
Window wiper(s) and washer will not run	Blown fuse.	Replace fuse.
	Defective switch(es).	See your John Deere dealer.
	Defective motor(s).	See your John Deere dealer.
	Faulty wiring or loose connections.	See your John Deere dealer.
Floodlights do not work	Blown fuse.	Replace fuse.
	Defective switch.	See your John Deere dealer.
	Faulty wiring or loose connections.	See your John Deere dealer.
Dome light does not work	Blown fuse.	Replace fuse.
	Defective bulb or switch.	Replace bulb or see your John Deere dealer.
	Defective door switch(es).	See your John Deere dealer.
	Faulty wiring or loose connections.	See your John Deere dealer.
Radio does not work	Blown fuse.	Replace fuse.

SD74272,00002AB -19-30AUG12-1/1

Place Tractor in Long-Term Storage

IMPORTANT: If the tractor will not be used for several months, the following recommendations for storage and removal from storage minimizes corrosion and deterioration.

NOTE: Use Engine Storage Kit available from your John Deere dealer.

Perform the following steps for long-term tractor storage:

1. Service engine air cleaner. (See SERVICE ENGINE AIR INTAKE AND PRE-CLEANER in General Maintenance and Inspection section.)
2. If coolant in tractor is more than 2 years old, flush cooling system. (See DRAIN, FLUSH AND REFILL COOLING SYSTEM in Maintenance—Cooling System section). Add 50% antifreeze water mixture. Test coolant for adequate cold-weather protection.
3. Change engine oil and filter (See procedure in Lubrication section).
4. Drain fuel tank. Remove fuel tank fill cap (A) and add 4 L (1 gal) of fuel. Install cap.
5. Remove alternator/fan belt after it has cooled.
6. Remove and clean battery. Store in a cool, dry place. Keep it charged. [1]
7. Tie or block clutch pedal in the disengaged position.
8. Coat exposed metal surfaces such as the adjustable front axles, if extended, with grease or a corrosion inhibitor.

[1]*Disconnect battery ground cable for short-term storage periods (20 to 90 days).*

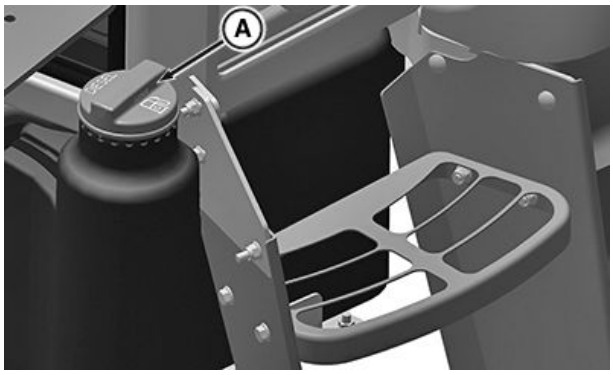

Left-Hand Side of Tractor—Cab

PY39741 —UN—06FEB17

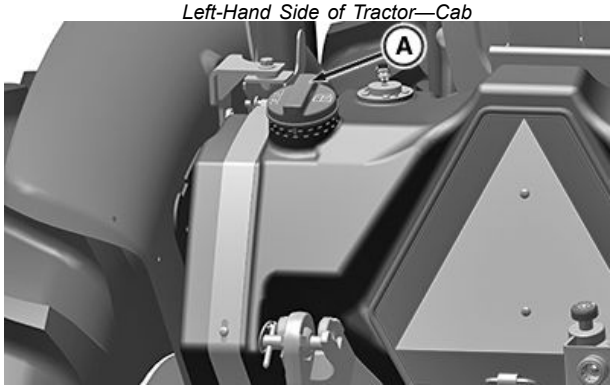

Back Side of Tractor—OOS

PY39742 —UN—06FEB17

A—Fuel Tank Fill Cap

Continued on next page

LGCKF7U,0000588 -19-27APR20-1/2

9. Use tape to seal air cleaner inlet (A), dust unloader valve (B), exhaust pipe, crankcase fill cap, fuel fill cap, coolant recovery tank, and transmission/hydraulic system fill cap.
10. Cover dash with opaque material to prevent gauges from fading.
11. Raise tires off ground. Protect from heat and sunlight.
12. Thoroughly clean tractor. Touch up any painted surfaces that are scratched or chipped.
13. If the tractor must be stored outside, cover it with a waterproof material.
14. **Cab:** Rotate air conditioner compressor pulley (C) several turns once a month to prevent seizure of compressor.

A—Air Cleaner Inlet
B—Dust Unloader Valve
C—Air Conditioner Compressor Pulley (Cab)

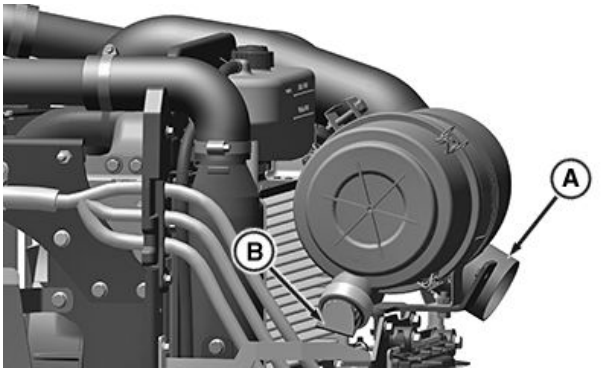

PY39746 —UN—06FEB17

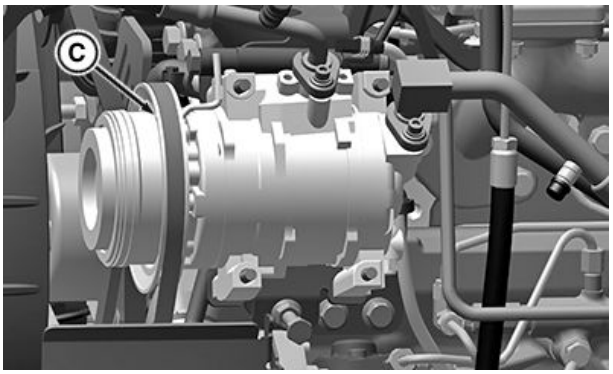

PY39747 —UN—06FEB17

LGCKF7U,0000588 -19-27APR20-2/2

Remove Tractor from Storage

Perform the following steps to remove the tractor from storage:

1. Check tire inflation pressure. (See Wheels, Tires, and Treads section.) Lower tires to ground.
2. Remove all coverings.
3. Unseal all openings sealed during storage.
4. Install battery.
5. Remove ties or block which secured clutch pedal down.

IMPORTANT: Cab tractor: If air conditioner compressor is seized, engine operation with compressor clutch engaged damages belt or compressor.

6. **Cab:** Check that air-conditioning compressor pulley moves freely and is not seized.
7. Install alternator/fan belt.
8. Check levels of engine oil, transmission/hydraulic oil, and engine coolant. Add fluids as needed.
9. Drain a small amount of fuel from the fuel tank to purge any moisture condensation that has collected.
10. Fill fuel tank.
11. Perform all appropriate services listed in Maintenance and Service Intervals section, as dictated by elapsed storage period.
12. Check instruments and indicators by turning key switch to RUN position.

IMPORTANT: Do not operate the starter more than 20 seconds at a time, and wait at least two minutes for starter to cool before trying again.

13. Make sure gearshift lever and PowrReverser™ lever (if equipped) is in neutral (“N”) and PTO control lever is in disengaged position. Pull hand throttle (A) all the way back, depress clutch pedal and crank engine until oil pressure rises. Turn key switch to OFF position.
14. Connect fuel shut-off solenoid wiring leads/connectors.
15. Depress clutch pedal and start engine. Operate engine at slow idle for several minutes. Warm up carefully and check all systems before placing tractor under load.

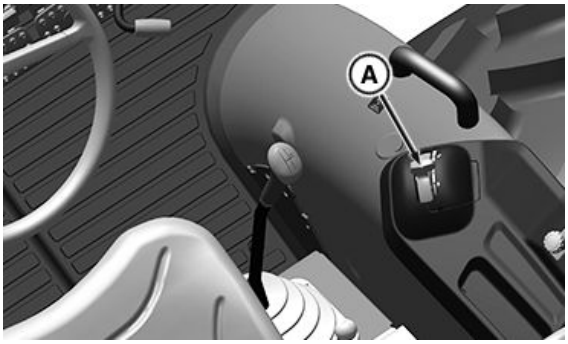

PY40567 —UN—20JUL17

OOS only

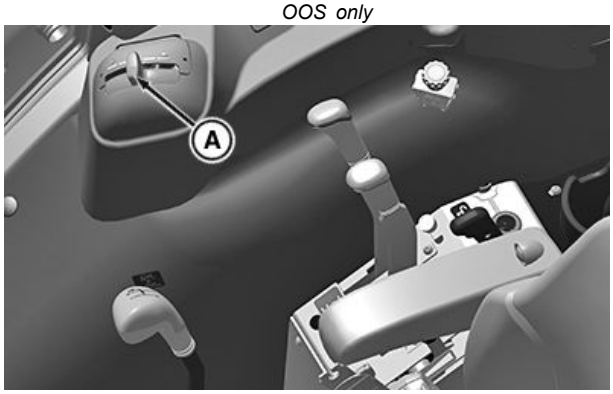

PY39749 —UN—06FEB17

Cab Only

A—Hand Throttle Lever

HS35416,0000157 -19-20JUL17-1/1

Paint Finish Care

Washing tractor regularly preserves the finish. Wash tractor in indirect sunlight. All cleaning agents should be flushed promptly and not allowed to dry on the paint surface.

IMPORTANT: Do not use hot water, strong soaps, or chemical detergents. Use liquid hand, dish, or car washing (non-detergent) soaps. Cleaning agents containing acid or abrasives should not be used.

Waxing tractor occasionally may be necessary to remove residue from the paint finish. Do not use waxes containing abrasive compounds.

Inspect paint surface, during washing or waxing, for chips and scratches. Repaint any areas where paint has been removed. Paint materials are available from your John Deere dealer.

HS35416,0000158 -19-06FEB17-1/1

General Specifications

NOTE: Specifications and design subject to change without notice.

Tractor Model	5045E	5055E	5065E	5075E
Engine & Engine Auxiliary				
Engine Model	3029 H	3029 H	3029 H	3029 H
Latest Emission Compliance	Final Tier 4	Final Tier 4	Final Tier 4	Final Tier 4
Aspiration	Turbocharged and Aftercooled	Turbocharged and Aftercooled	Turbocharged and Aftercooled	Turbocharged and Aftercooled
Gross Flywheel power @ rated rpm, SAE, HP	50 (37.4 kw)	59.5 (44.4 kw)	67.6 (50.4 kw)	73.7 (55 kw)
PTO HP @ rated rpm, HP (OOS)	37 (27.6 kw)	45 (33.6 kw)	53 (39.6 kw)	60.3 (45 kw)
PTO HP @ rated rpm, HP (Cab)		41 (30.6 kw)	49 (36.6 kw)	57.6 (43 kw)
Rated ERPM	2100	2100	2100	2100
Nominal Engine Torque	185 Nm @ 1600 RPM	230 Nm @ 1600 RPM	263 Nm @ 1700 RPM	304 Nm @ 1600 RPM
No. of cylinders	3			
Bore, mm	106.5			
Stroke, mm	110			
Displacement, Liters	2.9			
Compression Ratio	16.9:1			
Firing Order	1 - 2 - 3			
Intake Valve Clearance, mm	0.35			
Exhaust Valve Clearance, mm	0.45			
Low Idle, rpm	900, ±10			
High Idle, rpm	2200, ±10			
Operating Range, rpm	1700—2100			
Fuel Shut Off	Electric			
Injection Pump Timing	0.5° BTDC			
Cooling Package	Liquid cooled with overflow reservoir			
Radiator	56 mm	56 mm	56 mm	56 mm
FIP	Electronically controlled, high-pressure common rail with mechanical fuel transfer pump (manual priming)			
Muffler	Under hood			
Air Cleaner	FKB 06			
Engine shut off	Electrical Shut Off			
Anti-Freeze	50:50			
Transmission : SyncShuttle				
Shift Pattern	H			
Clutch Type	Dual			
Clutch size, in.	11"			
Service brake	Hydraulic Actuated Oil Immersed Disc Brake.			
No of speeds	9 Forward Gears 3 Reverse Gears			
Type of gearbox	SyncShuttle			
Standard PTO Speed @ Rated ERPM	540, Independent			
PTO - Standard	540 @2083 engine rpm			
Differential Controls	Pedal , Mechanical			

Continued on next page

NM61126,000051A -19-29SEP17-1/3

Tractor Model	5045E	5055E	5065E	5075E
Dual PTO	No			
Park brake	Park Pawl			
Transmission : PowrReverser™				
Shift Pattern	H			
Reversal	Left-hand side of Steering Wheel			
Clutch Type	Dual			
Clutch size, in.	11"			
Service brake	Hydraulic Actuated Oil Immersed Disc Brake.			
No of speeds	12 Forward Gears 12 Forward Gears			
Type of gearbox	PowrReverser™			
Standard PTO Speed @ Rated ERPM	540/540E, Independent			
PTO- Economy	540E @1588 engine rpm			
PTO - Standard	540 @2083 engine rpm			
Differential Controls	Pedal , Mechanical			
Dual PTO	Yes			
Park brake	Park Pawl			
Hydraulic				
Pump				
Single or Tandem	Tandem			
Pump discharge (l/min) at Engine rated rpm	68.8			
Pump rpm @ engine rpm	1:1			
Hydraulic system				
Pump Displacement—Steering	11.9 cu cm (0.73 cu in.)			
Pump Displacement—Implement	23 cu cm (1.40 cu in.)			
Steering	25.7 L/min. (6.8 gpm)			
Implement	43.1 L/min. (11.4 gpm)			
Pump Output Hitch + steering, L / Min	68.8 L/min. (18.2 gpm)			
Rockshaft & SCV				
Rockshaft Make	JD			
SCV make	Eaton			
Rock shaft pressure, bar	195 ± 5			
Controls	Draft & Position			
Rate of drop	Available			
Hitches				
Lift capacity at hitch points, Kg	1800 @hitch Ball			
Lift capacity at 24" behind hitch balls, Kg	1448			
Steering system				
Steering Type	Hydrostatic			
Steering column - OOS and Cab (SyncShuttle)	Standard, Non-Collapsible, and Non-tilt able			
Steering column - OOS and Cab (PowrReverser™)	Standard, Non-Collapsible and with Tilt option			
Electrical				
Battery for OOS				
Battery voltage	12 Volt			
Battery Cold Cranking Amps	800 CCA			

Continued on next page

NM61126,000051A -19-29SEP17-2/3

Tractor Model	5045E	5055E	5065E	5075E
Ampere Rating	85 Ah			
Alternator	70 Amp			
Battery for Cab				
Battery voltage	12 Volt			
Battery Cold Cranking Amps	770 CCA			
Ampere Rating	— Ah			
Alternator	110 Amp			
Starter - All	12 v , 2.5 kw			

PowrReverser is a trademark of Deere & Company

NM61126,000051A -19-29SEP17-3/3

Drain and Refill Capacities

NOTE: (Specifications and design subject to change without notice.)

Drain and Refill Capacities	
Fuel Tank	Open Operator's Station—68 ± 3 L (18 ± 0.8 gal) Cab—82 ± 4 L (21.6 ± 1.06 gal)
Cooling System	9.5 L (10 qt)
Crankcase with Filter	8.5 L (9.0 qt.)
Transmission Hydraulic System	39 L (10.30 gal)
Mechanical Front Wheel Drive (MFWD) Axle - DANA	
Differential Housing	4.5 L (1.18 gal)
Wheel Hub (Each)	0.8 L (0.21 gal)
Mechanical Front Wheel Drive (MFWD) Axle - Carraro	
Differential Housing	3.9 L (1.03 gal)
Epicyclic Reduction Gear Oil Quantity (each side)	0.6 L (0.15 gal)

VP52664,0000530 -19-13DEC17-1/1

Machine Dimension

NOTE: (Specifications and design subject to change without notice.)

Overall Dimension				
	5045E	5055E	5065E	5075E
Wheelbase, mm	2050			
Front Tread Range, mm	1447-2082			
Rear Tread Range, mm	1417 - 1821			
Turning Radius with Brake, mm (2WD)	3100			
Turning Radius with Brake, mm (4WD)	3940			
Turning Radius with Brake, mm (4WD) (Carraro Axle)	3150 mm			
Turning Radius without Brake, mm (2WD)	3500 mm			
Turning Radius without Brake, mm (4WD)	4650 mm			
Turning Radius without Brake, mm (4WD) (Carraro Axle)	3900 mm			

VP52664,000052F -19-12DEC17-1/1

Permissible Load Specifications

IMPORTANT: Maximum permissible travel is 8 km/h (5 mph). Maximum front wheel tread is 1.80 m (71 in.).

Permissible Load Specifications	
Maximum Permissible Static Vertical Load	
Drawbar Fully Extended (PTO)	760 kg (1675 lb)
Drawbar Short Position	1120 kg (2470 lb)
Maximum Permissible Axle Loads—2 Wheel Drive, No Loader	
Front Tires: 7.50-16 6PR	1500 kg (3300 lb)
Front Tires: 11L-15 8PR	2650 kg (5844 lb)
Front Tires: 27/12LL-15 6PR	2340 kg (5160 lb)
Maximum Permissible Axle Loads—2 Wheel Drive, with Loader	
Front Tires: 7.50-16 6PR	NA
Front Tires: 11L-15 8PR	3210 kg (7050 lb)
Front Tires: 27/12LL-15 6PR	NA
Maximum Permissible Axle Loads—2 Wheel Drive and Mechanical Front Wheel Drive	
Rear Tires: 14.9-28 6PR R1	3230 kg (7120 lb)
Rear Tires: 16.9-28 6PR R1	3680 kg (8100 lb)
Rear Tires: 16.9-24 6PR R4	N/A
Rear Tires: 21.5L-16.1 6PR R3	2876 kg (6340 lb)
Maximum Permissible Mechanical Front Wheel Drive Axle Loads—WITHOUT Loader	
Front Tires: 9.5-16 6PR R3	1602 kg (3534 lb)
Front Tires: 9.5-24 6PR R1	1880 kg (4140 lb)
Front Tires: 12.5/80-18 10PR	1260 kg (2760 lb)
Maximum Permissible Mechanical Front Wheel Drive Axle Loads—WITH Loader	
Front Tires: 9.5-16 6PR R3	N/A
Front Tires: 9.5-24 6PR R1	2817 kg (6210 lb)
Front Tires: 12.5/80-18 10PR	N/A

SD74272,00004F7 -19-26MAR13-1/1

Ground Speed Estimates — PowrReverser™ Transmission

NOTE: Ground Speed (km/h) at 2100 rpm engine speed.

Gear	Rear tire size : 16.9 x 28 (R 671 mm)
	Speed - km/h (mph)
A1	1.5 (0.9)
A2	2.1 (1.3)
A3	2.9 (1.8)
A4	3.9 (2.4)
B1	4.5 (2.7)
B2	6.2 (3.8)
B3	8.3 (5.1)
B4	11.0 (6.8)
C1	13.1 (8.1)
C2	17.8 (11.0)
C3	23.9 (14.8)
C4	31.8 (19.7)
Rev A1	1.7 (1.0)
Rev A2	2.3 (1.4)
Rev A3	3.2 (1.9)
Rev A4	4.2 (2.6)
Rev B1	4.9 (3.0)
Rev B2	6.7 (4.1)
Rev B3	9.1 (5.6)
Rev B4	12.0 (7.4)
Rev C1	14.3 (8.8)
Rev C2	19.3 (11.9)
Rev C3	26.2 (16.2)
Rev C4	34.7 (21.5)

NM61126,0000508 -19-23AUG17-1/1

Ground Speed Estimates — Sync Shuttle Transmission

NOTE: Ground Speed (km/h) at 2100 rpm engine speed.

Gear	Rear tire size : 16.9-28 (R 671 mm)
	Speed - km/h (mph)
A1	2.3 (1.4)
A2	3.1 (1.9)
A3	4.3 (2.6)
B1	5.8 (3.6)
B2	7.9 (4.9)
B3	10.9 (6.7)
C1	14.9 (9.2)
C2	20.3 (12.6)
C3	27.9 (17.3)
A-R	3.4 (2.1)
B-R	8.6 (5.3)
C-R	22.1 (13.7)

NM61126,0000509 -19-23AUG17-1/1

Correction Factors For Other Tire Sizes

To calculate ground speeds for tractors equipped with rear tires other than 16.9-28 (Rolling circumference: 171.3 inches), R1 tires, multiply the ground speeds shown for the 16.9-28 (171.3 inches), R1 tires from above chart with correction factor.

Correction factor is calculated by: Rolling radius or circumference of new tire / Rolling radius of tire for which ground speeds are known.

Example: Correction factor for 14.9-28 (Rolling circumference: 162.9 inches) with respect to 16.9-28 (171.3 inches) = 162.9/171.3 inches.

Example: Ground speed of 14.9-28 (Rolling circumference: 162.9 inches) at B-2, 2100 engine RPM, 6.2 km/h * (162.9/171.3) = 5.8 km/h (3.6 mph).

NOTE: Speed and correction factor information is based on rolling circumference information which vary with tire manufacturer.

Tire size	Ground Speed Correction Factor
13.6-28	0.89
14.9-28	0.95
16.9-28	1.00
16.9-24	0.89
21.5L-16	0.69
22.5LL-16.1	0.73

NM61126,000050A -19-23AUG17-1/1

Metric Bolt and Screw Torque Values

TS1742 —UN—31MAY18

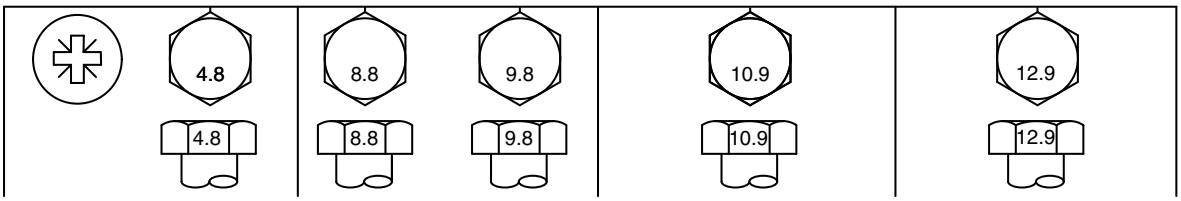

Bolt or Screw Size	Class 4.8				Class 8.8 or 9.8				Class 10.9				Class 12.9			
	Hex Head[a]		Flange Head[b]		Hex Head[a]		Flange Head[b]		Hex Head[a]		Flange Head[b]		Hex Head[a]		Flange Head[b]	
	N·m	lb·in	N·m	lb·in	N·m	lb·in	N·m	lb·in	N·m	lb·in	N·m	lb·in	N·m	lb·in	N·m	lb·in
M6	3.6	31.9	3.9	34.5	6.7	59.3	7.3	64.6	9.8	86.7	10.8	95.6	11.5	102	12.6	112
									N·m	lb·ft	N·m	lb·ft	N·m	lb·ft	N·m	lb·ft
M8	8.6	76.1	9.4	83.2	16.2	143	17.6	156	23.8	17.6	25.9	19.1	27.8	20.5	30.3	22.3
			N·m	lb·ft	N·m	lb·ft	N·m	lb·ft								
M10	16.9	150	18.4	13.6	31.9	23.5	34.7	25.6	46.8	34.5	51	37.6	55	40.6	60	44.3
	N·m	lb·ft														
M12	—	—	—	—	55	40.6	61	45	81	59.7	89	65.6	95	70.1	105	77.4
M14	—	—	—	—	87	64.2	96	70.8	128	94.4	141	104	150	111	165	122
M16	—	—	—	—	135	99.6	149	110	198	146	219	162	232	171	257	190
M18	—	—	—	—	193	142	214	158	275	203	304	224	322	245	356	263
M20	—	—	—	—	272	201	301	222	387	285	428	316	453	334	501	370
M22	—	—	—	—	365	263	405	299	520	384	576	425	608	448	674	497
M24	—	—	—	—	468	345	518	382	666	491	738	544	780	575	864	637
M27	—	—	—	—	683	504	758	559	973	718	1080	797	1139	840	1263	932
M30	—	—	—	—	932	687	1029	759	1327	979	1466	1081	1553	1145	1715	1265
M33	—	—	—	—	1258	928	1398	1031	1788	1319	1986	1465	2092	1543	2324	1714
M36	—	—	—	—	1617	1193	1789	1319	2303	1699	2548	1879	2695	1988	2982	2199

The nominal torque values listed are for general use only with the assumed wrenching accuracy of 20%, such as a manual torque wrench.
DO NOT use these values if a different torque value or tightening procedure is given for a specific application.
For lock nuts, for stainless steel fasteners, or for nuts on U-bolts, see the tightening instructions for the specific application.

Replace fasteners with the same or higher property class. If higher property class fasteners are used, tighten these to the strength of the original.

- Make sure that fastener threads are clean.
- Apply a thin coat of Hy-Gard™ or equivalent oil under the head and on the threads of the fastener, as shown in the following image.
- Be conservative with the amount of oil to reduce the potential for hydraulic lockup in blind holes due to excessive oil.
- Properly start thread engagement.

TS1741 —UN—22MAY18

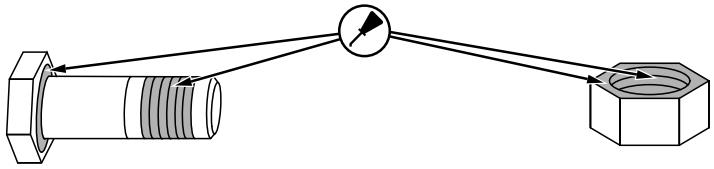

[a]Hex head column values are valid for ISO 4014 and ISO 4017 hex head, ISO 4162 hex socket head, and ISO 4032 hex nuts.
[b]Hex flange column values are valid for ASME B18.2.3.9M, ISO 4161, or EN 1665 hex flange products.

DX,TORQ2 -19-30MAY18-1/1

Unified Inch Bolt and Screw Torque Values

TS1671 —UN—01MAY03

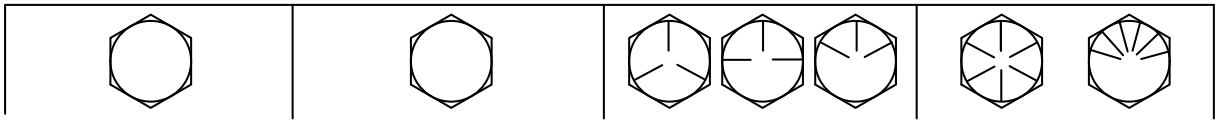

Bolt or Screw Size	SAE Grade 1[a]				SAE Grade 2[b]				SAE Grade 5, 5.1 or 5.2				SAE Grade 8 or 8.2			
	Hex Head[c]		Flange Head[d]		Hex Head[c]		Flange Head[d]		Hex Head[c]		Flange Head[d]		Hex Head[c]		Flange Head[d]	
	N·m	lb·in	N·m	lb·in	N·m	lb·in	N·m	lb·in	N·m	lb·in	N·m	lb·in	N·m	lb·in	N·m	lb·in
1/4	3.1	27.3	3.2	28.4	5.1	45.5	5.3	47.3	7.9	70.2	8.3	73.1	11.2	99.2	11.6	103
													N·m	lb·ft	N·m	lb·ft
5/16	6.1	54.1	6.5	57.7	10.2	90.2	10.9	96.2	15.7	139	16.8	149	22.2	16.4	23.7	17.5
									N·m	lb·ft	N·m	lb·ft				
3/8	10.5	93.6	11.5	102	17.6	156	19.2	170	27.3	20.1	29.7	21.9	38.5	28.4	41.9	30.9
					N·m	lb·ft	N·m	lb·ft								
7/16	16.7	148	18.4	163	27.8	20.5	30.6	22.6	43	31.7	47.3	34.9	60.6	44.7	66.8	49.3
	N·m	lb·ft	N·m	lb·ft												
1/2	25.9	19.1	28.2	20.8	43.1	31.8	47	34.7	66.6	49.1	72.8	53.7	94	69.3	103	75.8
9/16	36.7	27.1	40.5	29.9	61.1	45.1	67.5	49.8	94.6	69.8	104	77	134	98.5	148	109
5/8	51	37.6	55.9	41.2	85	62.7	93.1	68.7	131	96.9	144	106	186	137	203	150
3/4	89.5	66	98	72.3	149	110	164	121	230	170	252	186	325	240	357	263
7/8	144	106	157	116	144	106	157	116	370	273	405	299	522	385	572	422
1	216	159	236	174	216	159	236	174	556	410	609	449	785	579	860	634
1-1/8	305	225	335	247	305	225	335	247	685	505	751	554	1110	819	1218	898
1-1/4	427	315	469	346	427	315	469	346	957	706	1051	775	1552	1145	1703	1256
1-3/8	564	416	618	456	564	416	618	456	1264	932	1386	1022	2050	1512	2248	1658
1-1/2	743	548	815	601	743	548	815	601	1665	1228	1826	1347	2699	1991	2962	2185

The nominal torque values listed are for general use only with the assumed wrenching accuracy of 20%, such as a manual torque wrench.
DO NOT use these values if a different torque value or tightening procedure is given for a specific application.
For lock nuts, for stainless steel fasteners, or for nuts on U-bolts, see the tightening instructions for the specific application.

Replace fasteners with the same or higher property class. If higher property class fasteners are used, tighten these to the strength of the original.

- Make sure that fastener threads are clean.
- Apply a thin coat of Hy-Gard™ or equivalent oil under the head and on the threads of the fastener, as shown in the following image.
- Be conservative with the amount of oil to reduce the potential for hydraulic lockup in blind holes due to excessive oil.
- Properly start thread engagement.

TS1741 —UN—22MAY18

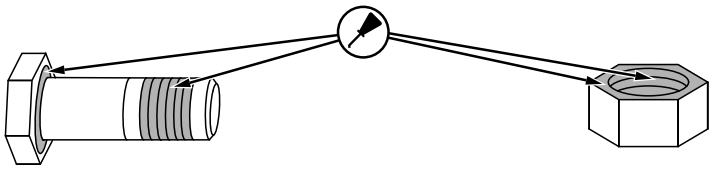

[a]Grade 1 applies for hex cap screws over 6 in (152 mm) long, and for all other types of bolts and screws of any length.
[b]Grade 2 applies for hex cap screws (not hex bolts) up to 6 in (152 mm) long.
[c]Hex head column values are valid for ISO 4014 and ISO 4017 hex head, ISO 4162 hex socket head, and ISO 4032 hex nuts.
[d]Hex flange column values are valid for ASME B18.2.3.9M, ISO 4161, or EN 1665 hex flange products.

DX,TORQ1 -19-30MAY18-1/1

Emissions Control System Certification Label

WARNING: Statutes providing severe penalties for tampering with emissions controls may apply at the user's location.

The emissions warranty described below applies only to those engines marketed by John Deere that have been certified by the United States Environmental Protection Agency (EPA) and/or California Air Resources Board (CARB); and used in the United States in non-road mobile (self-propelled or portable/transportable[1]) equipment. The presence of an emissions label like the one shown signifies that the engine has been certified with the EPA and/or CARB. The EPA and CARB warranties only apply to new engines having the certification label affixed to the engine and sold as stated above in the geographic areas governed by the regulating agencies.

NOTE: The hp/kW rating on the engine emissions certification label specifies the gross engine hp/kW, which is flywheel power without fan. In most applications this will not be the same rating as the advertised vehicle hp/kW rating.

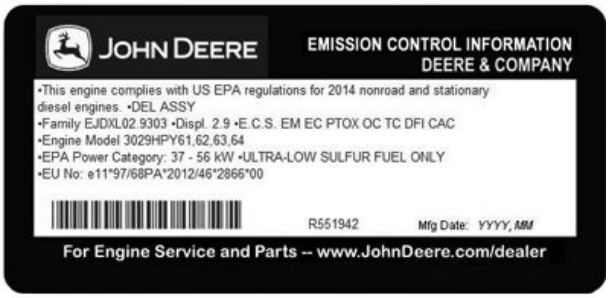

PY18427 —UN—20JUN14

Sample Emission Label

[1]*Equipment moved at least once every 12 months.*

SD74272,00004FA -19-18JUN14-1/1

CARB Non-road Emissions Control Warranty Statement—Compression Ignition

Emissions Control Warranty Statement 2019 through 2021

DXLOGOV1 —UN—28APR09

JOHN DEERE

CALIFORNIA EMISSIONS CONTROL WARRANTY STATEMENT
YOUR WARRANTY RIGHTS AND OBLIGATIONS

To determine if the John Deere engine qualifies for the additional warranties set forth below, look for the “Emission Control Information” label located on the engine. If the engine is operated in the United States or Canada and the engine label states: “This engine complies with US EPA regulations for nonroad and stationary diesel engines”, or “This engine complies with US EPA regulations for stationary emergency diesel engines”, refer to the “U.S. and Canada Emission Control Warranty Statement.” If the engine is operated in California, and the engine label states: “This engine complies with US EPA and CARB regulations for nonroad diesel engines” also refer to the “California Emissions Control Warranty Statement.”

Warranties stated on this certificate refer only to emissions-related parts and components of your engine. The complete engine warranty, less emission-related parts and components, is provided separately. If you have any questions about your warranty rights and responsibilities, you should contact John Deere at 1-319-292-5400.

CALIFORNIA EMISSIONS CONTROL WARRANTY STATEMENT:

The California Air Resources Board (CARB) is pleased to explain the emission-control system warranty on 2019 through 2021 off-road diesel engines. In California, new off-road engines must be designed, built and equipped to meet the State’s stringent anti-smog standards. John Deere must warrant the emission control system on your engine for the periods of time listed below provided there has been no abuse, neglect or improper maintenance of your engine.

Your emission control system may include parts such as the fuel injection system and the air induction system. Also included may be hoses, belts, connectors and other emission-related assemblies.

John Deere warrants to the ultimate purchaser and each subsequent purchaser that this off-road diesel engine was designed, built, and equipped so as to conform at the time of sale with all applicable regulations adopted by CARB and is free from defects in materials and workmanship which would cause the failure of a warranted part to be identical in all material respects to the part as described in John Deere's application for certification for a period of five years from the date the engine is delivered to an ultimate purchaser or 3,000 hours of operation, whichever occurs first for all engines rated at 19 kW and greater. In the absence of a device to measure hours of use, the engine shall be warranted for a period of five years.

EMISSIONS WARRANTY EXCLUSIONS:

John Deere may deny warranty claims for failures caused by the use of an add-on or modified part which has not been exempted by the CARB. A modified part is an aftermarket part intended to replace an original emission-related part which is not functionally identical in all respects and which in any way affects emissions. An add-on part is any aftermarket part which is not a modified part or a replacement part.

In no event will John Deere, any authorized engine distributor, dealer, or repair facility, or any company affiliated with John Deere be liable for incidental or consequential damage.

Continued on next page

DX,EMISSIONS,CARB -19-26AUG20-1/8

JOHN DEERE'S WARRANTY RESPONSIBILITY:

Where a warrantable condition exists, John Deere will repair or replace, as it elects, your off-road diesel engine at no cost to you, including diagnosis, parts or labor. Warranty coverage is subject to the limitations and exclusions set forth herein. The off-road diesel engine is warranted for a period of five years from the date the engine is delivered to an ultimate purchaser or 3,000 hours of operation, whichever occurs first. The following are emissions-related parts:

Air Induction System

- Intake manifold
- Turbocharger
- Charge air cooler

Fuel Metering system

- Fuel injection system

Exhaust Gas Recirculation

- EGR valve

Catalyst or Thermal Reactor Systems

- Catalytic converter
- Exhaust manifold

Emission control labels

Particulate Controls

- Any device used to capture particulate emissions
- Any device used in the regeneration of the capturing system
- Enclosures and manifolding
- Smoke Puff Limiters

Positive Crankcase Ventilation (PCV) System

- PCV valve
- Oil filler cap

Advanced Oxides of Nitrogen (NOx) Controls

- NOx absorbers and catalysts

SCR systems and urea containers/dispensing systems

Miscellaneous Items used in Above Systems

- Electronic control units, sensors, actuators, wiring harnesses, hoses, connectors, clamps, fittings, gasket, mounting hardware

Any warranted emissions-related part scheduled for replacement as required maintenance is warranted by John Deere for the period of time prior to the first scheduled replacement point for the part. Any warranted emissions-related part not scheduled for replacement as required maintenance or scheduled only for regular inspection is warranted by John Deere for the stated warranty period.

OWNER'S WARRANTY RESPONSIBILITIES:

As the off-road diesel engine owner you are responsible for the performance of the required maintenance listed in your Operator's Manual. John Deere recommends that the owner retain all receipts covering maintenance on the off-road diesel engine, but John Deere cannot deny warranty solely for the lack of receipts or for the owner's failure to ensure the performance of all scheduled maintenance. However, as the off-road diesel engine owner, you should be aware that John Deere may deny you warranty coverage if your off-road diesel engine or a part has failed due to abuse, neglect, improper maintenance or unapproved modifications.

The off-road diesel engine is designed to operate on diesel fuel as specified in the Fuels, Lubricants and Coolants section in the Operators Manual. Use of any other fuel may result in the engine no longer operating in compliance with applicable emissions requirements.

The owner is responsible for initiating the warranty process, and should present the machine to the nearest authorized John Deere dealer as soon as a problem is suspected. The warranty repairs should be completed by the authorized John Deere dealer as quickly as possible.

Emissions regulations require the customer to bring the unit to an authorized servicing dealer when warranty service is required. As a result, John Deere is NOT liable for travel or mileage on emissions warranty service calls.

Emission_CI_CARB (01Feb17)

Continued on next page

DX,EMISSIONS,CARB -19-26AUG20-2/8

Emissions Control Warranty Statement 2019 through 2021

DXLOGOV1 —UN—28APR09

JOHN DEERE

CALIFORNIA EMISSIONS CONTROL WARRANTY STATEMENT
YOUR WARRANTY RIGHTS AND OBLIGATIONS

To determine if the John Deere engine qualifies for the additional warranties set forth below, look for the “Emission Control Information” label located on the engine. If the engine is operated in the United States or Canada and the engine label states: “This engine complies with US EPA regulations for nonroad and stationary diesel engines”, or “This engine complies with US EPA regulations for stationary emergency diesel engines”, refer to the “U.S. and Canada Emission Control Warranty Statement.” If the engine is operated in California, and the engine label states: “This engine complies with US EPA and CARB regulations for nonroad diesel engines” also refer to the “California Emissions Control Warranty Statement.”

Warranties stated on this certificate refer only to emissions-related parts and components of your engine. The complete engine warranty, less emission-related parts and components, is provided separately. If you have any questions about your warranty rights and responsibilities, you should contact John Deere at 1-319-292-5400.

CALIFORNIA EMISSIONS CONTROL WARRANTY STATEMENT:

The California Air Resources Board (CARB) is pleased to explain the emission-control system warranty on 2019 through 2021 off-road diesel engines. In California, new off-road engines must be designed, built and equipped to meet the State’s stringent anti-smog standards. John Deere must warrant the emission control system on your engine for the periods of time listed below provided there has been no abuse, neglect or improper maintenance of your engine.

Your emission control system may include parts such as the fuel injection system and the air induction system. Also included may be hoses, belts, connectors and other emission-related assemblies.

John Deere warrants to the ultimate purchaser and each subsequent purchaser that this off-road diesel engine was designed, built, and equipped so as to conform at the time of sale with all applicable regulations adopted by CARB and is free from defects in materials and workmanship which would cause the failure of a warranted part to be identical in all material respects to the part as described in John Deere's application for certification for a period of five years from the date the engine is delivered to an ultimate purchaser or 3,000 hours of operation, whichever occurs first for all engines rated at 19 kW and greater. In the absence of a device to measure hours of use, the engine shall be warranted for a period of five years.

EMISSIONS WARRANTY EXCLUSIONS:

John Deere may deny warranty claims for failures caused by the use of an add-on or modified part which has not been exempted by the CARB. A modified part is an aftermarket part intended to replace an original emission-related part which is not functionally identical in all respects and which in any way affects emissions. An add-on part is any aftermarket part which is not a modified part or a replacement part.

In no event will John Deere, any authorized engine distributor, dealer, or repair facility, or any company affiliated with John Deere be liable for incidental or consequential damage.

RG29280 —UN—02FEB17

Continued on next page

DX,EMISSIONS,CARB -19-26AUG20-3/8

JOHN DEERE'S WARRANTY RESPONSIBILITY:

Where a warrantable condition exists, John Deere will repair or replace, as it elects, your off-road diesel engine at no cost to you, including diagnosis, parts or labor. Warranty coverage is subject to the limitations and exclusions set forth herein. The off-road diesel engine is warranted for a period of five years from the date the engine is delivered to an ultimate purchaser or 3,000 hours of operation, whichever occurs first. The following are emissions-related parts:

Air Induction System

- Intake manifold
- Turbocharger
- Charge air cooler

Fuel Metering system

- Fuel injection system

Exhaust Gas Recirculation

- EGR valve

Catalyst or Thermal Reactor Systems

- Catalytic converter
- Exhaust manifold

Emission control labels

Particulate Controls

- Any device used to capture particulate emissions
- Any device used in the regeneration of the capturing system
- Enclosures and manifolding
- Smoke Puff Limiters

Positive Crankcase Ventilation (PCV) System

- PCV valve
- Oil filler cap

Advanced Oxides of Nitrogen (NOx) Controls

- NOx absorbers and catalysts

SCR systems and urea containers/dispensing systems

Miscellaneous Items used in Above Systems

- Electronic control units, sensors, actuators, wiring harnesses, hoses, connectors, clamps, fittings, gasket, mounting hardware

Any warranted emissions-related part scheduled for replacement as required maintenance is warranted by John Deere for the period of time prior to the first scheduled replacement point for the part. Any warranted emissions-related part not scheduled for replacement as required maintenance or scheduled only for regular inspection is warranted by John Deere for the stated warranty period.

OWNER'S WARRANTY RESPONSIBILITIES:

As the off-road diesel engine owner you are responsible for the performance of the required maintenance listed in your Operator's Manual. John Deere recommends that the owner retain all receipts covering maintenance on the off-road diesel engine, but John Deere cannot deny warranty solely for the lack of receipts or for the owner's failure to ensure the performance of all scheduled maintenance. However, as the off-road diesel engine owner, you should be aware that John Deere may deny you warranty coverage if your off-road diesel engine or a part has failed due to abuse, neglect, improper maintenance or unapproved modifications.

The off-road diesel engine is designed to operate on diesel fuel as specified in the Fuels, Lubricants and Coolants section in the Operators Manual. Use of any other fuel may result in the engine no longer operating in compliance with applicable emissions requirements.

The owner is responsible for initiating the warranty process, and should present the machine to the nearest authorized John Deere dealer as soon as a problem is suspected. The warranty repairs should be completed by the authorized John Deere dealer as quickly as possible.

Emissions regulations require the customer to bring the unit to an authorized servicing dealer when warranty service is required. As a result, John Deere is NOT liable for travel or mileage on emissions warranty service calls.

Emission_CI_CARB (01Feb17)

RG29281 —UN—27FEB17

Continued on next page

DX,EMISSIONS,CARB -19-26AUG20-4/8

Emissions Control Warranty Statement 2022 through 2024

DXLOGOV1 —UN—28APR09

JOHN DEERE

CALIFORNIA EMISSIONS CONTROL WARRANTY STATEMENT
YOUR WARRANTY RIGHTS AND OBLIGATIONS

To determine if the John Deere engine qualifies for the additional warranties set forth below, look for the “Emission Control Information” label located on the engine. If the engine is operated in the United States or Canada and the engine label states: “This engine complies with US EPA regulations for nonroad and stationary diesel engines”, or “This engine complies with US EPA regulations for stationary emergency diesel engines”, refer to the “U.S. and Canada Emission Control Warranty Statement.” If the engine is operated in California, and the engine label states: “This engine complies with US EPA and California regulations for nonroad/off-road diesel engines” also refer to the “California Emissions Control Warranty Statement.”

Warranties stated on this certificate refer only to emissions-related parts and components of your engine. The complete engine warranty, less emission-related parts and components, is provided separately. If you have any questions about your warranty rights and responsibilities, you should contact John Deere at 1-319-292-5400.

CALIFORNIA EMISSIONS CONTROL WARRANTY STATEMENT:

The California Air Resources Board (CARB) is pleased to explain the emission-control system warranty on 2022 through 2024 off-road diesel engines. In California, new off-road engines must be designed, built and equipped to meet the State’s stringent anti-smog standards. John Deere must warrant the emission control system on your engine for the periods of time listed below provided there has been no abuse, neglect or improper maintenance of your engine.

Your emission control system may include parts such as the fuel injection system and the air induction system. Also included may be hoses, belts, connectors and other emission-related assemblies.

John Deere warrants to the ultimate purchaser and each subsequent purchaser that this off-road diesel engine was designed, built, and equipped so as to conform at the time of sale with all applicable regulations adopted by CARB. John Deere warrants that this engine is free from defects in materials and workmanship which would cause the failure of emissions warrantied parts to be identical in all material respects to the part as described in John Deere's application for certification for a period of five years from the date the engine is delivered to an ultimate purchaser or 3,000 hours of operation, whichever occurs first. This applies to all engines rated at 19 kW and greater. In the absence of a device to measure hours of use, the engine shall be warranted for a period of five years.

EMISSIONS WARRANTY EXCLUSIONS:

John Deere may deny warranty claims for failures caused by the use of an add-on or modified part which has not been exempted by the CARB. A modified part is an aftermarket part intended to replace an original emission-related part which is not functionally identical in all respects and which in any way affects emissions. An add-on part is any aftermarket part which is not a modified part or a replacement part.

In no event will John Deere, any authorized engine distributor, dealer, or repair facility, or any company affiliated with John Deere be liable for incidental or consequential damage.

Continued on next page

DX,EMISSIONS,CARB -19-26AUG20-5/8

JOHN DEERE'S WARRANTY RESPONSIBILITY:

Where a warrantable condition exists, John Deere will repair or replace, as it elects, your off-road diesel engine at no cost to you, including diagnosis, parts or labor. Warranty coverage is subject to the limitations and exclusions set forth herein. The off-road diesel engine is warranted for a period of five years from the date the engine is delivered to an ultimate purchaser or 3,000 hours of operation, whichever occurs first. The following are emissions-related parts:

Air Induction System

- Intake manifold
- Turbocharger
- Charge air cooler

Fuel Metering system

- Fuel injection system

Exhaust Gas Recirculation

- EGR valve

Catalyst or Thermal Reactor Systems

- Catalytic converter
- Exhaust manifold

Emission control labels

Particulate Controls

- Any device used to capture particulate emissions
- Any device used in the regeneration of the capturing system
- Enclosures and manifolding
- Smoke Puff Limiters

Positive Crankcase Ventilation (PCV) System

- PCV valve
- Oil filler cap

Advanced Oxides of Nitrogen (NOx) Controls

- NOx absorbers and catalysts

SCR systems and urea containers/dispensing systems

Miscellaneous Items used in Above Systems

- Electronic control units, sensors, actuators, wiring harnesses, hoses, connectors, clamps, fittings, gasket, mounting hardware

Any warranted emissions-related part scheduled for replacement as required maintenance is warranted by John Deere for the period of time prior to the first scheduled replacement point for the part. Any warranted emissions-related part not scheduled for replacement as required maintenance or scheduled only for regular inspection is warranted by John Deere for the stated warranty period.

OWNER'S WARRANTY RESPONSIBILITIES:

As the off-road diesel engine owner you are responsible for the performance of the required maintenance listed in your Operator's Manual. John Deere recommends that the owner retain all receipts covering maintenance on the off-road diesel engine, but John Deere cannot deny warranty solely for the lack of receipts or for the owner's failure to ensure the performance of all scheduled maintenance. However, as the off-road diesel engine owner, you should be aware that John Deere may deny you warranty coverage if your off-road diesel engine or a part has failed due to abuse, neglect, improper maintenance or unapproved modifications.

The off-road diesel engine is designed to operate on diesel fuel as specified in the Fuels, Lubricants and Coolants section in the Operators Manual. Use of any other fuel may result in the engine no longer operating in compliance with applicable emissions requirements.

The owner is responsible for initiating the warranty process, and should present the machine to the nearest authorized John Deere dealer as soon as a problem is suspected. The warranty repairs should be completed by the authorized John Deere dealer as quickly as possible.

Emissions regulations require the customer to bring the unit to an authorized servicing dealer when warranty service is required. As a result, John Deere is NOT liable for travel or mileage on emissions warranty service calls.

Emission_CI_CARB (14Apr20)

Continued on next page

DX,EMISSIONS,CARB -19-26AUG20-6/8

Emissions Control Warranty Statement 2022 through 2024

DXLOGOV1 —UN—28APR09

JOHN DEERE

CALIFORNIA EMISSIONS CONTROL WARRANTY STATEMENT
YOUR WARRANTY RIGHTS AND OBLIGATIONS

To determine if the John Deere engine qualifies for the additional warranties set forth below, look for the "Emission Control Information" label located on the engine. If the engine is operated in the United States or Canada and the engine label states: "This engine complies with US EPA regulations for nonroad and stationary diesel engines", or "This engine complies with US EPA regulations for stationary emergency diesel engines", refer to the "U.S. and Canada Emission Control Warranty Statement." If the engine is operated in California, and the engine label states: "This engine complies with US EPA and California regulations for nonroad/off-road diesel engines" also refer to the "California Emissions Control Warranty Statement."

Warranties stated on this certificate refer only to emissions-related parts and components of your engine. The complete engine warranty, less emission-related parts and components, is provided separately. If you have any questions about your warranty rights and responsibilities, you should contact John Deere at 1-319-292-5400.

CALIFORNIA EMISSIONS CONTROL WARRANTY STATEMENT:

The California Air Resources Board (CARB) is pleased to explain the emission-control system warranty on 2022 through 2024 off-road diesel engines. In California, new off-road engines must be designed, built and equipped to meet the State's stringent anti-smog standards. John Deere must warrant the emission control system on your engine for the periods of time listed below provided there has been no abuse, neglect or improper maintenance of your engine.

Your emission control system may include parts such as the fuel injection system and the air induction system. Also included may be hoses, belts, connectors and other emission-related assemblies.

John Deere warrants to the ultimate purchaser and each subsequent purchaser that this off-road diesel engine was designed, built, and equipped so as to conform at the time of sale with all applicable regulations adopted by CARB. John Deere warrants that this engine is free from defects in materials and workmanship which would cause the failure of emissions warrantied parts to be identical in all material respects to the part as described in John Deere's application for certification for a period of five years from the date the engine is delivered to an ultimate purchaser or 3,000 hours of operation, whichever occurs first. This applies to all engines rated at 19 kW and greater. In the absence of a device to measure hours of use, the engine shall be warranted for a period of five years.

EMISSIONS WARRANTY EXCLUSIONS:

John Deere may deny warranty claims for failures caused by the use of an add-on or modified part which has not been exempted by the CARB. A modified part is an aftermarket part intended to replace an original emission-related part which is not functionally identical in all respects and which in any way affects emissions. An add-on part is any aftermarket part which is not a modified part or a replacement part.

In no event will John Deere, any authorized engine distributor, dealer, or repair facility, or any company affiliated with John Deere be liable for incidental or consequential damage.

RG32758 —UN—19AUG20

Continued on next page

DX,EMISSIONS,CARB -19-26AUG20-7/8

JOHN DEERE'S WARRANTY RESPONSIBILITY:

Where a warrantable condition exists, John Deere will repair or replace, as it elects, your off-road diesel engine at no cost to you, including diagnosis, parts or labor. Warranty coverage is subject to the limitations and exclusions set forth herein. The off-road diesel engine is warranted for a period of five years from the date the engine is delivered to an ultimate purchaser or 3,000 hours of operation, whichever occurs first. The following are emissions-related parts:

Air Induction System

- Intake manifold
- Turbocharger
- Charge air cooler

Fuel Metering system

- Fuel injection system

Exhaust Gas Recirculation

- EGR valve

Catalyst or Thermal Reactor Systems

- Catalytic converter
- Exhaust manifold

Emission control labels

Particulate Controls

- Any device used to capture particulate emissions
- Any device used in the regeneration of the capturing system
- Enclosures and manifolding
- Smoke Puff Limiters

Positive Crankcase Ventilation (PCV) System

- PCV valve
- Oil filler cap

Advanced Oxides of Nitrogen (NOx) Controls

- NOx absorbers and catalysts

SCR systems and urea containers/dispensing systems

Miscellaneous Items used in Above Systems

- Electronic control units, sensors, actuators, wiring harnesses, hoses, connectors, clamps, fittings, gasket, mounting hardware

Any warranted emissions-related part scheduled for replacement as required maintenance is warranted by John Deere for the period of time prior to the first scheduled replacement point for the part. Any warranted emissions-related part not scheduled for replacement as required maintenance or scheduled only for regular inspection is warranted by John Deere for the stated warranty period.

OWNER'S WARRANTY RESPONSIBILITIES:

As the off-road diesel engine owner you are responsible for the performance of the required maintenance listed in your Operator's Manual. John Deere recommends that the owner retain all receipts covering maintenance on the off-road diesel engine, but John Deere cannot deny warranty solely for the lack of receipts or for the owner's failure to ensure the performance of all scheduled maintenance. However, as the off-road diesel engine owner, you should be aware that John Deere may deny you warranty coverage if your off-road diesel engine or a part has failed due to abuse, neglect, improper maintenance or unapproved modifications.

The off-road diesel engine is designed to operate on diesel fuel as specified in the Fuels, Lubricants and Coolants section in the Operators Manual. Use of any other fuel may result in the engine no longer operating in compliance with applicable emissions requirements.

The owner is responsible for initiating the warranty process, and should present the machine to the nearest authorized John Deere dealer as soon as a problem is suspected. The warranty repairs should be completed by the authorized John Deere dealer as quickly as possible.

Emissions regulations require the customer to bring the unit to an authorized servicing dealer when warranty service is required. As a result, John Deere is NOT liable for travel or mileage on emissions warranty service calls.

Emission_CI_CARB (14Apr20)

RG32759 —UN—19AUG20

DX,EMISSIONS,CARB -19-26AUG20-8/8

EPA Non-road Emissions Control Warranty Statement—Compression Ignition

DXLOGOV1 —UN—28APR09

JOHN DEERE

U.S. AND CANADA EMISSION CONTROL WARRANTY STATEMENT
YOUR WARRANTY RIGHTS AND OBLIGATIONS

To determine if the John Deere engine qualifies for the additional warranties set forth below, look for the "Emissions Control Information" label located on the engine. If the engine is operated in the United States or Canada and the Emissions Control information label states: "This engine complies with US EPA regulations for nonroad and stationary diesel engines", or "This engine conforms to US EPA nonroad compression-ignition regulations", refer to the "U.S. and Canada Emission Control Warranty Statement." If the engine is operated in California, and the label states: "This engine complies with US EPA and CARB regulations for nonroad diesel engines", or "This engine conforms to US EPA and California nonroad compression-ignition emission regulations", also refer to the "California Emission Control Warranty Statement."

Warranties stated on this certificate refer only to emissions-related parts and components of your engine. The complete engine warranty, less emissions-related parts and components, is provided separately. If you have any questions about your warranty rights and responsibilities, you should contact John Deere at 1-319-292-5400.

JOHN DEERE'S WARRANTY RESPONSIBILITY

John Deere warrants to the ultimate purchaser and each subsequent purchaser that this off-road diesel engine including all parts of its emission-control system was designed, built and equipped so as to conform at the time of the sale with Section 213 of the Clean Air Act and is free from defects in materials and workmanship which would cause the engine to fail to conform with applicable US EPA regulations for a period of five years from the date the engine is placed into service or 3,000 hours of operation, whichever first occurs.

Where a warrantable condition exists, John Deere will repair or replace, as it elects, any part or component with a defect in materials or workmanship that would increase the engine's emissions of any regulated pollutant within the stated warranty period at no cost to you, including expenses related to diagnosing and repairing or replacing emission-related parts. Warranty coverage is subject to the limitations and exclusions set forth herein. Emission- related components include engine parts developed to control emissions related to the following:

Air-Induction System
Fuel System
Ignition System
Exhaust Gas Recirculation Systems
Aftertreatment Devices
Crankcase Ventilation Valves
Sensors
Engine Electronic Control Units

EMISSION WARRANTY EXCLUSIONS

John Deere may deny warranty claims for malfunctions or failures caused by:

- Non-performance of maintenance requirements listed in the Operator's Manual
- The use of the engine/equipment in a manner for which it was not designed
- Abuse, neglect, improper maintenance or unapproved modifications or alterations
- Accidents for which it does not have responsibility or by acts of God

The off-road diesel engine is designed to operate on diesel fuel as specified in the Fuels, Lubricants and Coolants section in the Operators Manual. Use of any other fuel can harm the emissions control system of the engine/equipment and is not approved for use.

To the extent permitted by law John Deere is not liable for damage to other engine components caused by a failure of an emission-related part, unless otherwise covered by standard warranty.

THIS WARRANTY IS EXPRESSLY IN LIEU OF ANY OTHER WARRANTIES, EXPRESS OR IMPLIED, INCLUDING ANY WARRANTY OF MERCHANTABILITY OR FITNESS FOR A PARTICULAR PURPOSE. REMEDIES UNDER THIS WARRANTY ARE LIMITED TO THE PROVISIONS OF MATERIAL AND SERVICES AS SPECIFIED HEREIN. WHERE PERMITTED BY LAW, NEITHER JOHN DEERE NOR ANY AUTHORIZED JOHN DEERE ENGINE DISTRIBUTOR, DEALER, OR REPAIR FACILITY OR ANY COMPANY AFFILIATED WITH JOHN DEERE WILL BE LIABLE FOR INCIDENTAL OR CONSEQUENTIAL DAMAGES.

Emission_CI_EPA (18Dec09)

Continued on next page

DX,EMISSIONS,EPA -19-12DEC12-1/2

JOHN DEERE

U.S. AND CANADA EMISSION CONTROL WARRANTY STATEMENT
YOUR WARRANTY RIGHTS AND OBLIGATIONS

To determine if the John Deere engine qualifies for the additional warranties set forth below, look for the "Emissions Control Information" label located on the engine. If the engine is operated in the United States or Canada and the Emissions Control information label states: "This engine complies with US EPA regulations for nonroad and stationary diesel engines", or "This engine conforms to US EPA nonroad compression-ignition regulations", refer to the "U.S. and Canada Emission Control Warranty Statement." If the engine is operated in California, and the label states: "This engine complies with US EPA and CARB regulations for nonroad diesel engines", or "This engine conforms to US EPA and California nonroad compression-ignition emission regulations", also refer to the "California Emission Control Warranty Statement."

Warranties stated on this certificate refer only to emissions-related parts and components of your engine. The complete engine warranty, less emissions-related parts and components, is provided separately. If you have any questions about your warranty rights and responsibilities, you should contact John Deere at 1-319-292-5400.

JOHN DEERE'S WARRANTY RESPONSIBILITY

John Deere warrants to the ultimate purchaser and each subsequent purchaser that this off-road diesel engine including all parts of its emission-control system was designed, built and equipped so as to conform at the time of the sale with Section 213 of the Clean Air Act and is free from defects in materials and workmanship which would cause the engine to fail to conform with applicable US EPA regulations for a period of five years from the date the engine is placed into service or 3,000 hours of operation, whichever first occurs.

Where a warrantable condition exists, John Deere will repair or replace, as it elects, any part or component with a defect in materials or workmanship that would increase the engine's emissions of any regulated pollutant within the stated warranty period at no cost to you, including expenses related to diagnosing and repairing or replacing emission-related parts. Warranty coverage is subject to the limitations and exclusions set forth herein. Emission- related components include engine parts developed to control emissions related to the following:

Air-Induction System
Fuel System
Ignition System
Exhaust Gas Recirculation Systems
Aftertreatment Devices
Crankcase Ventilation Valves
Sensors
Engine Electronic Control Units

EMISSION WARRANTY EXCLUSIONS

John Deere may deny warranty claims for malfunctions or failures caused by:

- Non-performance of maintenance requirements listed in the Operator's Manual
- The use of the engine/equipment in a manner for which it was not designed
- Abuse, neglect, improper maintenance or unapproved modifications or alterations
- Accidents for which it does not have responsibility or by acts of God

The off-road diesel engine is designed to operate on diesel fuel as specified in the Fuels, Lubricants and Coolants section in the Operators Manual. Use of any other fuel can harm the emissions control system of the engine/equipment and is not approved for use.

To the extent permitted by law John Deere is not liable for damage to other engine components caused by a failure of an emission-related part, unless otherwise covered by standard warranty.

THIS WARRANTY IS EXPRESSLY IN LIEU OF ANY OTHER WARRANTIES, EXPRESS OR IMPLIED, INCLUDING ANY WARRANTY OF MERCHANTABILITY OR FITNESS FOR A PARTICULAR PURPOSE. REMEDIES UNDER THIS WARRANTY ARE LIMITED TO THE PROVISIONS OF MATERIAL AND SERVICES AS SPECIFIED HEREIN. WHERE PERMITTED BY LAW, NEITHER JOHN DEERE NOR ANY AUTHORIZED JOHN DEERE ENGINE DISTRIBUTOR, DEALER, OR REPAIR FACILITY OR ANY COMPANY AFFILIATED WITH JOHN DEERE WILL BE LIABLE FOR INCIDENTAL OR CONSEQUENTIAL DAMAGES.

Emission_CI_EPA (18Dec09)

TS1721 —UN—15JUL13

DX,EMISSIONS,EPA -19-12DEC12-2/2

Limited Battery Warranty

NOTE: Applicable in North America only. For complete machine warranty, reference a copy of the John Deere warranty statement. Contact your John Deere dealer to obtain a copy.

To Secure Warranty Service

The purchaser must request warranty service from a John Deere dealer authorized to sell John Deere batteries, and present the battery to the dealer with the top cover plate codes intact.

Free Replacement

Any new battery which becomes unserviceable (not merely discharged) due to defects in material or workmanship within 90 days of purchase will be replaced free of charge. Installation costs will be covered by warranty if (1) the unserviceable battery was installed by a John Deere factory or dealer, (2) failure occurs within 90 days of purchase, and (3) the replacement battery is installed by a John Deere dealer.

Pro Rata Adjustment

Any new battery which becomes unserviceable (not merely discharged) due to defects in material or workmanship more than 90 days after purchase, but before the expiration of the applicable adjustment period, will be replaced upon payment of the battery's current list price less a pro rata credit for unused months of service. The applicable adjustment period is determined from the Warranty Code printed at the top of the battery and chart below. Installation costs are not covered by warranty after 90 days from the date of purchase.

This Warranty Does Not Cover

Breakage of the container, cover, or terminals.

Depreciation or damage caused by lack of reasonable and necessary maintenance or by improper maintenance.

Transportation, mailing, or service call charges for warranty service.

Limitation of Implied Warranties and Purchaser's Remedies

To the extent permitted by law, neither John Deere nor any company affiliated with it makes any warranties, representations or promises as to the quality, performance or freedom from defect of the products covered by this warranty. IMPLIED WARRANTIES OF MERCHANTABILITY AND FITNESS FOR A PARTICULAR PURPOSE, TO THE EXTENT APPLICABLE, SHALL BE LIMITED IN DURATION TO THE APPLICABLE ADJUSTMENT PERIOD SET FORTH HERE. THE PURCHASER'S ONLY REMEDIES IN CONNECTION WITH THE BREACH OR PERFORMANCE OF ANY WARRANTY ON JOHN DEERE BATTERIES ARE THOSE SET FORTH HERE. IN NO EVENT WILL THE DEALER, JOHN DEERE OR ANY COMPANY AFFILIATED WITH JOHN DEERE BE LIABLE FOR INCIDENTAL OR CONSEQUENTIAL DAMAGES. (Note: Some states do not allow limitations on how long an implied warranty lasts or the exclusion or limitation of incidental or consequential damages. So these limitations and exclusions may not apply to you.) This warranty gives you specific legal rights, and you may also have some rights which vary from state to state.

No Dealer Warranty

The selling dealer makes no warranty of it's own and the dealer has no authority to make any representation or promise on behalf of John Deere, or to modify the terms or limitations of this warranty in any way.

Pro Rata Months of Adjustment

Warranty Code	Warranty Period
A	40 Months
B	36 Months
C	24 Months

NOTE: If your battery is not labeled with a warranty code, it is a warranty code "B".

NR25796,0000324 -19-28JUL06-1/1

Identification Numbers

Identification Plates

Each tractor has the identification plates shown on these pages. The letters and numbers stamped on the plates identify a component or assembly. ALL these characters are needed when ordering parts or identifying a tractor or component for any John Deere product support program. Also, they are needed for law enforcement to trace your tractor if it is ever stolen. ACCURATELY record these characters in the spaces provided in each of the following photographs.

SD74272,00002CE -19-19JUL12-1/1

Product Identification Number

Product identification number (PIN) plate (A) is located on the left front support member of the tractor.

Record serial number below.

Tractor Serial Number_____

A—Serial Number Plate

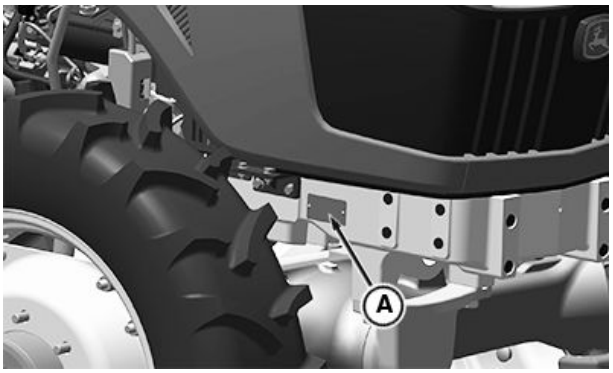

PY41756 —UN—04JUL17

HS35416,000015B -19-04JUL17-1/1

Record Front Axle (2-WD) Serial Number

The front-axle serial number plate (A) is located on rear side of right-hand axle housing.

Front Axle Serial Number_____

A—Front Axle Serial Number Plate

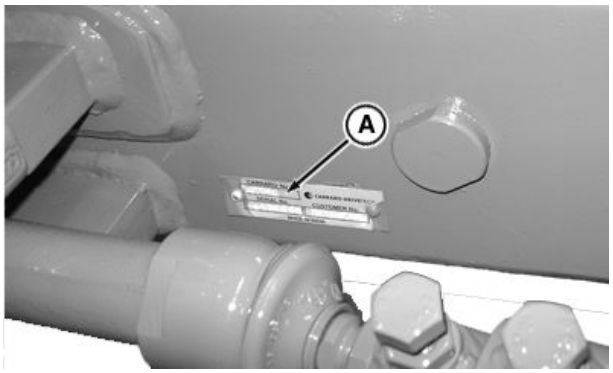

PY18069 —UN—26MAR13

SD74272,000073F -19-07APR14-1/1

Record Mechanical Front Wheel Drive (MFWD) Serial Number

The MFWD serial number plate (A) is located on the rear side of the right-hand axle housing.

MFWD Serial Number_____

A—MFWD Serial Number Plate

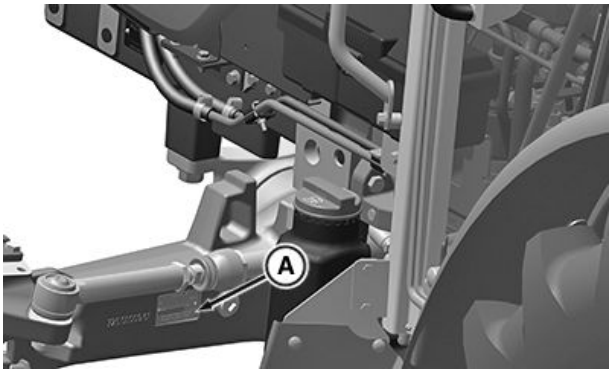

PY39753 —UN—07FEB17

HS35416,000015C -19-07FEB17-1/1

ROPS Serial Number

IMPORTANT: Ensure that ROPS serial number plate is visible all the time, DO NOT mount mirror on the certification plate.

ROPS serial number plate (A) is located on the ROPS (inner side).

Record serial number below.

ROPS Serial Number _____

A—ROPS Serial Number Plate

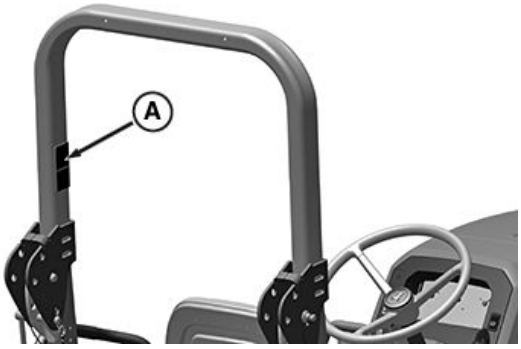

PY39754 —UN—07FEB17

HS35416,000015D -19-07FEB17-1/1

Record Engine Serial Number

Serial number plate (A) is located on the right-hand side of the engine block between the starter solenoid and the hydraulic pump.

Engine Serial Number_____

A—Engine Serial Number Plate

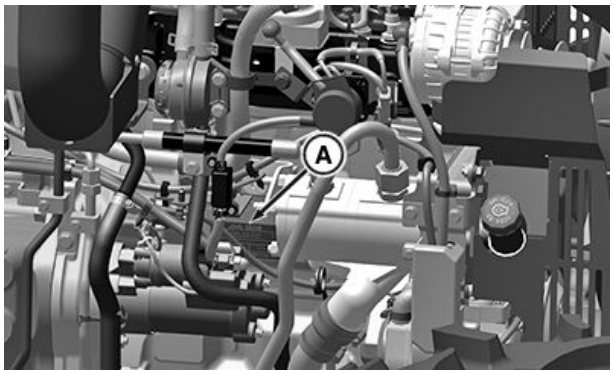

PY39755 —UN—07FEB17

HS35416,000015E -19-07FEB17-1/1

Fuel Injection Pump Serial Number

Serial number plate (A) is located on the side of pump.

Record serial number below.

Fuel Injection Pump Serial Number _____

A—FIP serial number plate

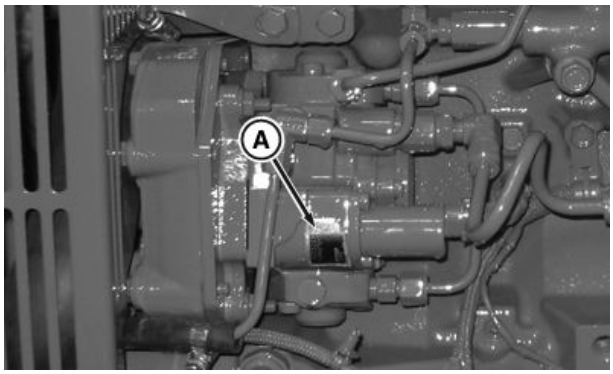

PY17812 —UN—26MAR13

SD74272,0000742 -19-07APR14-1/1

Cab Serial Number

Serial number is located on rear left-hand post.

Record serial number below.

Cab Serial Number _____

P12688 —UN—24NOV03

SD74272,00002E2 -19-19JUL12-1/1

Keep Proof of Ownership

1. Maintain in a secure location an up-to-date inventory of all product and component serial numbers.
2. Regularly verify that identification plates have not been removed. Report any evidence of tampering to law enforcement agencies and order duplicate plates.
3. Other steps you can take:
   - Mark your machine with your own numbering system
   - Take color photographs from several angles of each machine

TS1680 —UN—09DEC03

SD74272,00002D4 -19-19JUL12-1/1

Keep Machines Secure

1. Install vandal-proof devices.
2. When machine is in storage:
   - Lower equipment to the ground
   - Set wheels to widest position to make loading more difficult
   - Remove any keys and batteries
3. When parking indoors, put large equipment in front of exits and lock your storage buildings.
4. When parking outdoors, store in a well-lighted and fenced area.
5. Make note of suspicious activity and report any thefts immediately to law enforcement agencies.
6. Notify your John Deere dealer of any losses.

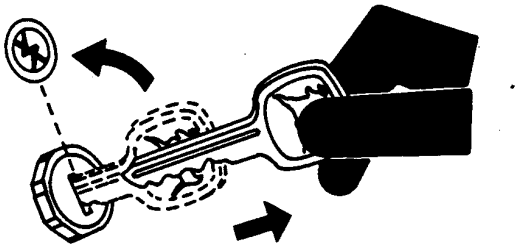

TS230 —UN—24MAY89

SD74272,00002D5 -19-19JUL12-1/1

Daily / 10 Hour Service Record

- Check engine oil level
- Check coolant level
- Drain water and sediment from fuel tank and fuel filter [1]
- Lubricate front axle pivot pins[2]
- Lubricate rear axle bearings[2]
- Lubricate tie rod ends(2WD)[2]
- Lubricate Steering Linkage(2WD)[2]

Hours					Hours				
Date					Date				
Hours					Hours				
Date					Date				
Hours					Hours				
Date					Date				
Hours					Hours				
Date					Date				
Hours					Hours				
Date					Date				
Hours					Hours				
Date					Date				
Hours					Hours				
Date					Date				
Hours					Hours				
Date					Date				
Hours					Hours				
Date					Date				
Hours					Hours				
Date					Date				

[1]The fuel filter must be drained when water or debris is evident in the sediment bowl. If this reoccurs more than three days in a row, then drain the sediment from the fuel tank. Run engine for a minimum of 20 seconds, re-check and if more water collects, drain the fuel tank.
[2]Only necessary in extremely wet or muddy conditions

SD74272,00004FF -19-26MAR13-1/1

Every 50 Hour Service Record

- Clean and check battery
- Inspect all tires
- Lubricate front axle pivot pins
- Check transmission-hydraulic system oil level
- Check MFWD axle hub oil level
- Inspect tractor for loose nuts and bolts
- Lubricate Steering Linkage(2WD)

Hours					Hours				
Date					Date				
Hours					Hours				
Date					Date				
Hours					Hours				
Date					Date				
Hours					Hours				
Date					Date				
Hours					Hours				
Date					Date				
Hours					Hours				
Date					Date				
Hours					Hours				
Date					Date				
Hours					Hours				
Date					Date				
Hours					Hours				
Date					Date				
Hours					Hours				
Date					Date				

SD74272,0000500 -19-26MAR13-1/1

First 100 Hours Service Record

☐ Replace transmission-hydraulic oil filter.
☐ Change engine break-in oil and filter.
☐ Inspect hose clamps on the air intake system & coolant system.

Date: _____

Hours: _____

SD74272,00002D8 -19-25MAR20-1/1

250 Hour Service Record

- Service air cleaner [1]
- Check oil level in MFWD axle and wheel hubs
- Inspect alternator/fan belt
- Lubricate 3-point hitch
- Check neutral start system
- Replace transmission-hydraulic filter
- Change engine oil[2]
- Adjust clutch free play [3]

Hours					Hours				
Date					Date				
Hours					Hours				
Date					Date				
Hours					Hours				
Date					Date				
Hours					Hours				
Date					Date				
Hours					Hours				
Date					Date				
Hours					Hours				
Date					Date				
Hours					Hours				
Date					Date				
Hours					Hours				
Date					Date				
Hours					Hours				
Date					Date				
Hours					Hours				
Date					Date				

[1]Service more often if operated in extremely dusty conditions.
[2]When using any lubricant other than TorqGARD or PLUS 50, service interval is 250 hours.
[3]For Mechanical dry clutch.

RP32883,0000A94 -19-21NOV19-1/1

500 Hour Service Record

- Replace engine oil and filter
- Replace fuel filters
- Clean operator enclosure/cab air filters [1]

Hours					Hours				
Date					Date				
Hours					Hours				
Date					Date				
Hours					Hours				
Date					Date				
Hours					Hours				
Date					Date				
Hours					Hours				
Date					Date				
Hours					Hours				
Date					Date				
Hours					Hours				
Date					Date				
Hours					Hours				
Date					Date				
Hours					Hours				
Date					Date				
Hours					Hours				
Date					Date				

[1] *Service more often if operated in extremely dusty conditions.*

RP32883,0000A95 -19-21NOV19-1/1

600 Hour Service Record

- Clean engine crankcase vent tube (OCV)
- Change MFWD axle and wheel hub oil
- Check cooling system for leaks
- Lubricate rear axle bearings
- Check engine idle speeds
- Check front axle pivot pin
- Re-pack front wheel bearing (2WD)

Hours					Hours				
Date					Date				
Hours					Hours				
Date					Date				
Hours					Hours				
Date					Date				
Hours					Hours				
Date					Date				
Hours					Hours				
Date					Date				

SD74272,0000501 -19-20NOV13-1/1

1200 Hour Service Record

- Change transmission-hydraulic oil and filter
- Clean transmission-hydraulic pickup screen
- Engine valve lash adjustment

Hours					Hours				
Date					Date				
Hours					Hours				
Date					Date				
Hours					Hours				
Date					Date				
Hours					Hours				
Date					Date				
Hours					Hours				
Date					Date				

SK35149,0000406 -19-21AUG14-1/1

Annual Service Record

- Change engine oil and filter
- Replace air cleaner elements
- Inspect seat belt
- Service Exhaust Filter
- Replace operator enclosure/cab air filters

Hours					Hours				
Date					Date				
Hours					Hours				
Date					Date				
Hours					Hours				
Date					Date				
Hours					Hours				
Date					Date				
Hours					Hours				
Date					Date				

SD74272,0000504 -19-26MAR13-1/1

2000 Hour / Two Year Service Record

- Drain, flush and refill engine cooling system [1]
- Adjust engine valve clearance [1]

Hours					Hours				
Date					Date				
Hours					Hours				
Date					Date				
Hours					Hours				
Date					Date				
Hours					Hours				
Date					Date				
Hours					Hours				
Date					Date				

[1] *See your John Deere dealer for service.*

SD74272,00002DE -19-23JAN13-1/1

As Required Service Record

Service as Required

- Adjust Hand Throttle Friction
- Inspect Engine Air Cleaner Elements
- Service Exhaust Filter
- Inspect Engine Air Intake System
- Check operator enclosure/cab air filters
- Service air-conditioning system
- Clean and Check Battery
- Clean Front Grille, Side Screens, Radiator, Condenser (cab) and Oil, Fuel or Air Coolers (if equipped)
- Drain water and sediment from fuel tank and fuel filter
- Replace Bulbs; Floodlights, Headlights, Tail/Turn Lights and Warning Lights
- Lubricate Operator Seat Slide Rails
- Adjust Headlights

Hours					Hours				
Date					Date				
Hours					Hours				
Date					Date				
Hours					Hours				
Date					Date				
Hours					Hours				
Date					Date				
Hours					Hours				
Date					Date				
Hours					Hours				
Date					Date				
Hours					Hours				
Date					Date				
Hours					Hours				
Date					Date				
Hours					Hours				
Date					Date				
Hours					Hours				
Date					Date				
Hours					Hours				
Date					Date				
Hours					Hours				
Date					Date				
Hours					Hours				
Date					Date				

SD74272,0000503 -19-26MAR13-1/1

Technical Information

Technical information can be purchased from John Deere. Some of this information is available in electronic media, such as CD-ROM disks, and in printed form. There are many ways to order. Contact your John Deere dealer. Call **1-800-522-7448** to order using a credit card. Search online from http://www.JohnDeere.com. Please have available the model number, serial number, and name of the product.

Available information includes:

- PARTS CATALOGS list service parts available for your machine with exploded view illustrations to help you identify the correct parts. It is also useful in assembling and disassembling.
- OPERATOR'S MANUALS providing safety, operating, maintenance, and service information. These manuals and safety signs on your machine may also be available in other languages.
- OPERATOR'S VIDEO TAPES showing highlights of safety, operating, maintenance, and service information. These tapes may be available in multiple languages and formats.
- TECHNICAL MANUALS outlining service information for your machine. Included are specifications, illustrated assembly and disassembly procedures, hydraulic oil flow diagrams, and wiring diagrams. Some products have separate manuals for repair and diagnostic information. Some components, such as engines, are available in separate component technical manuals
- FUNDAMENTAL MANUALS detailing basic information regardless of manufacturer:
  - Agricultural Primer series covers technology in farming and ranching, featuring subjects like computers, the Internet, and precision farming.
  - Farm Business Management series examines "real-world" problems and offers practical solutions in the areas of marketing, financing, equipment selection, and compliance.
  - Fundamentals of Services manuals show you how to repair and maintain off-road equipment.
  - Fundamentals of Machine Operation manuals explain machine capacities and adjustments, how to improve machine performance, and how to eliminate unnecessary field operations.

TS189 —UN—17JAN89

TS191 —UN—02DEC88

TS224 —UN—17JAN89

TS1663 —UN—10OCT97

SD74272,0000224 -19-27JUN12-1/1

John Deere Service

John Deere Parts

We help minimize downtime by putting genuine John Deere parts in your hands in a hurry. That's why we maintain a large and varied inventory to meet your spare parts needs.

TS100 —UN—23AUG88

PY00013,0000003 -19-14JUN01-1/1

The Right Tools

Precision tools and testing equipment enable our Service Department to locate and correct troubles quickly. They save your time and money.

TS101 —UN—23AUG88

PY00013,0000004 -19-14JUN01-1/1

Well Trained Technician

School is never out for John Deere service technicians. Training schools are held regularly to be sure our personnel know your equipment and how to maintain it.

Result?

Experience you can count on!

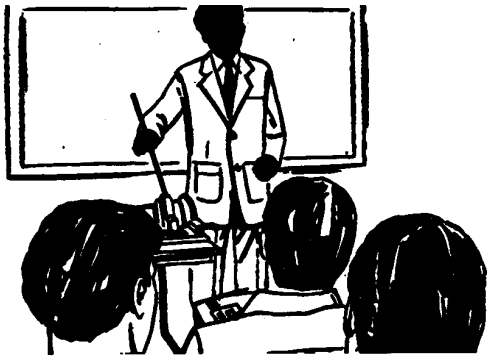

TS102 —UN—23AUG88

PY00013,0000005 -19-14JUN01-1/1

Prompt Service

Our goal is to provide prompt, efficient care when you want it and where you want it. We can make repairs at your place or at ours, depending on the circumstances.

see us, depend on us.We'll be around when you need us.

TS103 —UN—23AUG88

PY00013,0000006 -19-14JUL20-1/1

John Deere Is At Your Service

CUSTOMER SATISFACTION is important to John Deere.

Our dealers strive to provide you with prompt, efficient parts and service:

–Maintenance and service parts to support your equipment.

–Trained service technicians and the necessary diagnostic and repair tools to service your equipment.

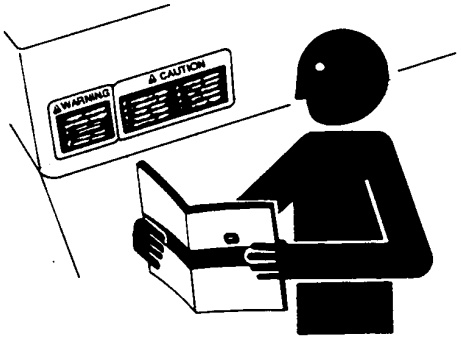

TS201 —UN—15APR13

CUSTOMER SATISFACTION PROBLEM RESOLUTION PROCESS

Your John Deere dealer is dedicated to supporting your equipment and resolving any problem you may experience.

1. When contacting your dealer, be prepared with the following information:

–Machine model and product identification number

–Date of purchase

–Nature of problem

2. Discuss problem with dealer service manager.

3. If unable to resolve, explain problem to dealership manager and request assistance.

4. If you have a persistent problem your dealership is unable to resolve, ask your dealer to contact John Deere for assistance. Or contact the Ag Customer Assistance Center at 1-866-99DEERE (866-993-3373) or e-mail us at www.deere.com/en_US/ag/contactus/.

DX,IBC,2 -19-02APR02-1/1

Index

Page

A

Accessory electrical outlets
  Cab ... 26-3
Adjust rockshaft speed-of-drop
  Implement lock ... 55-6
Air conditioner, service ... 95-12
Air conditioning
  Performance, optimizing ... 26-7
Air conditioning system
  Troubleshooting ... 120-11
Air filters, cab, clean ... 95-10
Air intake filters
  Inspect ... 95-1
  Replace ... 95-3
Air intake system, inspect ... 95-4
Alternator wiring
  Connect ... 115-12
Alternator/fan belt
  Inspect and adjust (5410 and 5510) ... 115-2
  Replace ... 115-2
Attach implements to three point hitch ... 55-8
Attach PTO-Driven Implement ... 65-4
Automatic (AUTO) Exhaust Filter Cleaning ... 40-19
Avoid static electricity risk when fueling ... 05-4

B

Ballast ... 70-1
  Front end for transport ... 70-3
  Limitations ... 70-3
  Liquid weight ... 70-6
  Maximum front ... 70-4
  Maximum rear ... 70-4
  Selecting ... 70-1
  Two-wheel drive tractors ... 70-3
Ballast weight
  Torque values ... 95-6
Battery
  Booster or charger, using ... 40-16
  Charging ... 115-3
  Clean ... 115-3
  Inspection ... 115-4
  Remove ... 115-5
  Replacement ... 115-6
  Service ... 115-7
  Specifications ... 115-6
  Warranty ... 130-20
Battery Handling, Safety
  Safety, Battery Handling ... 05-15
Before starting the engine ... 40-2, 40-3
Biodiesel fuel ... 85-5
Blower speed (cab), adjusting ... 26-5
Bolt and screw torque values
  Metric ... 130-7
  Unified inch ... 130-8

Page

Bolts
  Front axle, tighten ... 75-4
Brakes
  Use ... 50-11
Brakes troubleshooting ... 120-7
Break-in engine oil
  Interim tier 4, final tier 4, stage IIIB, stage IV, and stage V ... 85-13
Break-in service ... 30-2

C

Cab
  A/C and heater performance, optimizing ... 26-7
  Air filters, clean ... 95-10
  Blower speed, adjusting ... 26-5
  Controls
    Lights ... 20-2
  Courtesy light ... 26-11
  Dome light ... 26-11
  Heater and A/C performance, optimizing ... 26-7
  Lights ... 20-2
    Floodlights ... 20-7
    Tail lights ... 20-8
    Warning lights ... 20-11
  Mounting ... 95-14
  Mounting hardware
    Torque values ... 95-6
  Serial number ... 135-3
  Temperature, controlling ... 26-6
  Windshield, deicing, demisting or defrosting ... 26-6
  Wiper, operating
    Windshield ... 26-7
Cable
  PTO clutch
    Adjust ... 65-10
Cables and harnesses, routing (Cab) ... 26-8
Capacities, drain and refill ... 130-3
Cassette player
  Operating ... 26-10
Cast iron weights ... 70-4
  Install rear ... 70-5
CD player
  Operating ... 26-10
Center link
  Position ... 55-8
Change Engine Oil and Filter ... 100-2
Check Toe-In ... 75-12
Clock, setting (cab) ... 26-9
Clutch
  PTO Cable
    Adjust ... 65-10
Clutch pedal free play
  Check and adjust ... 90-5
Connect single acting cylinder ... 60-8
Control lever and coupler identification ... 60-2, 60-3

Continued on next page

Page

Controls
Instrument panel 15-1, 15-3, 15-9
Lights 20-2
Overhead control panel (Cab)..... 15-12
Controls illumination light bulb, replacing (Cab) 115-20
Controls, Information Display
Roll Mode Switch 15-11
Coolant
Diesel engine
Engine with wet sleeve cylinder liners..... 85-14
John deere COOL-GARD II coolant extender..... 85-15
Level, checking 105-4
Mixing with concentrate, water quality 85-15
Testing freeze point..... 85-16
Warm temperature climates 85-1
Cooling system
Alternator/fan belt, replace.....115-2
Check for leaks 105-4
Flush 105-5
Flush every two years 105-6
Thermostat, replace 105-5
Winterize 105-7
CoolScan 85-20
Correct hose tips 60-1
Courtesy light (cab) 26-11
Crankcase
Vent tube, cleaning 95-4
Cylinder hoses, disconnect..... 60-12
Cylinder stop, adjust 60-12
Cylinder, extend/retract
No. 1 SCV..... 60-10

D

DEF
Disposal 85-9
Storing..... 85-10
Tank, refilling 85-9
Testing..... 85-10
Use in SCR equipped engines..... 85-8
Deluxe SCV
Troubleshooting 120-7
Diesel engine oil
Interim tier 4, final tier 4, stage IIIB, stage IV, and stage V 85-11
Diesel engines, cold weather effect..... 85-4
Diesel fuel..... 85-3
Diesel Particulate Filter
Maintenance and Service 95-5
Diesel Particulate Filter Maintenance and Service 95-5
Differential lock
Use..... 50-12
Disabled Exhaust Filter Cleaning 40-20
Disposal, Exhaust Filter..... 95-6
Dome light
Troubleshooting 120-14
Dome light (cab)
Using.....26-11

Page

Door, opening (Cab) 26-4
Draft control, use 55-5
Drain and refill capacities 130-3
Drawbar 65-2
Load limitations 65-1
Swinging 65-1
Driving on public roads 50-2, 80-2

E

Effect of cold weather on diesel engines 85-4
Electrical
Battery
Charging.....115-3
Clean.....115-3
Inspection.....115-4
Remove.....115-5
Replacement 115-6
Service 115-7
Specifications 115-6
Fuses
Location.....115-8
Fusible link 115-11
Lights
Cab dome light 115-20
Headlights
Adjustment.....115-14
Aim.....115-16
Bulb.....115-13
Tail lights
Cab 115-18
Turn signal
Cab 115-18
Warning lights
Cab 115-17
Warnings.....115-1
Electrical outlets, accessories
Cab 26-3
Electrical system troubleshooting 120-10
Emergency exit (cab)..... 50-6
Emergency exit (Cab)..... 26-5
Engine
Changing speed..... 40-10
Coolant heater, using 40-7
Crankcase
Vent tube, cleaning..... 95-4
Idle speeds..... 95-5
Indicators and gauges, checking 40-8
Speeds and operating procedures (recommended).....40-11
Stopping..... 40-13, 40-15
Thermostat, replace 105-5
Troubleshooting 120-1
Engine air intake filters
Inspect 95-1
Replace..... 95-3
Engine air intake system, inspect 95-4
Engine compartment, cleaning 95-12

Continued on next page

Page

Engine oil
Break-In
Interim tier 4, final tier 4, stage IIIB, stage IV, and stage V 85-13
Diesel
Interim tier 4, final tier 4, stage IIIB, stage IV, and stage V 85-11
Engine oil and filter service intervals
Interim tier 4, final tier 4, stage IIIB, stage IV, and stage V
0.12 L/kW or greater oil pan 85-12
Engine Oil level Check 100-1
Engine operation
Break-in..... 30-1
Engine speed
Changing..... 40-10
Exhaust Filter
Ash Handling and Disposal..... 95-6
Exhaust Filter Aftertreatment
Filter, Exhaust 95-5
Exhaust Filter Ash Handling and Disposal
Diesel Particulate Filter Ash Handling and Disposal 95-6
Exhaust Filter Disposal..... 95-6
Exhaust Filter System Overview..... 40-17
Exhaust Filter, Safety
Safety, Exhaust Filter 05-18

F

Fan/alternator belt
Replace.....115-2
Filters
Air
Clean 95-10
Engine air intake
Inspect..... 95-1
Replace 95-3
Filters, Oil
Oil Filters..... 85-13
Floodlights
Cab
Using 20-7
OOS
Using 20-6
Troubleshooting 120-14
Front axle
Wheel bearings, lubricate 100-10
Front Axle
Steering linkage, lubricate..... 100-6
Front axle pivot pin
Lubricate 100-6
Fuel
Biodiesel 85-5
Diesel 85-3
Fill tank..... 85-7
Handling and storing 85-2
Storage 85-1

Page

Warning.....110-1
Fuel cooler, clean 105-1, 105-2
Fuel filters
Drain water and sediment.....110-1
Replace
Primary 110-3
Fuel injection pump
Serial number..... 135-2
Fuel system 110-1
Bleed.....110-4
Fuel tank
Drain water and sediment.....110-2
Fuels and lubricants 85-1
Fuses
Location 115-8
Fusible Link 115-11

G

Gear case oil 85-18
Grease
Multipurpose Extreme Pressure (EP) 85-18
Grille screens, clean..... 105-1, 105-2
Ground speed estimates 130-6
Correction factors for other tires 130-6

H

Hand throttle friction, adjust..... 95-8
Hardware
Wheel/axle, tighten 75-3
Hardware torque values
Metric 130-7
Unified inch 130-8
Harnesses and cables, routing (Cab)..... 26-8
Heater
Performance, optimizing 26-7
Heating system
Troubleshooting 120-11
High beam indicator..... 20-5
Hillside operation 50-6
Hitch
Adjust side sway 55-11
Attach implements to 55-8
Components..... 55-1
Leveling..... 55-12
Hitch, lubricate..... 100-7
Hood latch, lubricate.....100-11
Hood, opening 95-1
Hose clamps, tighten 95-6
Hydraulic cylinder hoses, connect 60-5
Hydraulic oil 85-17, 85-18
Hydraulic system
Power beyond, use 60-11
Hydraulic system design
Incompatibility, continuous hydraulic motor use..... 60-1
Hydraulic system troubleshooting..... 120-6

Continued on next page

Page

Hydraulic-transmission system oil, warming..... 60-1
Hydraulics
  Oil
    Level, check 100-3

I

Identification numbers 135-1
Idle speeds 95-5
Implement codes 70-7
Implement to tire clearance 75-1
Implement, prepare 55-7
Infinitely variable shuttle, using (if equipped)..... 50-10
Inside rear view mirror (Cab) 26-5
Instrument panel.....15-1, 15-3, 15-5, 15-7, 15-9

K

Key Switch..... 40-1

L

Label, certification
  Emissions control system 130-9
Lateral float, adjust 55-13
Light switch
  Operation 20-1
Lighting
  Tail Light Replacement.....115-18
  Work Light Bulb Replacement 115-19
Lighting and signals..... 20-1
Lights 20-2
  Cab dome light.....115-20
  Floodlights
    Cab..... 20-7
    OOS 20-6
  Halogen light bulbs
    Handling safely.....115-13
  Headlights
    Adjustment 115-14
    Aim 115-16
    Bulb 115-13
  Rotating beacon light
    Cab..... 20-13
  Tail lights
    Cab..... 20-8, 115-18
    OOS 20-8
  Turn signal
    Cab.....115-18
  Warning lights
    Cab.....20-11, 115-17
    OOS 20-8
Lubricant
  Mixing..... 85-19
Lubricant Storage
  Storage, Lubricant..... 85-8, 85-19

Page

Lubricants, correct
  Using..... 100-1
Lubricants, safety 85-8, 85-19

M

Metric bolt and screw torque values 130-7
MFWD axle
  Housing
    Oil level, check 100-9
    Oil, change 100-9
  Toe-In
    Adjust 75-13
  Wheel bolts, tighten 75-5
  Wheel hub
    Oil level, check 100-8
    Oil, change 100-8
Mid-mount SCV cylinder hoses, connect..... 60-6
Mirror, inside rear view (Cab) 26-5
Mixing lubricants..... 85-19
Monitor locations, installing 26-11
Multi-function control
  Lever and couplers identification 60-4
Multipurpose Extreme Pressure (EP) grease 85-18

N

Neutral lever position..... 60-9
Neutral start system, check
  PowrReverser transmission (if equipped)..... 95-7

O

Oil
  Engine
    Interim tier 4, final tier 4, stage IIIB,
      stage IV, and stage V 85-11
  Gear case 85-18
  Hydraulic..... 85-17, 85-18
  Steering..... 85-18
  Transmission..... 85-17, 85-18
  Transmission-hydraulic
    Level, check 100-3
  Warm hydraulic system..... 55-13
Oil cooler, clean 105-1, 105-2
Oil, transmission-hydraulic system
  Warming..... 60-1
Oilscan..... 85-20
OOS
  Lights
    Floodlights..... 20-6
    Tail lights..... 20-8
    Warning lights..... 20-8
Operate foldable ROPS..... 25-1
Operator training..... 50-1
Overhead control panel (Cab) 15-12

Continued on next page

Page

P

Paint care 125-3
Parked Exhaust Filter Cleaning 40-21
Position center link 55-8
Position control lever stop, setting 55-3
Position control, use 55-4
Power beyond attachment, use 60-11
Power reverser transmission (PRT) (if equipped)
  Infinity varialbe shuttle 50-10
PowrReverser transmission (PRT) (if equipped), operating 50-7
Prepare implement 55-7
Prestart checks 35-1
PTO
  Attach Implements 65-4
  Clutch Cable
    Adjust 65-10
  Operating 65-5, 65-7
  Select Correct Speed 65-9
PTO Speed Selection 65-9

R

Radiator, clean 105-1, 105-2
Radio 26-8
Rear axle
  Bearings, lubricate 100-10
Rear axle wheel bolts
  Bolts, tighten 75-5
Refueling, avoid static electricity risk 05-4
Remote hydraulic cylinders troubleshooting 120-9
Reversed cylinder response, correct 60-9
Ride comfort, adjust 25-3
Rockshaft
  Postion control 55-4
  Rate-of-drop adjustment 55-6
Rockshaft and quick-coupler 3-point hitch troubleshooting 120-8
Rockshaft control levers 55-2
ROPS 95-13
  Operate foldable 25-1
  Torque values 95-6
Rotating beacon light (cab)
  Bulb, replacing 115-21
  Operating 20-13

S

Safety
  Protect against noise 05-2
  Rotating drivelines, stay clear 05-6, 65-3
  Safe maintenance, practice 05-17
  Tires, service safely 05-21
  Towed equipment, transport at safe speeds 05-11
  Tractor, operating safely 05-8
  Use caution on slopes, uneven terrain, and rough ground 05-12
Safety, Avoid High-Pressure Fluids
  Avoid High-Pressure Fluids 05-22
Safety, Fire Prevention
  Fire Prevention 05-3
Safety, Forestry Operations
  Limited Use in Forestry Operation 05-9
Safety, Handle Fuel Safely, Avoid Fires
  Avoid Fires, Handle Fuel Safely 05-3
Safety, lubricants 85-8, 85-19
Safety, ROPS
  ROPS, Keep Installed Properly 05-5
Safety, Steps and Handholds
  Use Steps and Handholds Correctly 05-6
Safety, Tightening Wheel Retaining Bolts/Nuts
  Tightening Wheel Retaining Bolts/Nuts 05-22
Seat
  Adjusting
    Cab
      Mechanical suspension 26-2
Seat belt, inspect 95-8
Seat belt, use 25-2
Seat belt, using
  Cab 26-1
Seat slide rails, lubricate (OOS) 100-10
Seat, standard
  Select position 25-2
Select a gear 50-10
Serial number
  Cab 135-3
  Fuel injection pump 135-2
Service
  10 Hours
    Engine Oil Level Check 100-1
  1200 hours 100-4
  500 Hours
    Change Engine Oil and Filter 100-2
  First 100 Hours
    Change Engine Oil and Filter 100-2
Service Exhaust Filter Cleaning 40-23
Service intervals
  Observance 90-4
Service intervals chart
  500 hours / 1000 hours / Annually / 2000 hours or two years / 5000 hours or five years 90-3
  Daily or 10 / Weekly or 50 / FIRST 100 / 250 hours 90-2
Service record
  1000 hours 140-4, 140-5
  2000 hours / two years 140-6
  250 hours 140-3
  500 hours 140-4
  Annual 140-5
  Daily / 10 hours 140-1
  Weekly / 50 hours 140-2
Service records
  First 100 hours 140-2

Continued on next page

Page

Service safely ... 90-1
Service, as required ... 90-3
Seven-terminal outlet ... 20-12
Signal words, understand ... 05-1
Signals ... 20-1
Specifications
  Drain and refill capacities ... 130-3
  Machine ... 130-1
  Permissible load ... 130-4
Speed/hour meter ... 40-11
Starter wiring, connect ... 115-12
Starting
  Check instruments after ... 40-9
Starting the engine ... 40-4
Steering
  Linkage, lubricate ... 100-6
Steering oil ... 85-18
Steering stops (MFWD), set ... 75-14
Steering wheel, adjusting
  Cab ... 25-2, 26-2
Stop/Operator Alert
  Indicator ... 40-9
Storage
  Long-term ... 125-1
  Remove from storage ... 125-3
Storing fuel ... 85-2
Sun visor (Cab) ... 26-5

T

Tail lights
  Cab
    Using ... 20-8
  OOS
    Using ... 20-8
Temperature, controlling ... 26-6
Thermostat, replace ... 105-5
Three-point hitch, lubricate ... 100-7
Throttle friction, adjust ... 95-8
Tires
  Combinations ... 75-15
  Compatibility chart ... 75-15
  Front, rolling direction ... 75-3
  Inflation pressure ... 75-2
  Inflation pressure chart ... 75-2
  Inspect ... 95-9
Tires, service safely ... 05-21
Tires, tubeless
  Repair ... 95-9
Toe-in
  Adjust
    MFWD axle ... 75-13
Toe-in, 2-WD tractor
  Adjust ... 75-12
Toe-in, MFWD tractor
  Check ... 75-13
Torque charts
  Metric ... 130-7
  Unified inch ... 130-8
Torque values
  Adjustable front axle ... 75-4
  Ballast weight ... 95-6
  Cab mounts ... 95-6
  Front axle ... 95-6
  MFWD axle wheel bolts ... 75-5
  Rear axle ... 95-6
  Rear wheels ... 95-6
  ROPS ... 95-6
  Wheel bolts rear axle ... 75-5
  Wheels/axles ... 75-3
Towed equipment, transport at safe speeds ... 05-11
Towing
  Tractor ... 80-6
Tractor PTO
  Operating ... 65-5, 65-7
Tractor service
  Safely ... 90-1
Tractor, operating safely ... 05-8
Tractor, stopping ... 50-14, 50-15
Transmission
  Oil
    Level, check ... 100-3
  Operating
    PowrReverser transmission (PRT) (if equipped) ... 50-7
      Infinity varialbe shuttle ... 50-10
Transmission oil ... 85-17, 85-18
Transmission troubleshooting ... 120-5
Transmission-hydraulic filter element ... 85-17
Transmission-hydraulic system
  Change oil and filter ... 100-4
  Clean pickup screen ... 100-5
Transmission-hydraulic system oil, warming ... 60-1
Transport ... 80-5
Transporting
  Tractor, towing ... 80-6
Tread settings
  Adjustable front axle ... 75-9
  Multi-position MFWD wheels ... 75-10
  Multi-position rear wheels ... 75-7
  Two-position rear wheels ... 75-6
Tread width
  Adjusting front axle ... 75-11
  Rear wheel limitations ... 75-5
Troubleshooting
  Brakes ... 120-7
  Deluxe SCV ... 120-7
  Electrical system ... 120-10
  Engine ... 120-1
  Floodlights and dome light ... 120-14
  Heater and A/C system ... 120-11
  Hydraulic system ... 120-6
  Quick-coupler 3-point hitch ... 120-8
  Radio ... 120-14
  Remote hydraulic cylinders ... 120-9
  Rockshaft ... 120-8
  Transmission ... 120-5

Continued on next page

Page

Wiper(s) 120-14
Turn signals 20-9

U

Unified inch bolt and screw torque values 130-8
Use
Brakes 50-11
Cast iron weights 70-4
Differential lock 50-12
Draft control 55-5
Position control 55-4
Turn signals 20-9
Warning lights 20-10
Use Operator's Manual Holder 25-3
Using Headlights — Cab 20-4
Using Headlights — OOS 20-3

V

Vent tube
Cleaning 95-4

W

Warm hydraulic system oil 55-13

Page

Warning lights 20-10
Cab
Using 20-11
Warranty
Non-road emissions control warranty statement--compression ignition
CARB 130-10
EPA 130-18
Warranty, battery 130-20
Weights
Cast iron 70-4
Install rear cast iron 70-5
Wheel Bolts, tighten
MFWD axle 75-5
Rear axle 75-5
Wheel slip
Measuring manually 70-2
Windows, opening (Cab) 26-4
Windshield wiper
Operating 26-7
Windshield, deicing, demisting or defrosting 26-6
Wiper(s)
Troubleshooting 120-14